Motion Control Engineering, Inc.
11380 White Rock Road
Rancho Cordova, CA 95742

voice 916 463 9200
fax 916 463 9201
www.mceinc.com

IntellaNet Car Control
Magnetek DSD 412 DC Drive
Magnetek HPV 900 AC Vector Drive
KEB F5 AC VVVF Drive
Amicon Regulator

Manual # 42-95-0004, Rev C6, June 2014

Copyright

© 2014, Motion Control Engineering. All Rights Reserved.
This document may not be reproduced, electronically or mechanically, in whole or in part, without written permission from Motion Control Engineering.

Trademarks

All trademarks or registered product names appearing in this document are the exclusive property of the respective owners.

Warning and Disclaimer

Although every effort has been made to make this document as complete and accurate as possible, Motion Control Engineering and the document authors, publishers, distributors, and representatives have neither liability nor responsibility for any loss or damage arising from information contained in this document or from informational errors or omissions. Information contained in this document shall not be deemed to constitute a commitment to provide service, equipment, or software by Motion Control Engineering or the document authors, publishers, distributors, or representatives.

Limited Warranty

Motion Control Engineering (manufacturer) warrants its products for a period of 15 months from the date of shipment from its factory to be free from defects in workmanship and materials. Any defect appearing more than 15 months from the date of shipment from the factory shall be deemed to be due to ordinary wear and tear. Manufacturer, however, assumes no risk or liability for results of the use of the products purchased from it, including, but without limiting the generality of the forgoing: (1) The use in combination with any electrical or electronic components, circuits, systems, assemblies or any other material or equipment (2) Unsuitability of this product for use in any circuit, assembly or environment. Purchasers' rights under this warranty shall consist solely of requiring the manufacturer to repair, or in manufacturer's sole discretion, replace free of charge, F.O.B. factory, any defective items received at said factory within the said 15 months and determined by manufacturer to be defective. The giving of or failure to give any advice or recommendation by manufacturer shall not constitute any warranty by or impose any liability upon the manufacturer. This warranty constitutes the sole and exclusive remedy of the purchaser and the exclusive liability of the manufacturer, AND IN LIEU OF ANY AND ALL OTHER WARRANTIES, EXPRESSED, IMPLIED, OR STATUTORY AS TO MERCHANTABILITY, FITNESS, FOR PURPOSE SOLD, DESCRIPTION, QUALITY PRODUCTIVENESS OR ANY OTHER MATTER. In no event will the manufacturer be liable for special or consequential damages or for delay in performance of this warranty.

Products that are not manufactured by MCE (such as drives, CRTs, modems, printers, etc.) are not covered under the above warranty terms. MCE, however, extends the same warranty terms that the original manufacturer of such equipment provide with their product (refer to the warranty terms for such products in their respective manual).

End User License Agreement

This End User License Agreement (“Agreement”) grants you the right to use the software contained in this product (the “Software”) subject to the following restrictions: You may not: (i) copy the Software, except for archive purposes consistent with your standard archive procedures; (ii) transfer the Software to a third party apart from the entire product; (iii) modify, decompile, disassemble, reverse engineer or otherwise attempt to derive the source code of the Software; (iv) export the Software or underlying technology in contravention of applicable U.S. and foreign export laws and regulations; and (v) use the Software other than in connection with operation of the product.

“LICENSOR'S SUPPLIERS DO NOT MAKE OR PASS ON TO END USER OR ANY OTHER THIRD PARTY, ANY EXPRESS, IMPLIED OR STATUTORY WARRANTY OR REPRESENTATION ON BEHALF OF SUCH SUPPLIERS, INCLUDING BUT NOT LIMITED TO THE IMPLIED WARRANTIES OF NON-INFRINGEMENT, TITLE, MERCHANTABILITY OR FITNESS FOR A PARTICULAR PURPOSE.”

Important Precautions and Useful Information

This preface contains information that will help you understand and safely maintain MCE equipment. We strongly recommend you review this preface and read this manual before installing, adjusting, or maintaining Motion Control Engineering equipment. This preface discusses:

- Safety and Other Symbol Meanings
- Safety Precautions
- Environmental Considerations
- In This Guide

Safety and Other Symbol Meanings

Danger

This manual symbol is used to alert you to procedures, instructions, or situations which, if not done properly, might result in personal injury or substantial equipment damage.

Caution

This manual symbol is used to alert you to procedures, instructions, or situations which, if not done properly, might result in equipment damage.

Note

This manual symbol is used to alert you to instructions or other immediately helpful information.

Safety Precautions

Danger

This equipment is designed to comply with ASME A17.1, National Electrical Code, CE, and CAN/CSA-B44.1/ASME-A17.5 and must be installed by a qualified contractor. It is the responsibility of the contractor to make sure that the final installation complies with all local codes and is installed in a safe manner.

This equipment is suitable for use on a circuit capable of delivering not more than 10,000 rms symmetrical amperes, 600 volts maximum. The three-phase AC power supply to the Drive Isolation Transformer used with this equipment must originate from a fused disconnect switch or circuit breaker sized in conformance to all applicable national, state, and local electrical codes in order to provide the necessary motor branch circuit protection for the Drive Unit and motor. Incorrect motor branch circuit protection will void the warranty and may create a hazardous condition.

Proper grounding is vitally important to safe and successful operation. Bring your ground wire to the system subplate. You must choose the proper conductor size and minimize the resistance to ground by using the shortest possible routing. See National Electrical Code Article 250-95 or the applicable local electrical code.

Before applying power to the controller, physically check all the power resistors and other components located in the resistor cabinet and inside the controller. Components loosened during shipment may cause damage.

For proper operation of the AC Drive Unit in your controller, you must make sure that: 1) A direct solid ground is provided in the machine room to properly ground the controller and motor. Indirect grounds such as the building structure or a water pipe may not provide proper grounding and could act as an antenna to radiate RFI noise, thus disturbing sensitive equipment in the building. Improper grounding may also render any RFI filter ineffective. 2) The incoming power to the controller and the outgoing power wires to the motor are in their respective, separate, grounded conduits.

This equipment may contain voltages as high as 1000 volts. Use extreme caution. Do not touch any components, resistors, circuit boards, power devices, or electrical connections without ensuring that high voltage is not present.

Elevator control products must be installed by experienced field personnel. This manual does not address code requirements. The field personnel must know all the rules and regulations pertaining to the safe installation and running of elevators.

Environmental Considerations

- Keep the machine room clean.
- Controllers are generally in NEMA 1 enclosures.
- Do not install the controller in a dusty area.
- Do not install the controller in a carpeted area.
- Keep room temperature between 32 and 104 degrees F (0 to 40 degrees C).
- Prevent condensation on the equipment.
- Do not install the controller in a hazardous location or where excessive amounts of vapors or chemical fumes may be present.
- Make certain that power line fluctuations are within plus or minus 10% of proper value.

Air Conditioned Equipment Cabinets

If your control or group enclosure is equipped with an air conditioning unit, it is very important to observe the following precautions. (Failure to do so can result in moisture damage to electrical components.)

- Maintain the integrity of the cabinet by using sealed knockouts and sealing any holes made during installation.
- Do not run the air conditioning while the cabinet doors are open.
- If you turn the air conditioner off while it is running, wait at least five minutes before restarting it. Otherwise, the compressor may be damaged.
- Observe the recommended thermostat setting (75 degrees) and follow recommended maintenance schedules.
- Make certain that the air conditioning drain tube remains clear to avoid water accumulation in the unit.

In This Manual:

This manual is the installation, adjustment, and troubleshooting guide for the IntellaNet car control. When viewed online as a pdf file, hyperlinks (buttons or blue text) link to related topics and informational websites. The manual includes:

- Contents: Table of Contents. When viewed online as a pdf file, hyperlinks in the Contents link to the associated topic in the body of the manual.
- Section 1. General Information
- Section 2. Installation
- Section 3. PC Boards
- Section 4. Magnetek DSD 412
- Section 5. Magnetek HPV 900
- Section 6. KEB F5 Drive
- Section 7. Amicon Regulator
- Section 8. Terminal Slowdowns & ETSL System
- Section 9. Load Weigher & Pretorque
- Section 10. Diagnostics & Parameter Entry
- Section 11. Sequence of Operation
- Section 12. Dispatching
- Section 13. Testing
- Index: Alphabetical index to help you find information in the manual. When viewed online as a pdf file, index entry page references are hyperlinks to the associated information in the body of the manual.

Important Information

Beginning with the release of Intellanet Relay Board (OT-M00396) software RELAY REV 1.21, 08/07/07, we have changed two system features that affect cars set to a high inspection speed or high speed / high acceleration/deceleration rate cars.

Inspection Speed

Problem: Cars set to a high inspection speed would sometimes fail to stop at a terminal landing before opening the final limit switches. (Open final limits would then prevent the car from moving.)

Solution: On inspection, when the car opens the last slowdown switch before the floor (US-4 up or DS-4 down), it will automatically slow to twenty feet per minute (20 FPM). This automatic slowing prevents the car from opening the final limit.

Construction Operation: When initially starting the car, if the terminal switches have not been installed, you will need to temporarily install jumpers from AC2 to U4 and D4 switch inputs respectively if you want an inspection speed higher than 20 feet per minute.

High Profile or High Speed Cars

Problem: When cars using high acceleration/deceleration rates and/or running at high speeds approached a terminal landing, the alternate deceleration rate (NTS) would sometimes “kick in” to help the normal deceleration rate slow the car.

Solution: Initially set the NTS deceleration rate (TERMINAL SLOWDOWNS screen) to 0.5 feet per second^2 higher than the highest acceleration rate set on the MOTION PARAMETERS screen for the performance or economy curve being used (former recommendation 0.25 fps^2 higher). The ETS deceleration rate must also be set high enough to allow the car to test for and apply/not apply NTS slowdown. Initially set ETS deceleration to 7.0 fps^2.

Confirmation: After the car has been fully adjusted and after terminal limits have been learned, ride the car to see that NTS does not interfere to more abruptly decelerate the car on approach to terminal landings and that ETS (system dropping power to motor and brake to cause immediate stop) does not occur.

If interference occurs, increase NTS deceleration rate one tenth (i.e., 0.5 fps^2 greater than the highest acceleration rate to 0.6 fps^2 greater than the highest acceleration rate) and again ride the car to see that NTS deceleration does not interfere with normal deceleration. If ETS invoked emergency stop, also increase that setting in one tenth increments.

Note

If it was necessary to increase the NTS and/or ETS deceleration rate, you do not have to perform a limit switch learn again but you will have to cycle power to the controller so that it may read the new settings as it powers up.

Contents

Section 1. IntellaNet General Information

In This Section 1-1

IntellaNet by MCE 1-2
- Car Controller 1-3
- Car Station 1-4
- Cartop Station 1-4
- Dispatcher 1-5

Personal Safety 1-6

Equipment Safety 1-7

Section 2. Installation

In This Section 2-1

Installation Considerations 2-2
- Piping and Wiring 2-3
  - How Electrical Noise Occurs 2-3
  - How to Avoid Electrical Noise Problems 2-3
  - Possible EMI / RFI Interference 2-3
  - Tach Generator Wiring 2-4
  - Low Voltage Signal Wiring 2-4
  - High Power Wiring 2-4
  - Traveling Cable Wiring 2-4
  - Car Top Encoder Wiring 2-4
  - LonWorks Neuron Network Wiring 2-5
  - Dispatcher Communication Wiring 2-5
- Proper Grounding Procedures 2-6
  - Wiring Connections for Properly Grounded Systems 2-6

Encoder Wiring & Mounting 2-7
- Proper Encoder Mounting Procedures 2-7
  - Encoder Mounting for Geared Applications 2-7
  - Encoder Mounting for Gearless Applications 2-8

Tach Generator Mounting 2-8

Environmental Conditions 2-8

Hoistway Equipment 2-9

Tape Installation 2-9

Stick Alignment 2-10

Mounting the Floor Magnets 2-11

Construction Operation 2-12

Section 3. PC Boards

In This Section 3-1

Distributed Processor Control 3-2
- Control Area Network (CAN) 3-2
- Local Operating Network (LON) 3-3

Relay Board 3-4
- Relay Board LEDs 3-4
- Relay Board Faults 3-5
- Relay Board Switches 3-6
- Drive Serial Communication Port 3-7
- Digital to Analog Converter (D/A) Ports 3-7

The MPU 3-8
- Network Channels 3-8
- Speed Curve Generation 3-8

16-Channel I/O Cards 3-9

The Rope Gripper Board 3-11
- Ascending Car Overspeed 3-11
- Unintended Movement 3-11
- Hoistway Door or Car Door Bypass Operation 3-11
- Seismic Reset 3-11
- Rope Gripper Diagnostics 3-12

The Intelligent Car Station Board 3-14
- Car Station Board Inputs 3-15
- Car Station Board Outputs 3-15

Car Top Encoder 3-16
- Digital Speed Reference with Curve Correction 3-18
- Encoder Diagnostics 3-18

IntellaNet Pretorque 3-19

Section 4. Magnetek DSD 412

In This Section 4-1

Controller Power Up 4-2
- Continuity Tests 4-2
- Parameter Access 4-6

Drive Programming 4-7
- Self Tune 4-9

Brake Adjustment 4-11

Run the Car 4-13

High Speed Adjustment - Magnetek DSD 412 4-15
- MPU Initial Set Up 4-15
- Hoistway Learn 4-16
- Preliminary Adjustments 4-17
- Floor Runs 4-18

One Floor Run Up & Down 4-18
Two Floor Run Up & Down. 4-18
Multi-Floor Run Up & Down 4-18
Contract Speed 4-19

Ride Quality and Performance Adjustments 4-20
Drive Tracking 4-20

Drive Reference Information 4-22
Drive Faults 4-22
Drive Parameters 4-25
Display Parameters 4-29

Section 5. Magnetek HPV 900

In This Section 5-1

Controller Power Up 5-2

Drive Programming 5-6
Drive Parameters 5-6

Brake Adjustment 5-8

Run the Car 5-10

Drive Faults 5-11

High Speed Adjustment - Magnetek HPV 900 5-11
Hoistway Set Up 5-11

MPU Initial Set Up 5-12

Hoistway Learn 5-13
Preparation For Learn Trip 5-13
Performing the Learn Trip 5-13

Preliminary Adjustments 5-14

High Speed Adjustment 5-15
One Floor Up & Down 5-15
Two Floor Up & Down 5-15
Multi-Floor Up & Down 5-15

High Speed Adjustment - Magnetek HPV 900 5-16
HPV 900 Adaptive Tune 5-16
Ride Quality Adjustments 5-18

Drive Reference Information 5-19
Using the Programmer 5-19
Drive Parameters 5-19
Drive Faults 5-26

Section 6. KEB/Torqmax F5 AC Drive

In This Section **6-1**

Controller Power Up **6-2**

Auto Tuning and Encoder Data Loading **6-6**
Torqmax/Keb F5 Drive Introduction 6-6
Digital Operator 6-6
Keypad Operation 6-7
Clear Error 6-7
Drive Operation Overview 6-9
Drive Motor/Encoder Setup Overview 6-9
Check Correct Motor/Control. 6-9
Check Control Mode 6-9
Learn or Enter Motor or Encoder Data 6-10
Auto-tuning AC Induction Motors to the F5 Drive 6-10
Manual Induction Motor Parameter Entry 6-11
The Drive Manual 6-11
Loading Data from PM AC Encoder to the F5 Drive 6-12
Learning Encoder Data for PM AC Drives 6-12
Setting the Drive to Run Mode. 6-12
Auto-tuning PM AC Machines to the F5 Drive 6-13

Drive Programming **6-14**
Pre-Torque 6-15

Brake Adjustment **6-16**

Run the Car **6-18**

Drive Faults **6-19**

High Speed Adjustment - F5 Drive **6-19**
Hoistway Set Up 6-19

MPU Initial Set Up **6-20**

Hoistway Learn **6-21**
Preparation For Learn Trip 6-21
Performing the Learn Trip 6-21

Preliminary Adjustments **6-22**

High Speed Adjustment **6-23**
One Floor Up & Down 6-23
Two Floor Up & Down 6-23
Multi-Floor Up & Down 6-23

High Speed Adjustment - F5 . . . . . **6-24**
Ride Quality Adjustments 6-24

Drive Reference Information **6-25**

Drive Faults **6-29**

Section 7. Amicon Regulator

In This Section 7-1

Controller Power Up 7-2

Motor Generator Start Up 7-7

Initial Hoist Motor Field Adjustment 7-8

Amicon Regulator Start Up 7-10

Brake Adjustment 7-12

Run the Car 7-14

Adjustment Preparation 7-15
- MPU Initial Set Up 7-15

Hoistway Learn 7-16
- Preparation For Learn Trip 7-16
- Performing the Learn Trip 7-16

Preliminary Adjustments 7-17

High Speed Adjustment 7-18
- One Floor Run Up & Down 7-18
- Two Floor Run Up & Down 7-18
- Multi-Floor Run Up & Down 7-18

Regulator Adjustment 7-19

Ride Quality Adjustments 7-22

Amicon Regulator Reference Information 7-23
- Status and Fault Indicators 7-23
- Potentiometer Functions 7-24
- Regulator Test Points 7-25

Section 8. Terminal Slowdowns & ETSL System

General Information 8-1

Terminal Slowdown Switches 8-2

Terminal Slowdown Calibration Procedure 8-6

Terminal Slowdown Troubleshooting 8-9
- Learn Procedure Errors 8-9
- Terminal Slowdown Errors 8-10

ETSL System 8-11
- ETSL Wiring 8-11
  - ETSL Bracket Mounting & Set Up 8-12
- ETSL Testing 8-13

Section 9. Load Weigher and Pretorque

In This Section **9-1**

Load Weighing Systems **9-1**

K-Tech Auto Re-Calibration 9-2

Sequence 9-2

Frequency 9-2

Cancellation of the Sequence 9-3

Setup 9-3

Installation **9-4**

Controller Pretorque Setup **9-4**

Section 10. Diagnostics and Parameter Entry

In This Section **10-1**

Diagnostic Screen **10-2**

Controller Inputs 10-4

Standard Inputs 10-4

Optional Inputs 10-8

Controller Outputs 10-12

Standard Outputs. 10-12

Optional Outputs 10-14

Using the Keypad & Accessing Screens **10-17**

Entering Car Calls 10-17

Controller Fault and Event Listing 10-18

Controller Event Log 10-18

Relay Board Events 10-19

Scope Screen 10-20

Accessing Parameter Screens **10-21**

Saving Parameter Values 10-21

Motion Parameters 10-22

Speed Curves 10-23

Brake and Hoistway Devices Parameters 10-27

Car Operating Devices Parameters 10-30

Door Parameters 10-33

Fire and Emergency Power Parameters 10-36

VIP, Medical, Earthquake Parameters 10-40

Miscellaneous Parameters 10-43

Simplex / Inconspicuous Riser Parameters 10-46

Floor Names, PI Outputs, CE Voice Unit 10-49

Floor Names Menu 10-49

Binary PI Outputs 10-50

CE Voice Unit 10-51

Event Disable Parameters 10-53

Car Call Lock Entry 10-54

Hall Call Lock Entry (Simplex / IR only) 10-55

Up Hall Lock Entry (Simplex / IR only) Menu. 10-55

Down Hall Lock Entry (Simplex / IR only) Menu 10-55

Security 10-56

Floor Landing Value 10-57
Pretorque, Learn Trip 10-58
Pre-Torque Set Up 10-58
Learn Trip Menu 10-59
Terminal Slowdowns 10-60
Modem Parameters Menu 10-61
Password/Job Config/Time/Clear Events 10-62

Controller Event Descriptions 10-63
Fault Inputs 10-63

Section 11. Sequence of Operation

In This Section 11-1

Inspection Sequence of Operation 11-2

High Speed Sequence of Operations 11-5

Section 12. Dispatching

In This Section 12-1

Dispatching Screen 12-2
Car-Dispatcher Communication / Hall Button Failure 12-3

Dispatcher Inputs 12-4

Dispatcher Outputs 12-8
Accessing Dispatcher Parameter Screens 12-12

Parameter Menu 1 12-13

Parameter Menu 2 12-15

Parameter Menu 3 12-18

Parameter Menu 4 12-20

Parameter Menu 5 12-22

Parameter Menu 6 12-23
Stand Alone Emergency Power Screen 12-23
Split Feeder Emergency Power Screen 12-26

Lock Screen 12-28

Security Access Code Screen 12-29

Change/Disable Password 12-30

Multiple Dispatchers Linked for Emergency Power 12-31
Description of Phase I Operation 12-31
Description of Phase II Operation for the Master Dispatcher 12-31
Description of Phase II Operation for Subsequent Dispatchers 12-32

Emergency Power: Split Feeder/Multi Bank 12-32
Partial Power Failure 12-32
Multiple Banks 12-32
Multiple Cars 12-32
Emergency Power Bus Selection 12-33

Section 13. Testing

In This Section 13-1
Terminal Limit Test - NTS Top 13-2
Terminal Limit Test - NTS Bottom 13-3
Terminal Limit Test - ETS Top 13-4
Terminal Limit Test - ETS Bottom 13-5
Car Buffer Test 13-6
Counterweight Buffer Test 13-7
Car Governor Overspeed Test 13-8
Counterweight Governor Overspeed Test (If Applicable) 13-9
Unintended Movement Test 13-10
Ascending Car Overspeed Test 13-11

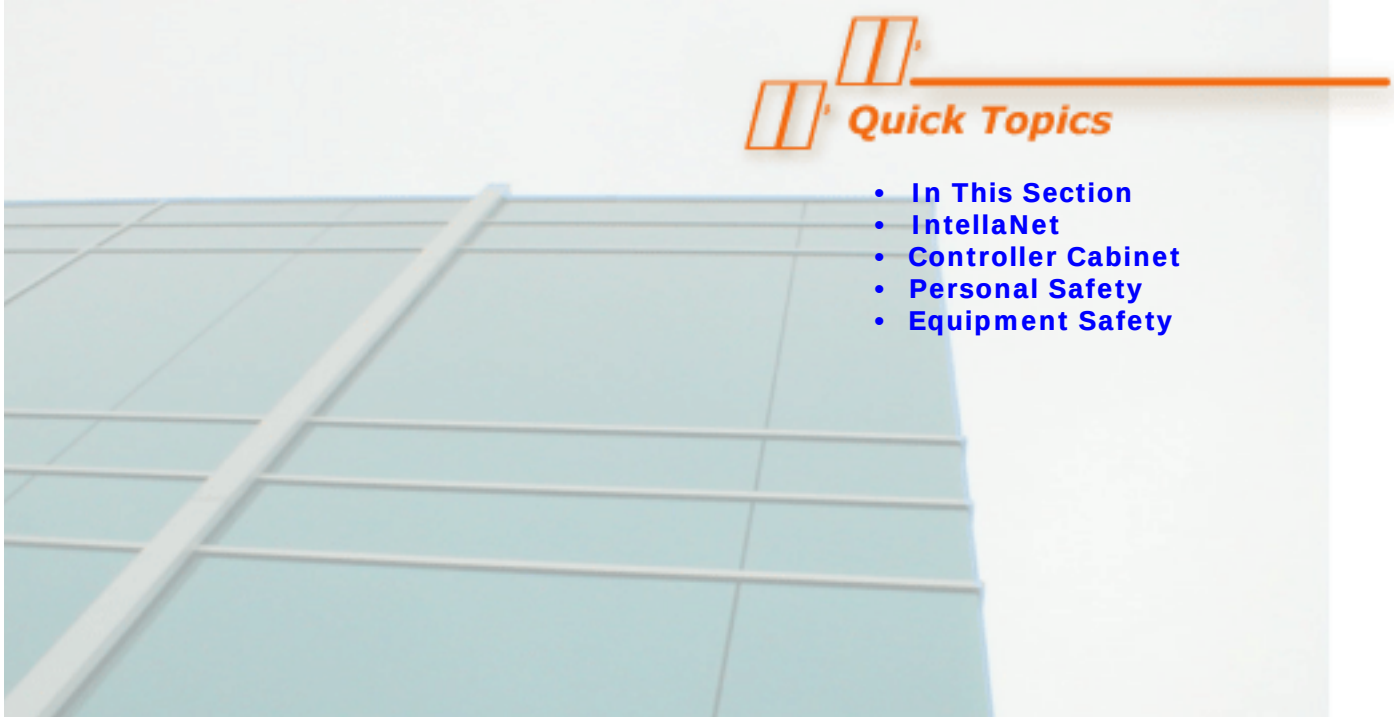

IntellaNet General Information

1

In This Section

This section provides introductory information and safety precautions:

- Controller description
- Car Station description
- Cartop Station description
- Dispatcher description
- Personal safety
- Equipment safety

IntellaNet by MCE

The job prints accompanying the controller are the primary installation guide. The job prints and this manual together provide the information necessary to install, adjust, and troubleshoot the controller. Study the job prints and read the manual before trying to work with the controller. Call Motion Control Engineering with any questions you may have about installation or start-up.

Your IntellaNet system may include:

- Car controller: Distributed-processor, elevator control configured according to customer job survey information.
- Car Station: Intelligent board set provides local control of car inputs and outputs. Usually located in the car operating panel.
- Cartop Station: Cartop mounted enclosure for position encoding/landing system and load weigher interface components.
- Dispatcher: If the car is part of a group, dispatching components and software may be provided. Normally, dispatcher components are contained in a separate cabinet.

IntellaNet provides:

- Mid- to High-Rise building application
- Performance up to 700 fpm (3.5 mps) AC or 1600 fpm (8.0 mps) DC
- Up to 64 single or double-openings
- Up to 9 cars in a control group
- Extensive field programmability
- ASME A17.1/CSA B44 compliant

Car Controller

The IntellaNet system is compatible with industry-available drives including:

- Magnetek HPV 900 AC vector drive
- Magnetek DSD 412 DC drive
- MCE Torqmax/KEB F5 AC drive
- Amicon Regulator

Figure 1.1 Typical IntellaNet Controller (AC drive shown)

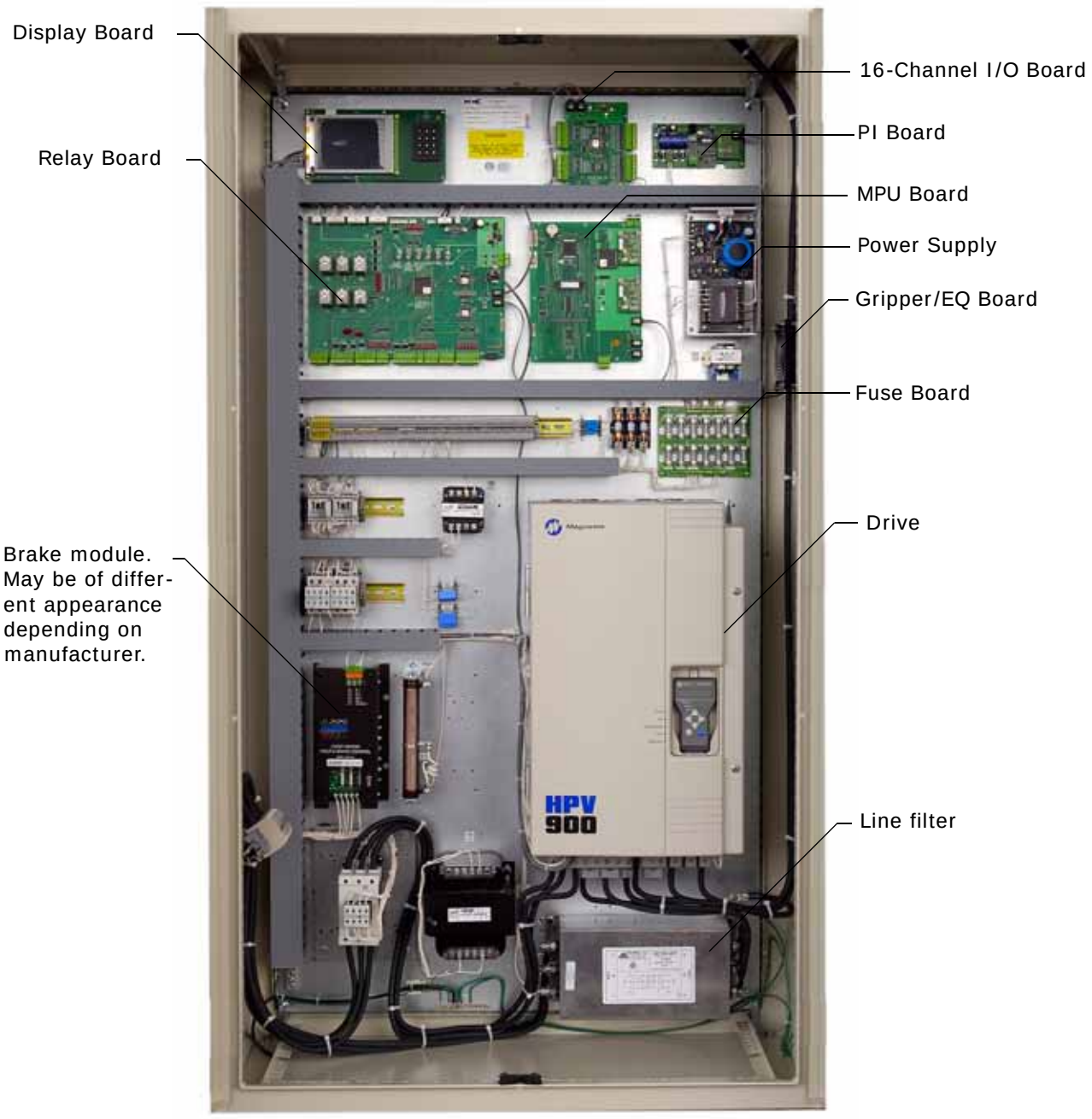

1

Car Station

The IntellaNet car station board serializes car button inputs and outputs, reducing wiring between the car station and the car top. Car station components are usually mounted inside the car operating panel. If room in the car operating panel is not adequate, car station components may be mounted in another location. If required for additional inputs and/or outputs, Expansion boards may be added to the car station complement. A typical car station installation is shown to the right.

Cartop Station

The standard cartop station provides both an interface between the controller and cartop equipment like position encoders and load weighing systems and connections to allow running the car on Inspection mode from the cartop.

Dispatcher

The compact IntellaNet dispatcher allows economical, centralized control of elevator groups of up to nine cars. The dispatcher coordinates group cars to provide the most efficient handling of building traffic. The dispatcher also controls car parking assignment, special operating modes (i.e., lobby peak), and group response during atypical operation (i.e., operation during fire conditions, emergency power conditions, etc.).

Personal Safety

Certain fundamental warnings must be kept in mind at all times. If not, personal injury and/or death may occur. These Warnings include, but are not limited to:

- IntellaNet Controllers should only be installed by qualified, licensed, trained elevator personnel familiar with the operation of microprocessor-based elevator controls.
- Verify that all safety devices (limits, governors, hoistway locks, car gate, etc.) are fully functional before attempting to run the elevator. Never operate IntellaNet controls with any safety device inoperative.
- The user is responsible for complying with the current National Electrical Code with respect to the overall installation of equipment and for proper sizing of electrical conductors connected to the controls.
- The user is responsible for understanding and applying all current local, state, provincial, and federal codes that govern practices such as controller placement, applicability, wiring protection, disconnections, over current protection, and grounding procedures.
- Controller equipment is at line voltage when AC power is connected. Never operate IntellaNet controls with covers removed from drive or brake controls.
- After AC power has been removed, internal capacitors can remain charged for up to 5 minutes. Wait at least 5 minutes after power down before touching any internal control components.
- To prevent the risk of shock, all equipment should be securely grounded to earth ground with a minimum of #8 AWG wire as outlined in the National Electrical Code. Failure to obtain an actual earth ground may result in electrical shock to personnel.
- When using test equipment (oscilloscopes, etc.) with a power cord that electrically ties probe common to earth ground, an isolation transformer should be used to isolate the instrument common from earth ground.
- Remain clear of all moving equipment while working on the controls.

Equipment Safety

Certain fundamental precautions must be taken when working on the IntellaNet system. If not, equipment damage and/or personal injury could occur. These precautions include, but are not limited to:

- All equipment chassis should be securely grounded to earth ground with a minimum of #8 AWG wire as outlined in the National Electrical Code. Failure to obtain an actual earth ground may result in electrical shock. Improper grounding is the most common cause of electrical component failure and electrical noise-induced problems.
- All component replacement must be done with main line power off. Internal capacitors remain charged for up to five minutes after power down. Therefore, component replacement should not take place until after this five minute waiting period. Damage to equipment or unexpected operation of the elevator may occur if this precaution is not observed.
- Substitution of parts or unauthorized modifications to circuits or components should not be attempted before first contacting Motion Control Engineering to ensure all safety features are maintained. MCE will not be held responsible for circuit modifications made in the field unless they are approved in writing by MCE.
- Circuit boards that are determined to be defective should be sent to MCE for repair and subsequent testing. Field repairs may leave the board with undetected problems that may affect other parts of the control.
- Be careful when using test leads or jumpers to avoid applying high voltage or ground to low voltage microprocessor circuits.

Installation

2

In This Section

This section provides general installation and wiring information. The job drawings provide specific connection information. Connections will vary from job to job depending upon the type of installation, installed options, and code compliance issues.

Danger

Elevator control products must be installed by experienced field personnel. This manual does not address code requirements. The field personnel must know all the rules and regulations pertaining to the safe installation and running of elevators.

Installation Considerations

Minimize control equipment exposure to:

- Dust, carbon, and metal particles.
- Vibration and shock.
- Rapid temperature change, high humidity, or high ambient temperatures.
- Caustic fumes.
- Electromagnetic interference.

Electromagnetic interference may be caused by radio transmitters, high voltage inductive spikes from unsuppressed relay coils, improper grounding, and improper wiring practices. Note the following:

- The outer door protects against interference only when closed. Do not operate high wattage radios near the equipment when the door is open.
- Door operator components may cause electrical noise and improper operation if mounted in the controller. If you are not sure if equipment should be mounted in the controller, contact technical support.

If the Display Card LCD shows lines, spikes, or other distortions, check for electromagnetic interference (noise).

Note

AC drives often cause noise interference which may be visible on the display screen when the car is moving. This is normal and will not affect controller operation.

- Check for proper grounding.
- Check that high voltage wiring is not running near the MPU board or Display Card.
- If the noise is seen when the door motor is operating (CXP or OXP are highlighted on the screen), add suppression around door operator circuitry.
- Try to pinpoint when the noise occurs. (For example, when the noise occurs, what relay is picking or dropping?) Once the problem relay is pinpointed, add noise suppression around the coil.

Note

MCE installs arc suppressors (resistor/capacitor networks) around AC relay coils and diodes around DC relay coils to suppress electrical spikes as the coil field collapses. Any devices added to the controller must have some form of suppression installed. Contact MCE engineering for proper component sizing.

Piping and Wiring

Proper routing of signal and power wiring is essential to trouble-free operation. Failure to follow correct procedures will result in erratic operation and/or intermittent trouble. Taking a few extra minutes during installation to do the job properly will save time and trouble later.

How Electrical Noise Occurs

Electrical noise occurs when two wires, one a high power conductor and the other a low voltage signal conductor, run along side one another. As current flows through the high power wire, magnetic lines of flux induce voltage into the low voltage signal conductor. The low level conductor may be a 24-volt input that needs only about 12 volts to activate. If enough voltage is induced, the input can be falsely enabled.

How to Avoid Electrical Noise Problems

The most reliable way to avoid noise problems is by proper routing of high and low voltage wiring. Keep low voltage wiring in separate conduit from high power wiring. If high and low power wiring must be run in the same conduit or duct, keep them a minimum of three to four inches apart. If the two must cross one another, they should cross at a ninety-degree angle.

You may also run low voltage and signal or communication wiring in a shielded cable. The shield or “drain”, as it is sometimes referred to, is connected to ground at one end. With the induced voltage connected directly to ground, electrical noise is suppressed immediately. The shield should never be connected to ground at both ends.

Possible EMI / RFI Interference

Semiconductor devices (like variable frequency drives) switching at high frequency produce EMI/RFI interference. Proper power cable piping and grounding can reduce this:

- Run all motor leads in a separate conduit from the motor or choke to the controller cabinet. Motor lead runs should be as short as possible and their entry into the control cabinet should be as close to the final termination point as possible.
- On control systems with SCR drives, run the main line supply leads in a separate conduit from the main line disconnect to the isolation transformer. From the isolation transformer, run the leads to the controller in a conduit separate from all other wiring.
- On control systems with AC drives or MG sets, run the main line supply leads in a separate conduit from the main line disconnect to the control cabinet.
- A single point ground should be established inside the control cabinet and a #8 AWG ground wire should be run directly from each of the following to this single point:
  - Earth ground from a running water supply, hydroelectric supplied ground, or a ground supplied via a grounding rod to the controller ground stud.
  - Continuous wire from the main line disconnect to the controller ground stud.
  - Continuous wire from the motor frame to the controller ground stud.
  - Continuous wire from the MG set frame to the controller ground stud.
  - Continuous wire from the isolation transformer frame to the controller ground stud.
  - Continuous wire from the DC choke frame to the controller ground stud.
  - Continuous wire from the line filter frame to the controller ground stud.
  - Continuous wire from the load reactor frame to the controller ground stud.
  - Continuous wire from the drive frame ground stud to the controller ground stud.

Tach Generator Wiring

A clean tach signal is critical. The signal must be as clean as possible or extreme instabilities may occur in the motor drive system. Instabilities caused by a noisy tach signal will cause erratic operation.

The tach signal should be wired using a twisted, shielded cable with the shield terminated to the ground terminal at the controller end. DO NOT ground the shield on both ends. If the shield is grounded at both ends, an “antenna” is created and noise can be induced into the tach signal.

Low Voltage Signal Wiring

24-volt inputs (car calls, door limits, electric eyes, etc.) need to see only about 12 volts to turn on. If signal wires are run along side power wiring, it is very likely that noise will occur. Keep low voltage wiring at least 4 inches away from high power wiring to avoid false signal firing. If low level wiring must cross high power wiring, the two must cross at a ninety-degree angle.

High Power Wiring

High power wiring that should be piped separately from signal wiring:

- Main line connections.
- Motor wiring.
- Brake coil wiring.
- Generator shunt field wiring.
- Generator armature wiring.

In most cases, it is preferable to run the motor wiring and brake wiring in one pipe. All other wiring should all be run in separate pipes, NOT in a common duct with signal wiring.

Traveling Cable Wiring

IntellaNet design eliminates most low voltage wiring from the traveling cable. If it is necessary to run some low voltage wiring in the traveling cable, take care that it is multiple layers away from 14 AWG power wires.

Car Top Encoder Wiring

The car top encoder communicates with the system MPU board through a neuron network at extremely high frequency. Devices at both ends of the network check for errors in the message every time information is sent. However, to eliminate any possible issues with noise from door operators or other inductive devices, we recommend the communication cable be a twisted, shielded pair wire. This may not be provided in all traveling cables. Connect the shield to ground only at the controller end.

LonWorks Neuron Network Wiring

The neuron network is noise resistant. However, the cable connecting the Lon devices should have the shield grounded at the source end. To ensure that there will be no problem with interference on the Lon network, please adhere to the following:

- MPU board to Encoder board: Ground the shield at the controller and tape off the shield wire at the encoder.
- Encoder board to Car Station board: Ground the shield at the Encoder board and tape off the shield at the Car Station board.
- Dispatcher Link (Network B connections from the dispatcher to the first car and from car to car): Install the wire from the dispatch MPU board to the MPU board of the first car in the group. Ground the shield at the dispatcher end. The shield at the car end should not be connected. The next car in the group should have the shield grounded at the first car, and left off at the next car. Subsequent cars will be connected in a similar manner. Refer to the wiring diagrams for proper connections.

Dispatcher Communication Wiring

Communication cables between the car and dispatcher should be run in a separate conduit from any power wiring. There are some required interconnections for redundant signals between the dispatcher and the cars. These can be run with the communication cable in the same conduit. Refer to the wiring diagrams for the proper connections.

Communication cables between the dispatcher and lobby displays or building management systems should be through shielded pair wiring.

Proper Grounding Procedures

A proper ground is essential to trouble free operation. GROUND is defined as a direct connection to EARTH GROUND. This type of ground is not always available from the electrical supply panel.

The electrical conduit is not a sufficient ground for the system. Electrical ground should be obtained and certified from the electrical contractor. If this is not available, keep the following in mind when seeking an adequate connection to EARTH GROUND:

- Building steel is not always earth ground. In most cases, building beams rest on concrete beam pockets and the earth connection is inadequate.
- A sprinkler system water pipe is not adequate because the sprinkler system is usually isolated from a free flowing earth water source.

If either of the two methods above are chosen for ground, and a true electrical ground is later introduced, a difference in potential can occur between the assumed ground and the actual earth ground. This difference may lead to unstable operation and the possibility of electrical shock to passengers or personnel.

- A water pipe is an adequate ground only if the water in the pipe is connected to a continuous city water source.

Wiring Connections for Properly Grounded Systems

- An uninterrupted ground wire of at least #8 AWG wire should be run from each car controller cabinet chassis or backplate to earth ground. The connection at the car controller must be scraped free of paint so the ground connection is made to the bare metal of the enclosure. The car controller should read less than 1 ohm to ground with power off.
- Ground straps, or short loops of ground wire, should be run from the controller ground connection to the primary duct connections.
- An uninterrupted #8 AWG ground wire should be run from the hoist motor frame to the controller ground. The frame point of connection must be bare metal.
- A continuous, looped ground wire should be run from each hall lantern and position fixture box to controller ground. The ground connection at each fixture should make an electrical connection to the bare metal of the fixture box and its cover.
- An uninterrupted ground wire, minimum #14 AWG, should be run from a termination point on the cab to the controller ground.
- An uninterrupted ground wire should be run from the cab enclosure to the ground terminal on the cab to protect passengers and personnel from electrical shock.
- An uninterrupted ground wire should be run from each car operating panel to the ground terminal on the cab to protect passengers and personnel from electrical shock.
- An uninterrupted ground wire should be run from the dispatch cabinet chassis or backplate to earth ground. The connection at the dispatch cabinet must be scraped free of paint so the ground connection can be made to the bare metal of the enclosure.
- A continuous looped ground wire should be run from each hall call station to the dispatch or controller ground.

Encoder Wiring & Mounting

A quadrature encoder is used on the Magnetek DSD 412 and HPV 900 drives. Three twisted pairs, each with an overall shield are used to wire the encoder.

- A+ and A- are wired in a single twisted pair with an overall shield wire.
- B+ and B- are wired in a single twisted pair with an overall shield wire.
- +5 volts and common are wired in a single pair with an overall shield wire.

1. Connect all shields together and terminate them at the drive.
2. Do not connect the shields at the encoder end.
3. Tape off or insulate shield wires at the encoder end.

If the job uses a KEB drive, any of a few encoders may be used depending on the motor type. Follow the encoder instructions in the KEB drive manual and wire the encoder according to the job prints provided by MCE.

Proper Encoder Mounting Procedures

Poor encoder mounting causes an unstable speed feedback signal to the drive. Unstable feedback is amplified within the regulator circuits and leads to ride oscillation and vibration.

A common misunderstanding is that the speed feedback signal should exactly reflect the actions of the **car.** This is incorrect. Mechanical resonance and instabilities can exist in a system that should not be incorporated into the motor control. An example of mechanical instability is improper gear lash in a geared application.

The speed feedback signal should exactly reflect the action or speed of the **motor**. The encoder signal is viewed in terms of resolution. An encoder with the proper PPR, or pulses per revolution, should be selected. As a rule of thumb, if the encoder is mounted to the motor shaft in a gearless installation, it should produce about 10,000 PPR. If it is equipped with a wheel and mounted to a drive sheave, it should be either 2,500 or 5,000 PPR, depending on motor RPM. An encoder driven off the motor or worm shaft should be 2,500 PPR.

Encoder Mounting for Geared Applications

We recommend the encoder for geared applications be coupled directly to the motor or worm shaft using an isolated flexible coupling supplied by the encoder manufacturer. The encoder shaft should not be hard-coupled to the motor shaft due to imperfections in motor shaft alignment. If the encoder shaft is hard-coupled to the motor shaft without a flexible coupling, premature encoder failure will occur.

We do not recommend driving the encoder from the drive sheave on geared applications. This is primarily due to mechanical inconsistencies in the gearbox. These will be introduced into the motor control circuits and the electrical stability of the system will be compromised.

Encoder Mounting for Gearless Applications

We recommend that the encoder for gearless applications be driven from the motor shaft to provide the best speed feedback signal and reduce the possibility of vibration in the car.

Alternatively, you may choose to mount the encoder on the drive sheave using a standard tach wheel. The tach wheel should ride on a smooth, machined surface to the side of the rope grooves or directly on the brake pulley. The surface should be free of paint and excessive grooving. The mount must allow the encoder to closely follow any surface imperfections.

Note

If the encoder vibrates or bounces on the driving surface, it will typically show up as vibration during acceleration and deceleration. If this occurs, the spring on the mounting bracket should be tightened to hold the encoder to the driving surface. However, be certain that no more than 7 ft/lbs of pressure are applied on the encoder shaft.

Tach Generator Mounting

The tach generator is used on jobs with MG sets. It provides speed and direction feedback to the generator shunt field regulator.

We recommend that the tach be mounted to the motor or worm shaft on geared applications and to the brake or drive sheave on gearless applications.

Environmental Conditions

We recommend that the controller be installed in an environment of 0 - 40° C (32 - 104°F) ambient temperature with relative humidity below 95% (with no condensation).

Hoistway Equipment

This section describes installing the position/speed/direction detection system used with the IntellaNet controller.

Tape Installation

IntellaNet uses a perforated steel tape in the hoistway. The tape and car top encoder provide position, speed, and direction feedback to the control system.

Before installing perforated tape, ensure adequate clearance from beams, walls, counterweights, cabs, and terminal limit devices. Make sure the sensor stick is not placed so close to the governor lift arm that, when the car safeties are activated, the stick assembly is damaged or the car safeties cannot apply.

- Hang the tape high enough in the hoistway so that, when the counterweight is on a fully compressed buffer, the stick can continue to ride up high enough that it will not be damaged by overhead obstructions. A bracket is provided to attach the tape to the rails.
- Attach the tape in the pit low enough so that, when the car is on fully compressed buffer, the stick and any car devices do not come in contact with the tape hold down assembly.
- Adjust tape spring tension for adequate tension of the tape in the hoistway so the tape does not make noise as the car travels up.
- During installation, the edges of the tape sometimes become gouged. After the tape is installed, use a fine file on the edges of the tape to remove any burrs or gouges. This will lead to much quieter operation of the encoder system as the car travels at contract speed.
- After smoothing the edges, wipe off all excess oil and dirt from the face of the tape before installing magnets. Do not use rags that will leave lint on the tape.
- Apply a light film of silicone lubricant to the stick guides every 6 months to prolong guide life.

Stick Alignment

After the tape has been installed, adjust the stick front to back slightly so it does not ride hard on one side of the uni-strut bracket during any part of travel through the hoistway. In high-rise buildings, the rails may vary in and out substantially. This may cause the encoder guides to wear prematurely unless they are regularly lubricated.

Figure 2.1 Tape Installation

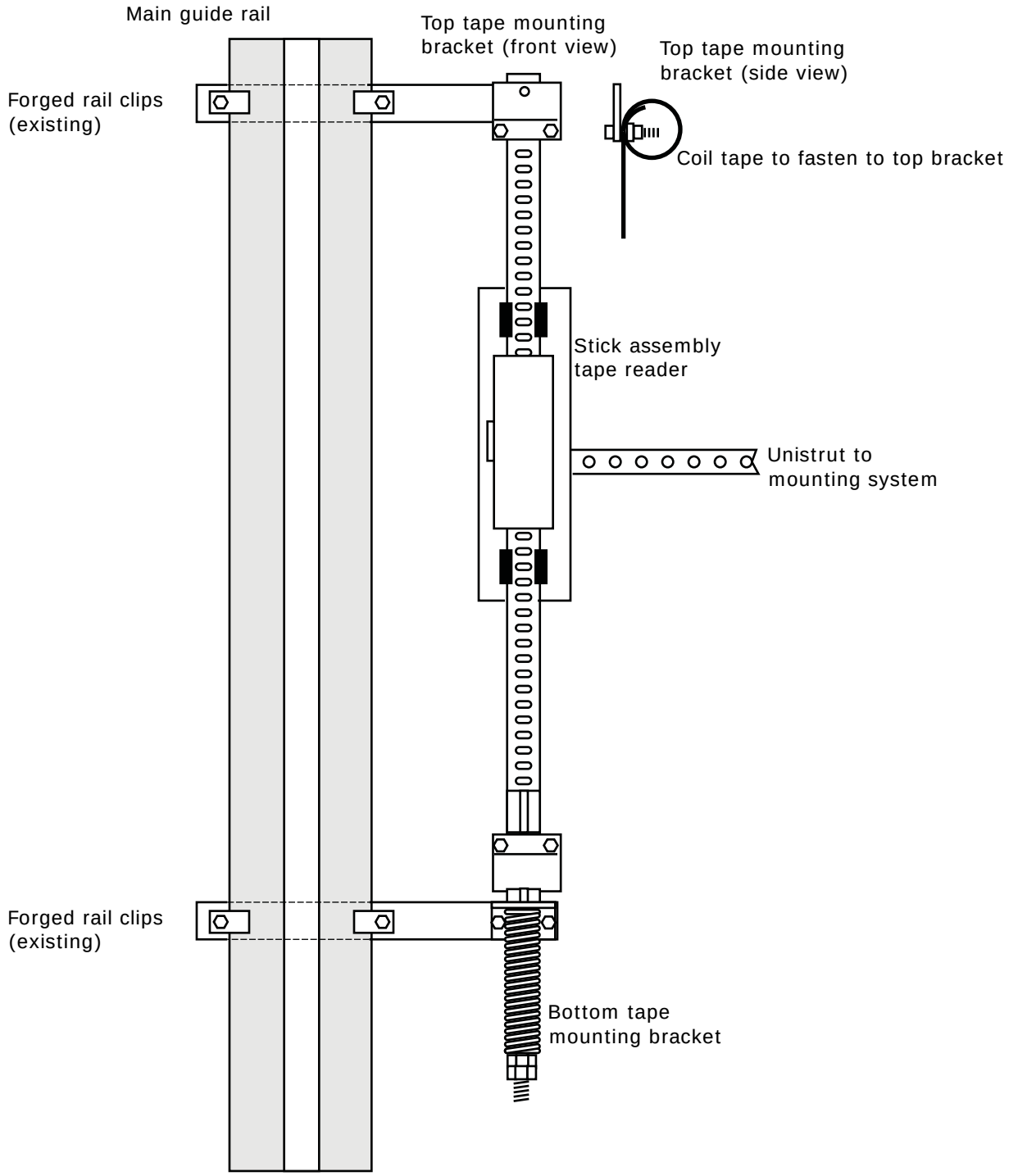

Mounting the Floor Magnets

South facing magnets of different lengths are used to encode each floor position. Magnet length starts at 6 1/2 inches at the bottom floor and increases by 1/2 inch for each successive floor. Looking at the perforated tape from the elevator car, the magnets for the door zone are mounted to the right of the perforated holes. The magnets should be mounted as close to the perforated holes as possible without covering any portion of the hole.

The 6 1/2-inch magnet should be mounted on the lowest floor. Each successively larger magnet should be mounted on the next highest floor. For example:

- Bottom floor served: 6 1/2 inches
- Next floor up: 7 inches
- Next floor up: 7 1/2 inches
- Etc.

To mount the magnets:

1. Move the elevator level with the lowest floor on inspection.
2. Make a mark on the tape even with the top of the encoder assembly back plate.
3. Place the top of the magnet 9 inches below the scribe mark and to the right of the perforated holes. The inner edge of the magnet should line up as closely as possible to the holes in the tape without actually covering any part of the holes.
4. Continue for successive floors using incrementally longer magnets.

Note

The magnets must be installed so that they face the front cover on the encoder stick assembly. If the magnets are installed so they face the backplate of the stick assembly, they will not fire the door zone sensors on the stick and may be damaged by the encoder backplate if the car is moved.

If the floor position magnet is designated as an express zone magnet, it should be mounted in the same vertical position, but on the left side of the tape so the door zone sensors will not sense a door zone at that floor.

Express Zone Magnets indicate a position output, but not a floor stop. For example, this would be used to indicate an “X” for a blind hatch. Place magnets for express zones toward the middle of the zone.

Construction Operation

If you will be running the car on construction operation before all equipment is installed and all running adjustments are made then, in addition to safety related equipment, you will need to temporarily install jumpers between AC2 and terminal switch inputs U4 and D4 respectively if you wish to run the car on inspection at speeds exceeding 20 feet per minute.

Please refer to “General Information” on page 8-1 and other section information for more information about terminal switch installation and configuration.

Danger

All temporary jumpers must be removed, all required equipment installed, and all adjustments made before attempting to run the car on normal operation.

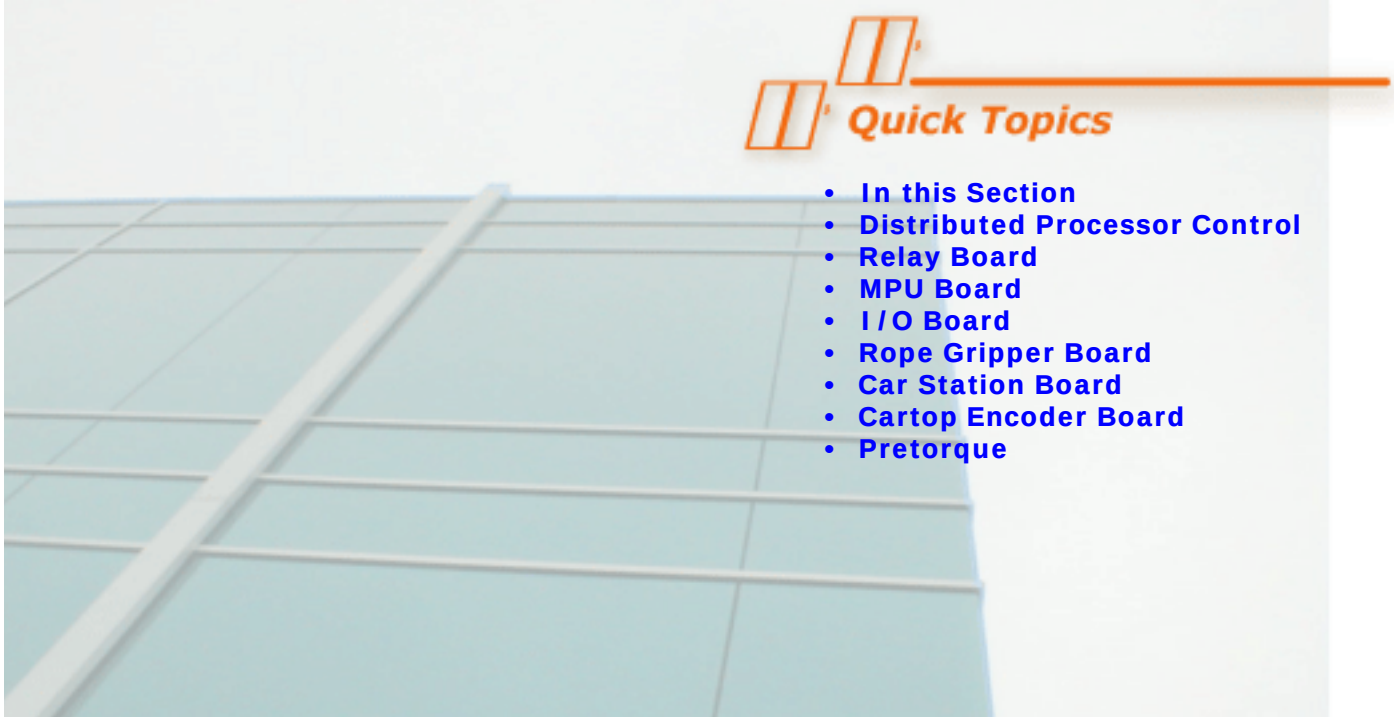

PC Boards

In This Section

This section describes IntellaNet circuit boards and communication networks:

- Control Area Network
- LON Network
- Relay Board
- MPU Board
- I/O Board
- Rope Gripper Board
- Car Station Board
- Cartop Encoder Board
- Pretorque

Danger

Elevator control products must be installed by experienced field personnel. This manual does not address code requirements. The field personnel must know all the rules and regulations pertaining to the safe installation and running of elevators.

Distributed Processor Control

The IntellaNet control system is a distributed microprocessor-based system. Distributed processing reduces traveling cable wire count and improves data processing time. The control system uses two communication networks; the Control Area Network (CAN) and the Local Operating Network (LON).

Control Area Network (CAN)

The Control Area Network is confined to the controller cabinet. The controller MPU communicates with other circuit boards in the controller through this network.

CAN network cables look like phone cables but they are NOT. The cables connect each board on the controller network and also distribute power.

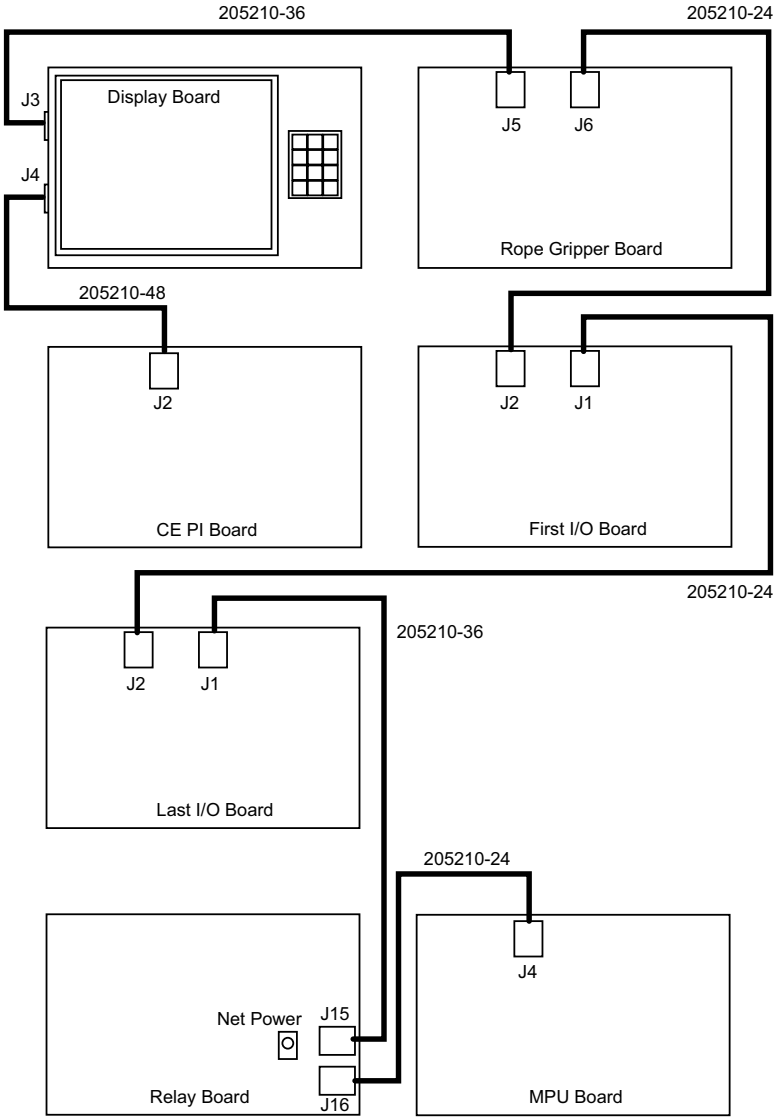

Local Operating Network (LON)

The Local Operating Network is a LonWorks™ neuron network. Processors on the controller MPU board, the car top Encoder board, and the Car Station board communicate over this high speed bus. Encoder and Car Station processors handle inputs and outputs at their locations and report status to the central processor, or MPU, located in the controller.

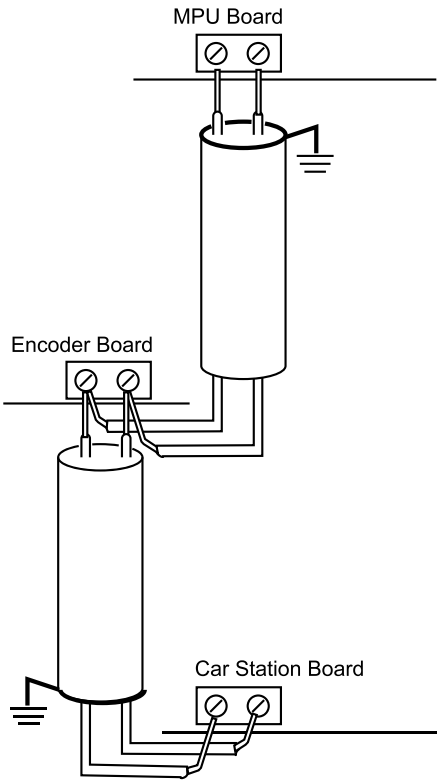

The LON network communicates at very high speed through one twisted, shielded pair of wires. These wires are connected in a “daisy chain” fashion from the MPU, or Main Processing Unit, to the Car Top Encoder Board, and then to the Intelligent Car Station Board. The shields on each cable length must only be connected on one end.

Note

It is important to connect the LON network as shown to prevent errors. The LON network will not communicate correctly if there is a branch in the network.

The Main Processing Unit (MPU) processes information sent by the remote processors and sends them messages to turn on devices connected at the remote locations. The main processor also generates a digital pattern that is sent to the motor drive system to control car acceleration, deceleration, and stopping.

Relay Board

The relay board supports standard elevator relay logic circuitry. Additional relays are added if necessary depending upon the drive or MG set used. The CAN network power supply is also on the relay board.

The relay board has two separate processors. The first controls relay logic. If this processor were to fail, relay board Ready LED D53 would go off and the car would not respond to control. The second processor is used specifically for terminal slowdowns (TSD). If the relay board processor or the MPU fail to slow the car as it approaches the terminal floor, the TSD processor will take over.

The relay board controls inspection operation. IntellaNet does not require the MPU or the CAN network to run the car on inspection. The relay circuit acts independently of the MPU to enable the drive or regulator, generate a speed demand, and safely operate the car on inspection.

Relay Board LEDs

Table 3.1 Relay Board Diagnostic LEDs

LED #	Name	Description
LED55	SAFETY	Safety circuit closed.
LED53	READY	Relay board processor functioning correctly.
LED52	GATE	Gate switch closed.
LED51	LOCKS	Door Locks closed.
LED50	DRIVE OK	Drive or regulator ready.
LED49	ETS OK	TSD processor indicates ETS system OK and no trip has occurred.
LED48	AUTO	Car is on Automatic operation.
LED47	UPN	Up directional limit closed.
LED46	DNN	Down directional limit closed.

Relay Board Faults

The relay board detects a number of faults. Relay board status is displayed on the diagnostic screen. When an event occurs and while it is active, a message appears.

Table 3.2 Relay Board Event List

Event	Cause	Correction
FRX_MON Fault	FRX_MON input is high when the processor is not demanding outputs FRX or FRXA be on.	Outputs FRX and FRXA are only enabled to bypass the stop switch on fire recall phase I. If the FRX_MON input is on, there is a failure of one or both of the outputs. Replace the relay board.
GAC_MON Fault	GAC_MON input is high when the processor is not demanding outputs GAC or GACX be on.	Outputs GAC and GACX are only enabled by the relay board to bypass the gate switch for hoistway access. If the GAC_MON input is on, there is a failure of one or both of the outputs. Replace the relay board.
BAC_MON Fault	BAC_MON input is high when the processor is not demanding outputs BAC or BACX be on.	Outputs BAC and BACX are only enabled by the relay board to bypass the bottom floor door lock for hoistway access. If the BAC_MON input is on, there is a failure of one or more of the outputs. Replace the relay board.
TAC_MON Fault	TAC_MON input is high when the processor is not demanding outputs TAC or TACX be on.	Outputs TAC and TACX are only enabled by the relay board to bypass the top floor door lock for hoistway access. If the TAC_MON input is on, there is a failure of one or more of the outputs. Replace the relay board.
G_MON Fault	The G_MON input is enabled when the car door (gate) switch is turned off and the processor is not demanding the GBYP output be on.	The G_MON input monitors the status of the G relay and the GBYP output. If the status of the G_MON input and the GATE inputs do not agree when the relay board is not demanding the GBYP output to be on, the relay board will declare a G_MON fault. Most likely causes are a bad G relay, bad GBYP output, or a failed GATE input. Replace the G relay and if the problem persists, replace the relay board.
LEV/DL_MON Fault	The LEV/DL_MON input is enabled when the DL relay and the DBYP and LEV outputs are demanded to be off.	The LEV/DL_MON input monitors the status of the DL relay and the LEV and DBYP outputs. If the input is enabled when the processor demands the DL relay and the LEV and DBYP outputs to be off, the most likely cause is a bad DL relay or bad LEV or DBYP output. Replace the DL relay. If the problem persists, replace the relay board.
DZ_MON Fault	The DZ_MON input is enabled when the door zone input is turned off.	The DZ_MON input monitors the status of the DZ relay. If the input is enabled when the Door Zone input is turned off, the most likely cause is a bad DZ relay or bad Door Zone input. Replace the relay. If the problem persists, replace the relay board.
SR_MON Fault	The SR_MON input is enabled when the processor is demanding the APW output be off.	The SR_MON input monitors the status of the SR relay. If the input is enabled when the APW output is turned off, the likely cause is a bad SR relay or jumper on the controller. Replace the SR relay. If the problem persists, check for a jumper or short across contacts 11 and 7 of the SR. If no short is found, replace the relay board.
B_MON Fault	The B_MON input is enabled when the processor is demanding the RBK output be off.	The B_MON input monitors the status of the B relay. If the input is enabled when the RBK output is turned off, the most likely cause is a bad B relay or jumper on the controller. Replace the B relay. If the problem persists, check for a jumper or short across contacts 12 and 8 of the B. If no short is found, replace the relay board.

Table 3.2 Relay Board Event List

Event	Cause	Correction
EN-MON Fault	The EN_MON input is high when the processor is demanding the RE output be off.	The EN_MON input monitors the RE output state. The processor turns on RE after the gate circuit is made up just prior to turning on the APW output. The RE output staggers the relay circuitry so the processor can check the G relay contact prior to allowing DL to close. Check for a jumper or short across the RE output. If no short is found, replace the relay board.
Proving Fault	The PRV and PWA inputs have not gone high before a run has been demanded.	The PRV and PWA inputs monitor the status of the various contactors on the controller. The relay board needs to see both of these inputs turned on before the car can be run. Check the PRV and PWA inputs. If both are turned on, try to run the car on inspection. If the problem persists, replace the relay board.

Relay Board Switches

Relay board switches are arranged so that, when the car is on Normal operation, all switches are in the UP position.

- Door Disable Switch: Activates the DDSH input to the controller. When the switch is in the down or “Disable” position, the car will be placed on door disconnect service. Placing the car on Door Disconnect Service will cause the following, in the stated order:
  - Car will be removed from Group Service.
  - Car will answer all remaining car calls.
  - After all car calls are answered, the car will close its doors.
  - The car will keep the doors closed until the switch is returned to the off position.
  - The door open button will remain active while the car is on Door Disconnect Service in case any passengers entered the car and did not register a car call.
- Emergency Door Open Switch: In an emergency, it may be necessary to open the car doors to remove trapped passengers. In this case, the car can be moved to a floor on inspection operation and this switch then activated to signal the Car Station board to open the doors. The microprocessor will only open the doors if the car is on inspection and in a door zone.
- Drive Reset / Non-Reset Switch: Prevents the drive from being reset by the control system if a fault occurs. This allows the fault to remain latched on the drive for troubleshooting purposes. When in the down position (NON-RESET), the drive will not be reset if a fault occurs.
- MG Start / Run Switch: Used on generator applications to shut down the motor generator set when desired.
- Normal / Inspection Switch: Places the car on inspection. Placing this switch in the up position places the car on automatic service. Placing it in the down position places the car on inspection.
- Inspection UP/DN Switch: With the Inspection Enable button pressed, allows the car to be moved at inspection speed from the controller. This switch is overridden by in-car and top-of-car inspection modes.
- Inspection Enable switch: When pressed and held, enables the inspection UP/DN switch on the relay board
- Net Power: Used to enable/disable 18-volt CAN network power.

Drive Serial Communication Port

The control system uses a serial interface to the drive through relay board RS422 port J17. Different cables are used for AC and DC drives. The cables have a non-standard pin-out so standard DB-9 cables **cannot** be substituted.

On automatic operation, the relay board receives the speed command from the MPU board, sends it through the TSD (Terminal Slow Down) or Limit processor to ensure that the car slows as it approaches the terminal floors, then on to the drive through the serial communication port.

On inspection operation, the relay board provides the speed command to the drive. The MPU does not control inspection operation. The MPU is not needed to operate the car on inspection.

Digital to Analog Converter (D/A) Ports

The relay board has two D/A (Digital to Analog Converter) ports. The first, connector J1, is used to output an analog pattern to the motor drive system for MG applications. The second, connector J2, is reserved for future use. D/A ports are internally adjusted. No tuning is necessary. D/A ports provide electrical isolation between motor control and controller logic circuitry.

The D/A port outputs a voltage proportional to the desired car speed. As with the serial communication to the drive, the speed reference voltage is generated by the MPU when on automatic operation and passed through the TSD processor to ensure the car slows at the terminal floors.

Figure 3.1 IntellaNet Relay Board

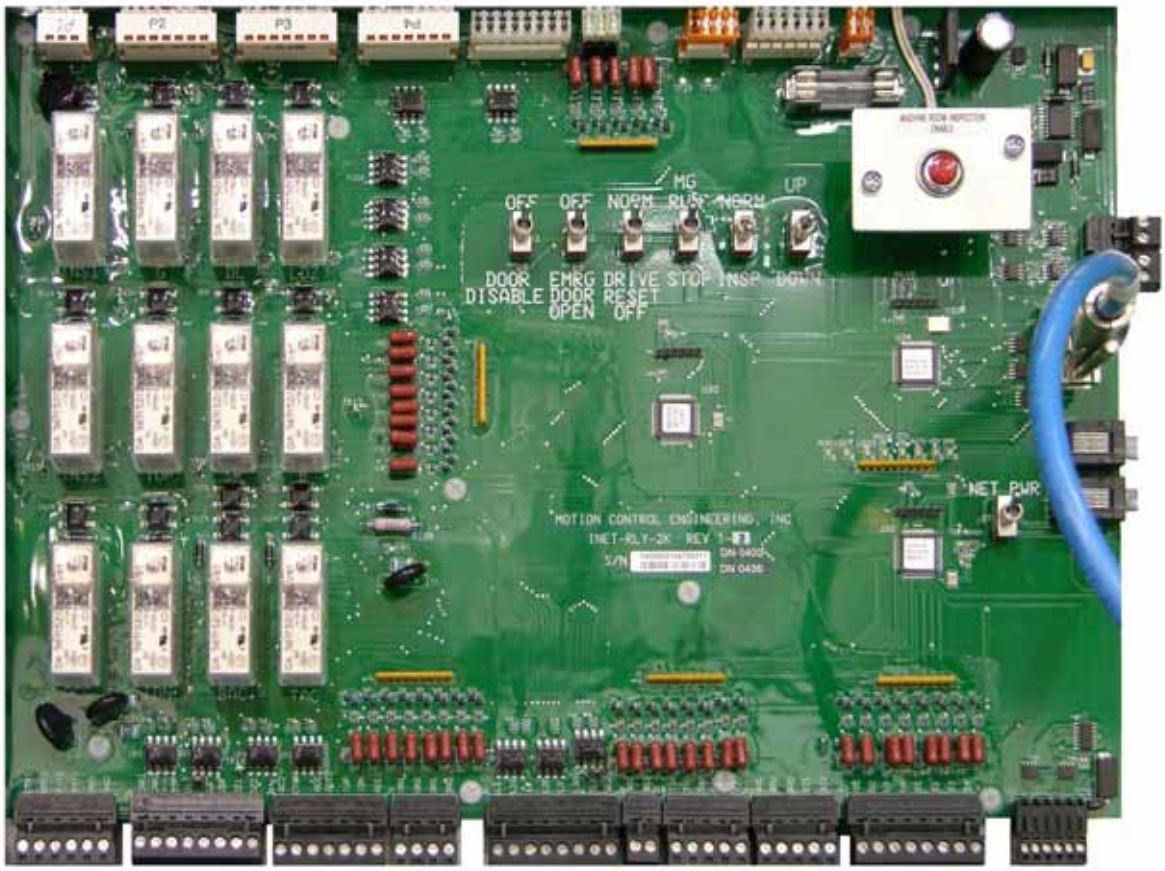

The MPU

The controller MPU (Main Processing Unit) is the primary processor for automatic operation. The MPU receives speed, direction of travel, and position updates from the Car Top Encoder and car signal status from the Intelligent Car Station board. Based on these inputs, the MPU directs the control system to operate the doors, initiate motion, create the speed profile, and safely move the car to the desired location. It is important to note that, while the MPU is responsible for Automatic operation, the relay board is responsible for inspection operation.

Network Channels

The MPU board has two LON network channels. A plug-in LON board may be installed in one or both network channels as needed.

The first LON channel is used for the car network. The Intelligent Car Station board and The Car Top Encoder communicate with the MPU through this channel. This network has the highest level of priority. The second network channel can be used for the dispatching network or optional equipment. If it is used for the dispatcher, this network ties all of the cars to each other and to the dispatcher. Optional equipment that may instead be used on the second LON channel includes boards to provide inconspicuous riser calls, additional dispatching networks (such as swing car operation), or the interface to the CE Voice Annunciator unit.

A chip on the MPU contains the car software program. A label on the chip identifies the job name, car number, software revision level, and the date the software was created. This chip is programmed on a per car basis and cannot be swapped with other jobs or other cars for system operation. If it becomes necessary to change the MPU board, the software chip must be removed from the old board and installed in the new one.

A battery on the MPU board provides power to back up the car event log and time clock for approximately two hours in the event of a power loss. The battery should never need to be replaced.

Speed Curve Generation

The MPU generates the digital speed pattern. It receives information from the remote processors and outputs a speed command to the motor drive system. Speed curve information is transmitted serially to AC or DC drives. For the Generator Shunt Field Regulator used on MG applications, an analog speed command is sent through relay board connector J1. The analog reference is adjusted for 7 volts at contract speed, positive in the up direction and negative in the down direction.

The maximum speed attained on any run is determined by user-entered speed curve parameter settings, floor-to-floor distance, and the motor control system. Final speed (leveling) is a user-entered speed curve parameter setting as well.

During the slowdown portion of each run, the ideal speed reference (calculated using the user entered speed curve parameters) is altered based on actual car position and speed. This “curve correction” provides a consistent ride on all runs.

16-Channel I/O Cards

The control system uses a number of 16-channel I/O boards. I/O boards communicate over the controller CAN network. Each board is addressed using a jumper on the board JP5 header.

- For I/O card 1, no jumper is installed.
- For I/O card 2, a jumper is placed on pins 1 & 2.
- For I/O card 3, a jumper is placed on pins 3 & 4.

Refer to the job wiring diagrams to see which boards are required and where the jumpers are placed on each.

16-Channel I/O cards are configured to accept 24-volt or 110-volt AC or DC inputs.

- If the first set of 8 inputs has been mapped to accept 24-volt signals, a jumper must be placed on JP1.
- If the second set of 8 inputs has been mapped to accept 24-volt signals, a jumper must be placed on JP2.
- If the connector has been mapped for 110-volt signals, no jumper is necessary.

The following illustration provides an example of typical signal wiring for a 16-Channel I/O board.

Figure 3.2 16-Channel I/O Example

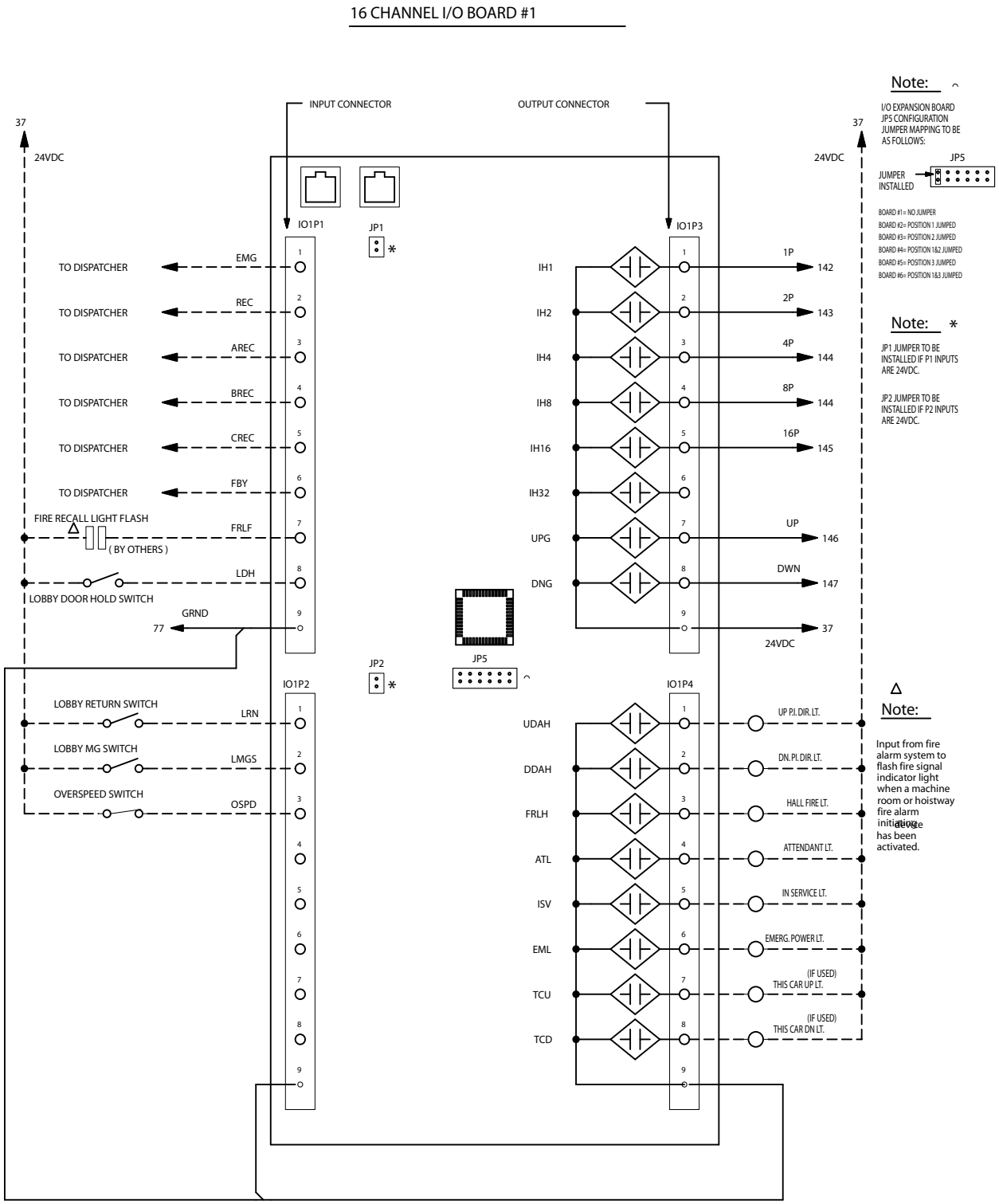

The Rope Gripper Board

The Rope Gripper board triggers a rope gripper to protect against an ascending car overspeed (overspeed in the up direction) or unintended movement away from a landing with hoistway and car doors open. For 2000 code compliance, on every stop in a door zone, if the proving circuit is in the correct state, the rope gripper relays are cycle tested. Failing the cycle test will cause the board to shut down and require a manual reset.

Ascending Car Overspeed

The Rope Gripper board independently monitors car speed and, if it detects an overspeed of 10% or more of contract speed, applies the rope gripper. When this occurs, the Rope Gripper board Overspeed LED will light. The rope gripper must be reset manually. To reset the rope gripper:

- Push the Rope Gripper Reset toggle switch up or down. The LED will go off and the rope gripper will release.

Unintended Movement

The Rope Gripper board independently monitors hoistway and car door status, and door zone presence. If the door zone signal is lost when the hoistway doors and car doors are open, the Rope Gripper board will apply the rope gripper and light the Unintended Movement LED. To reset the rope gripper:

- Push the Rope Gripper Reset toggle switch up or down. The LED will go off and the rope gripper will release.

Both Overspeed and Unintended Movement faults are latched in Rope Gripper board memory. Cycling power to the system will not clear the fault. The only way to reset a trip is by toggling Rope Gripper Reset.

Hoistway Door or Car Door Bypass Operation

The Rope Gripper board has toggle switches for Hoistway Door and Car Door Bypass. These switches put the control system into Hoistway Door Bypass or Car Door Bypass modes. When in either of these modes, the car can only be operated on inspection from the car top or in the car. Automatic operation and controller inspection operation are disabled.

Seismic Reset

The Rope Gripper Seismic Reset switch resets the control system if a seismic event occurs. Toggling the switch up or down will initiate reset.

Figure 3.3 Rope Gripper Board

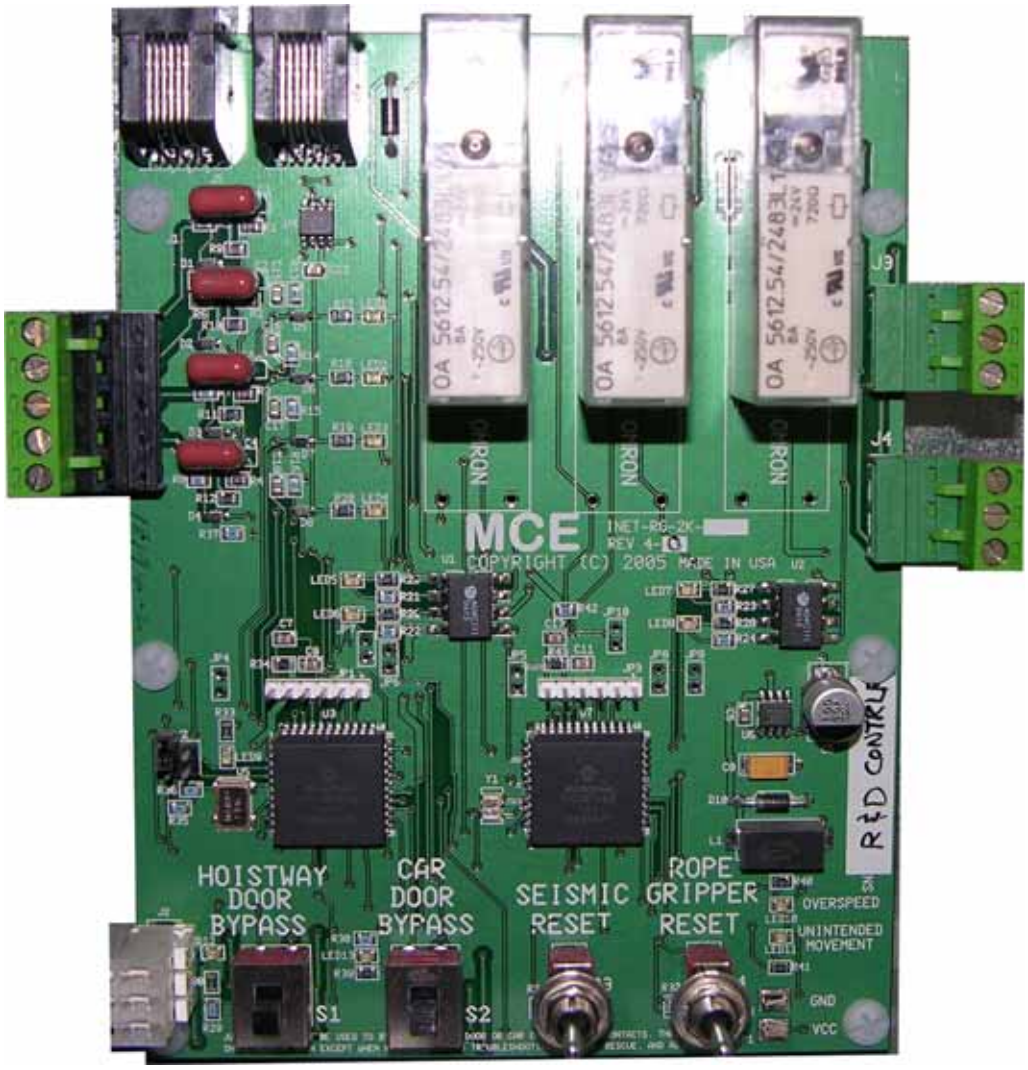

Rope Gripper Diagnostics

LEDs 1 through 11 function as in the table below.

Table 3.3 Rope Gripper LEDs

LED	Description
1	Rope gripper pilot relay input
2	Door zone input
3	Door gate input
4	Car gate input
5 - 8	Rope gripper pilot outputs
9	Diagnostic LED, see LED 9 table following
10	Overspeed trip (If LED 11 is not on)
11	Unintended movement trip (If LED 10 is not on)
10 & 11	Redundancy or relay cycling test failure when on simultaneously

With the board ready and no failure detected, diagnostic LED 9 blinks continuously at a fast rate.

If a failure is detected, LED 9 blinks a specific number of times slowly, pauses for five seconds, and repeats. The number of flashes/blinks corresponds to a particular fault as described in the table below.

Table 3.4 LED 9 Fault Indications

#	Fault	Description
1	Overspeed fault on power up	Board tripped on overspeed and gripper reset switch was not activated prior to cycling power.
2	Unintended movement fault on power up	Board tripped on unintended movement and gripper reset switch was not activated prior to cycling power.
3	Relay cycling test fault on power up	Five consecutive gripper relay cycling failures and gripper reset switch was not activated prior to cycling power.
4	DZ redundancy fault	DZ contact input low, CAN DZ input high.
5	DG redundancy fault	DG contact input low, CAN DG input high.
6	CG redundancy fault	CG contact input low, CAN CG input high.
7	DZ redundancy fault	DZ contact input high, CAN DZ input low.
8	DG redundancy fault	DG contact input high, CAN DG input low.
9	Relay cycling test fault	Five consecutive gripper relay cycling failures.
10	Unintended movement fault	No CG or DG inputs and DZ turns off.
11	Governor overspeed fault	Governor opened up causing gripper input to turn on.
12	CG redundancy fault	CG contact input high, CAN CG input low

The Intelligent Car Station Board

Car inputs and outputs are controlled by the Intelligent Car Station board. This board may be mounted inside the car station, in the toe guard, or on the cartop. The board can handle up to 48 inputs and 48 outputs. If more are needed, expansion boards can be plugged into the car station board to provide up to 112 inputs and 112 outputs.

The expansion boards plug into the intelligent car station board through a 26-pin ribbon cable. Multiple boards can be plugged together to accommodate a wide variety of inputs and outputs. Any car function that would normally be wired to the car controller is wired at the car and the information passed over the neuron network through a combination of the Intelligent Car Station board and Expansion I/O boards.

Examples of these functions include car calls, car call lockout inputs, position indicator outputs (binary or line-per-floor), door operator control, and door device (open button, close button, safe edge, etc.) wiring.

An optional car top mounting kit may be purchased if the Intelligent Car Station board and / or expansion boards will not fit in the car station. The optional car top box will contain the Intelligent Car Station board and the Car Top Encoder. Additional terminal strips are provided inside the box to serve as a car top junction box. This optional mounting box must be ordered when the job is engineered due to the configuration of the encoder electronics assembly and differences in assemblies.

The Car Station board uses a LonWorks™ processor board that communicates with the main processor over the car high priority network. Power is supplied to the board through a 110 VAC to 18 VAC transformer mounted inside the car station (or optionally mounted on the cartop or the toe guard when the car station board is mounted in these locations). The power is wired to Car Station board connector CJ14.

The Intelligent Car Station board can accept up to 48 inputs and drive up to 48 outputs. The first 24 inputs on the board and the first 24 outputs on the board can be tied together via a header jumper for each input and output. This allows the user to wire the car calls with one wire instead of using one wire for the input and a second wire for the acknowledgment light.

If more than 24 inputs and outputs are required, the inputs and outputs must be tied together externally.

Note

If single wire car call wiring is used, the calls MUST be wired on the output side of the board (the side with the relays). This can only be done when the input commons and the acknowledgment light commons are from the same power supply.

Car Station Board Inputs

Inputs are connected on the side of the board opposite the blue relays. Inputs may be 24 VDC or 110 VAC. Inputs use a current limiting resistor in conjunction with bidirectional opto-couplers so AC or DC inputs can be used on the same board. All opto-couplers are socketed so, in the event of over-voltage damage, the components may be replaced instead of the entire board.

Figure 3.4 Car Station Board

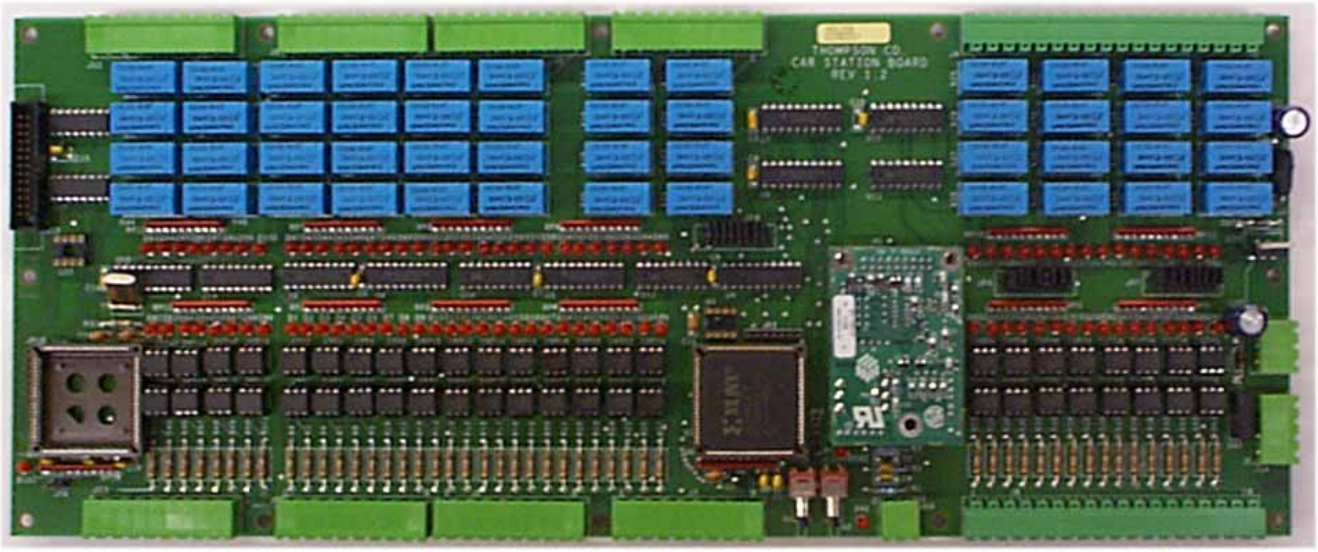

The first 18-pin connector on the board (CJ8) is reserved for car calls. CJ8 pins 16 - 9 will typically be the first 8 car calls with pins 17 and 18 used as commons. Pins 8 - 1 will typically be the next group of 8 car calls, again with pins 17 and 18 being the commons. After the first two groups of eight, remaining inputs are arranged in groups of 8 with the 9th pin on the connector being the common for those eight inputs. Please refer to the drawings package for details about Car Station wiring.

Car Station Board Outputs

Outputs are connected on the side of the board adjacent to the blue relays. Outputs are dry relay contacts and can drive signals up to 110 VAC at 5 amps.

The outputs are arranged exactly like the inputs. The first 18-pin connector is typically reserved for car call acknowledgment lights. Pins 16 - 9 will typically be the first 8 car call acknowledgment lights with the common for the light being hooked to pins 17 and 18. Pins 8 - 1 will typically be the next group of 8 call acknowledgment lights, again with pins 17 and 18 being the common. After the first two groups of outputs the remaining outputs are arranged in groups of 8 with the 9th pin being the common for those eight outputs.

Car Top Encoder

The car positioning system includes a two-inch wide perforated steel tape hung from the top of the hoistway to the bottom. Holes are spaced precisely every 3/4” on center and read by a position feedback encoder mounted on top of the car. The optical sensors are mounted in a unit referred to as “the stick” and are set up so car position can be determined within 1/16”. Position information is processed by a microprocessor located on the car top and sent to the Central Processor over the two-wire LON network.

The Car Top Encoder will allow the car to run with two of the six sets of sensors disabled. When the car arrives at a particular floor and the actual encoder value varies from the stored floor landing value by more than 10 counts an “Encoder Excess Deviation” fault message will appear on the car diagnostic monitor. If the first set of sensors becomes disabled (normally through dirt accumulation), an “Encoder Sensor Failure” message will appear on the car diagnostic monitor. This fault will not shut the car down because the control system is able to safely run with one set of sensors inoperable.

Two additional sensors are provided to sense tape guide wear. When these sensors detect worn guides, an “Encoder Excess Guide Wear” message will appear on the car diagnostic monitor.

A door zone magnet mounted at each floor is detected by controller door zone circuitry. It also updates position information to the microprocessor. Each floor magnet is encoded by length. The lowest floor magnet is 6 1/2” inches in length, the floor magnet above that is 7”, and the next floor magnet above that is 7 1/2”, continuing in 1/2” increments. If you had a forty-story building, the magnet for that floor would be about 26” long.

Encoder electronics stay energized for up to twenty five seconds after main line power to the controller has been lost. This allows the encoder to store the exact car position even if the car is sliding through the brake in the event of a sudden power loss. When normal power is restored there is no need for the encoder to re-synchronize to a floor because the car position was stored as soon as the car stopped after power was lost.

A learn trip is required during controller setup. During the learn trip, the exact length and location of each magnet in the hoistway is stored on an EEPROM (U5 on the encoder electronics board) and in the retentive memory of the MPU in the car controller. The learn trip is performed when the car is originally installed and should never need to be repeated. Even in the event that the Encoder board required replacement, the U5 EEPROM can be transferred from the defective board to the new board to retain exact floor positions. If this is done, a new learn trip is unnecessary.

On jobs where pretorque is provided, a 1 t0 9 volt analog signal is sent from a load transducer on the cartop to the Encoder Power Supply Board mounted beneath the encoder electronics board. The load signal is passed to the encoder electronics board, converted to a digital value, and transmitted to the central processor over the car LON network.

Typical cartop encoder wiring is shown in the following illustration.

Figure 3.5 Typical Cartop Encoder Connections

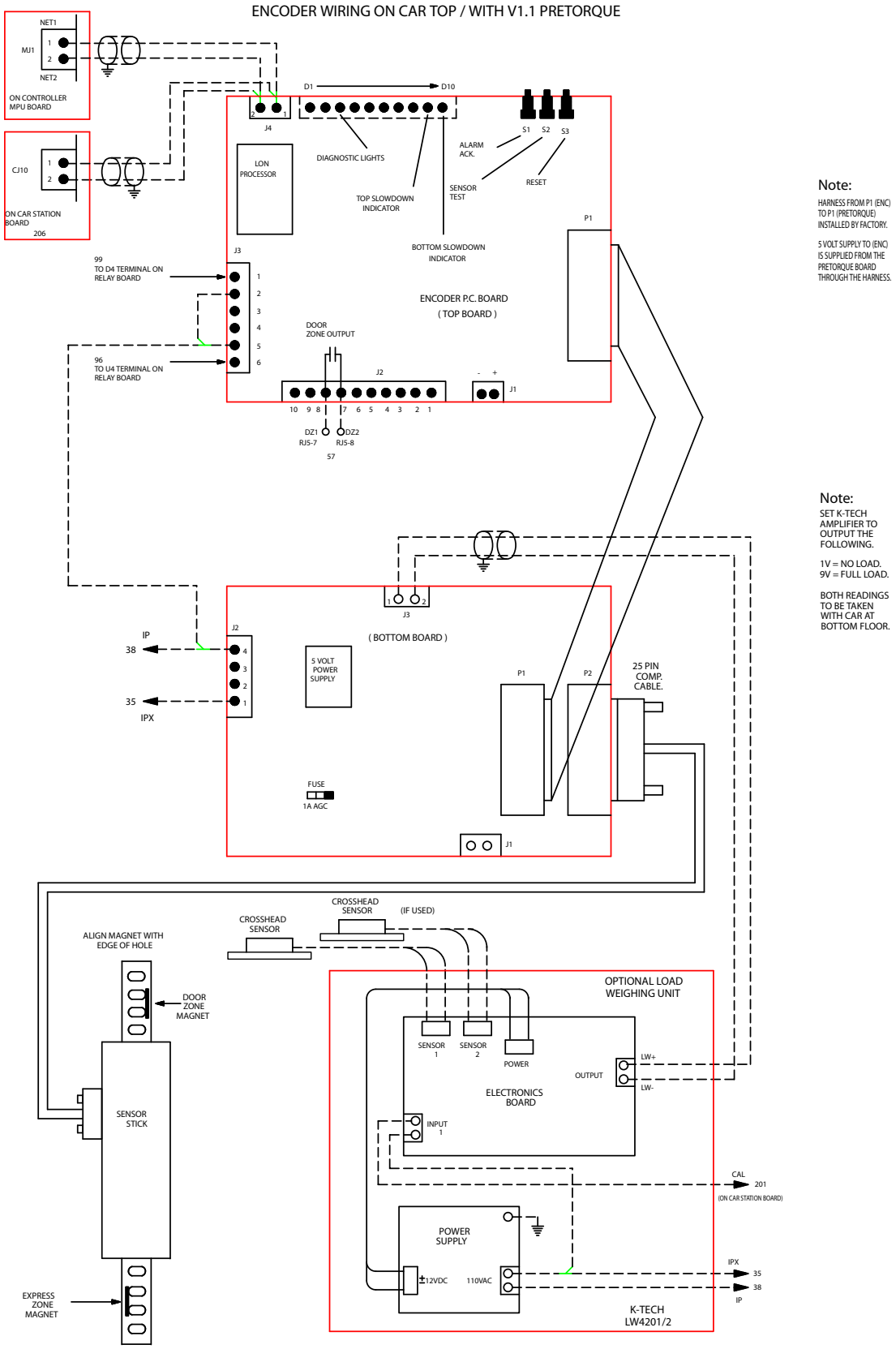

Digital Speed Reference with Curve Correction

IntellaNet develops an ideal pattern that is continuously corrected throughout the duration of a run based on encoder feedback plotted over time to give the microprocessor a speed feedback of its own. The car stops based solely on encoder position and does not need to transfer to an approach or leveling curve based on a leveling magnet as do most other systems.

The speed curve profile, door times, and other parameters are programmed on each car and adjusted on the car controller. Each controller is equipped with its own display card for adjustment and troubleshooting.

Encoder Diagnostics

Four push button switches are provided to diagnose problems with encoder sensors or communication. When a fault occurs on the encoder board, diagnostic LED D8 indicates the nature of the fault by flashing on and off. During normal operation, the LED is on continuously.

Five blinking patterns indicate abnormal conditions:

- Continuous blinking: Encoder is in learn mode.
- One blink then a pause: A light sensor on the sensor board is bad.
- Two blinks: Encoder has detected an excessive error fault when arriving at a floor.
- Three blinks: Encoder has been restarted and must be re-synchronized.
- LED is on and blinks off: Fault indicated has been cleared. Press the acknowledge button to restore the LED to continuously on.

The four push button switches operate as follows:

- S1 is used to acknowledge alarm conditions that have been cleared.
- S2 is used to check the operation of the stick sensors.
- S3 is used to reset the electronics.
- S4 is not used.

Normally, LEDs D1, D2, D5, D6, D9, and D10 indicate the state of terminal slowdowns and door zone sensors:

- D1 -When on, indicates the bottom door zone sensor is on.
- D2 -When on, indicates the top door zone sensor is on.
- D5 -When on, indicates the top terminal slowdown contact has been broken.
- D6 -When on, indicates the bottom terminal slowdown contact has been broken.
- D9 -When on, indicates the top terminal slowdown contact is closed.
- D10 -When on, indicates the bottom terminal slowdown contact is closed.

Pressing and holding switch S2 causes the state of the six encoder sensors to be displayed on LEDs D1-D6. If the car is moved at slow inspection speed, it is possible to see these LEDs sequentially blink on and off. If the LED associated with a sensor does not blink when the car is moved, it means that the associated sensor is bad and the sensor board must be replaced.

IntellaNet Pretorque

Pretorque is an optional feature usually supplied on gearless elevators to improve ride quality and floor-to-floor performance time by accurately measuring the load in the car through the use of a strain gauge mounted to the crosshead. As the doors close for a run, the weight value is measured and sent to the main processor to develop a pretorque signal to prevent the car from moving when the brake is released. The motor drive system is enabled prior to the brake being energized. When the motor drive system is enabled, a pretorque signal is sent to the motor drive processor to provide a specific amount of motor torque prior to the brake lifting. When the brake lifts, the motor will have sufficient torque to hold zero speed prior to acceleration. This results in smooth acceleration and improves floor-to-floor performance due to improved tracking characteristics of the motor drive system.

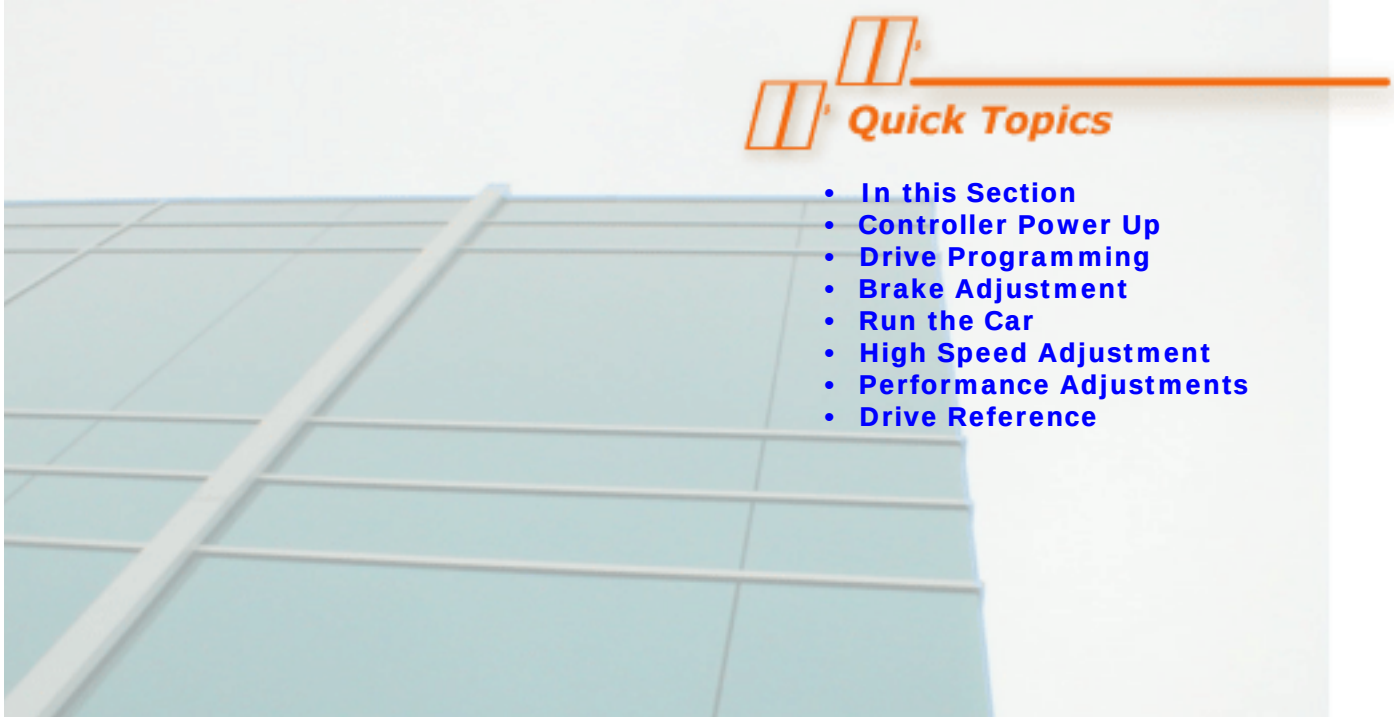

Magnetek DSD 412

In This Section

This section provides startup and high speed adjustment instructions for IntellaNet controllers using the Magnetek DSD 412 drive.

Before beginning startup and adjustment:

- Read Section 1 on Personal and Equipment Safety completely.
- Read Section 2 on Piping & Wiring completely.
- Read this Section completely.

Danger

Elevator control products must be installed by experienced field personnel. This manual does not address code requirements. The field personnel must know all the rules and regulations pertaining to the safe installation and running of elevators.

Controller Power Up

Danger

Perform the following procedures with power off the controller. Do not apply power until instructed to do so.

Continuity Tests

1. Refer to sheet 3 of the wiring diagrams. At the top of the page you will see the main line disconnect voltage. Verify that the main line voltage listed on the wiring diagrams matches that supplied. If not, contact MCE Technical Support before proceeding.
2. Refer to the figure below. Use an ohmmeter to check continuity between relay board terminals GOV1 and STP (safety circuit). If there is no continuity, refer to sheet 4 of the wiring diagrams and troubleshoot to locate the open.
3. With the meter on terminals GOV1 and STP, open each device in the safety circuit one at a time and confirm that each device will open the safety circuit.

Figure 4.1 Safety Circuit

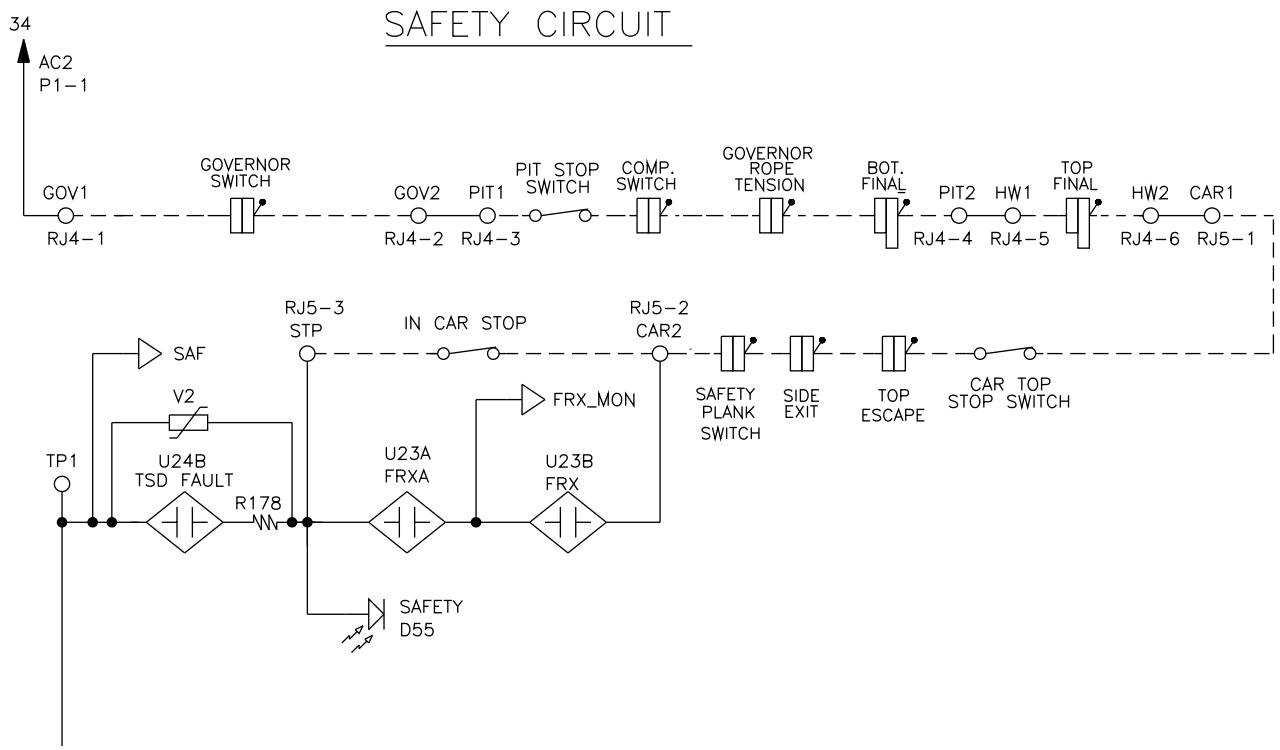

4. Open the governor switch.
5. Refer to the following illustration. Use an ohmmeter to check continuity between relay board terminals G1 and G2 (car gate switch). If there is no continuity, refer to sheet 4 of the wiring diagrams and troubleshoot to locate the open.
6. With the meter still on terminals G1 and G2, open the car gate switch. Confirm that opening the switch opens the car gate circuit.
7. If there is no rear door on the car, go to step 10. If there is a rear door, go to step 8.
8. Check continuity between relay board terminals G2 and G2R (rear car gate switch). If there is no continuity, refer to sheet 4 of the wiring diagrams and troubleshoot to locate the open.
9. With the meter still on terminals G2 and G2R, open the car rear gate switch and confirm that opening the switch opens the rear car gate circuit.
10. If there is no rear door on the car, install a permanent jumper between relay board terminals G2 and G2R.

Figure 4.2 Gate Circuit

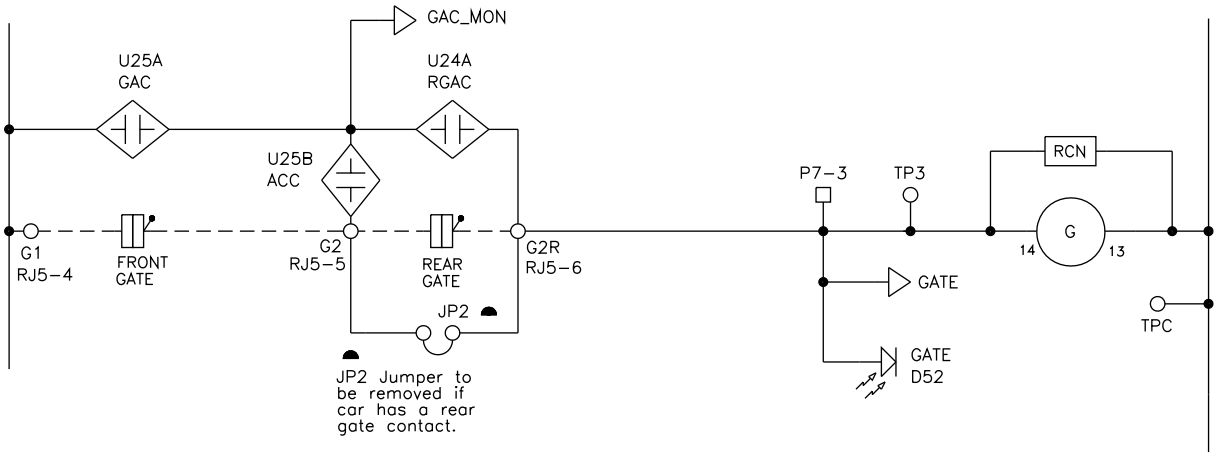

11. Refer to the following figure. Check continuity between relay board terminals L1 and L3A (door locks). If there is no continuity, refer to sheet 4 of the wiring diagrams and troubleshoot to locate the open.
12. With the meter still on terminals L1 and L3A, verify that opening any door lock will open the circuit. Test all locks individually and confirm that the lock circuit is opened by any lock.

Figure 4.3 Relay Board Terminal Continuity

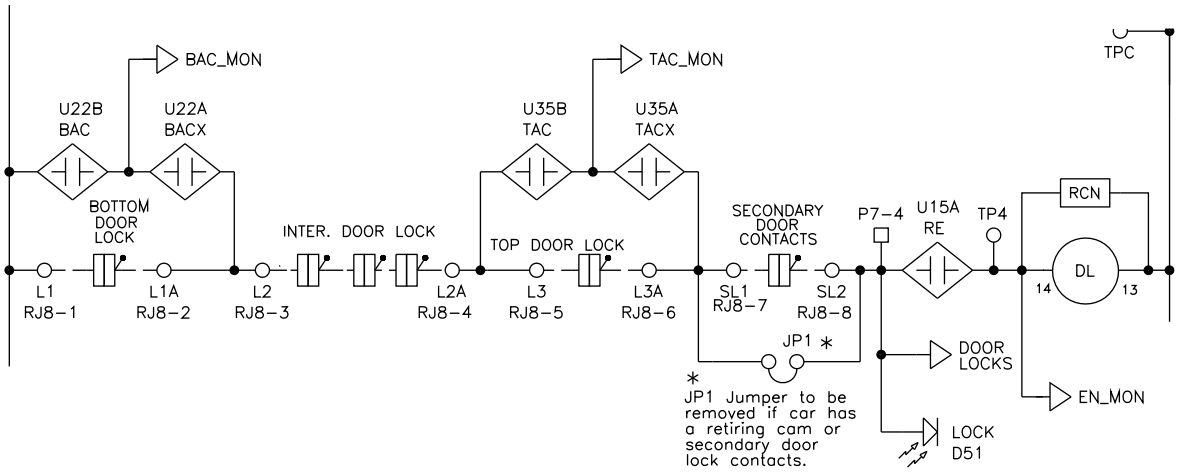

13. If this car has seismic service go to step 14. If not, go to step 18.
14. Refer to sheet 5 of the wiring diagrams and the figure below. With an ohmmeter, measure from relay board terminal AC2 to terminal CTOP. If the car top inspection switch is in the automatic position there should be continuity. If not, check the switch and the wiring. Correct as necessary.

Figure 4.4 Relay Board to Cartop Board

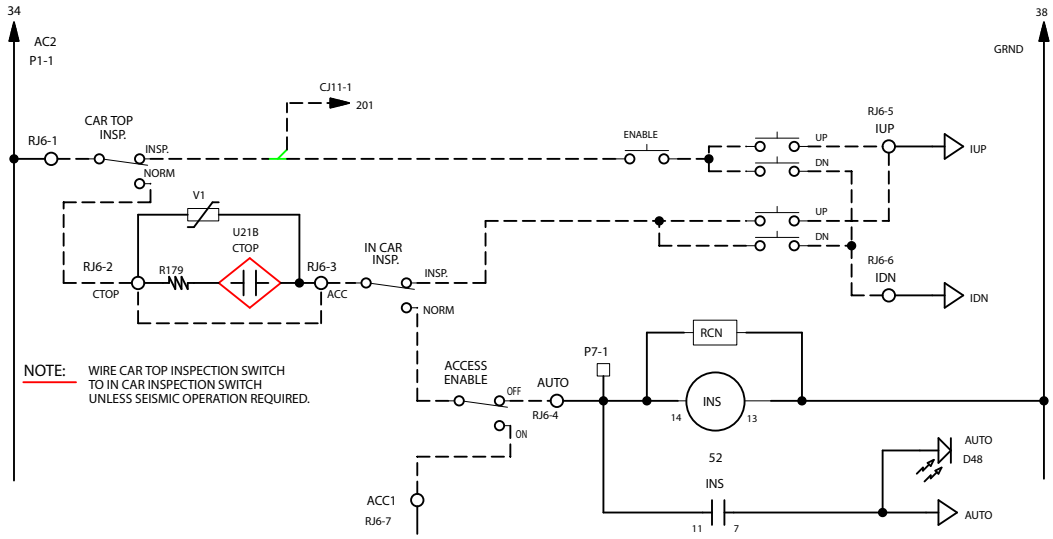

15. Confirm that placing the switch in the inspection position opens the circuit. Place the switch in the automatic position for initial power up.
16. Place an ohmmeter from relay board terminal ACC to terminal AUTO. If the in-car inspection switch is in the automatic position, there should be continuity. If not, check the switch and the wiring. Correct as necessary.
17. Confirm that placing the switch in the inspection position opens the circuit. Place the switch in the automatic position for initial power up.
18. Refer to sheet 5 of the wiring diagrams and the preceding illustration. Place an ohmmeter from relay board terminals AC2 to AUTO. If the car top inspection switch and the in-car inspection switches are in the automatic position, there should be continuity. If not, check the switches and wiring. Correct as necessary.
19. Confirm that placing either switch in the inspection position opens the circuit. Place both switches in the automatic position for initial power up.
20. Refer to sheet 5, line 55 of the wiring diagrams. Use an ohmmeter to check continuity between relay board terminals UN1 and UN2 (up normal limit). Confirm that the switch is closed when the car is away from the top floor. It must be set to open 1” below the top floor and stay open through the entire stroke of the buffer.
21. Refer to sheet 5, line 55 of the wiring diagrams. Use an ohmmeter to check continuity between relay board terminals DN1 and DN2 (down normal limit). Confirm that the switch is closed when the car is away from the bottom floor. It must be set to open 1” above the bottom floor and stay open through the entire stroke of the buffer.
22. Place the relay board inspection switch in the down (inspection) position.
23. Place the relay board Door Disable switch in the down (disable) position.

Note

Have someone stand by the disconnect switch the first time power is applied to the controller. If the car starts to move or any other dangerous condition is noted, immediately remove power.

24. Apply power to the controller.

Parameter Access

Danger

The controller now has power applied. Some of the following procedures are performed with power on. Use extreme caution and observe all appropriate safety precautions.

1. While the controller is powering up, a message on the display card prompts you to press “1” to alter the parameters. Press “1” on the keypad to access the parameter menus at this time.
2. Press the “#” key until the cursor (the flashing square) is in front of Miscellaneous Parameters. Press the “0” key to select the Miscellaneous Parameters menu.
3. Set Inspection Speed to 000 fpm.
4. Set Main Contactor Hold Time to 10 (1 second).

Note

If the hoist motor brake is sluggish, set Main Contactor Hold Time to a larger value. This parameter controls how long the drive stays enabled after a stop is demanded. If it is too short, the car will roll before the brake sets fully on stop.

5. Using the “#” key, select Return and press the “0” key to return to the main menu.
6. Select (#) and access (0) Motion Parameters.
7. Set Max Speed to the contract speed of the car. Return to the main menu.
8. Select the Terminal Slowdowns menu.
9. Select Press Enter to Disable Limit Section. Press the “0” key. The message “Limit Section of Relay Card Disabled! Section is Disabled Until Relearned” will appear. Press any key to return to the previous sub-menu.
10. Select Return to Main Menu. Select Write Values to Non Volatile Memory.
11. A dialog box will ask if you are sure you want to save the values. With the cursor in front of Yes, press “0.”
12. A message will appear confirming that the values have been saved. Exit the menu system by pressing the reset button (S1) on the MPU board.
13. While powering up, the MPU establishes communication with the Car Top Encoder and Car Station. If these devices are not connected, the following message will appear:

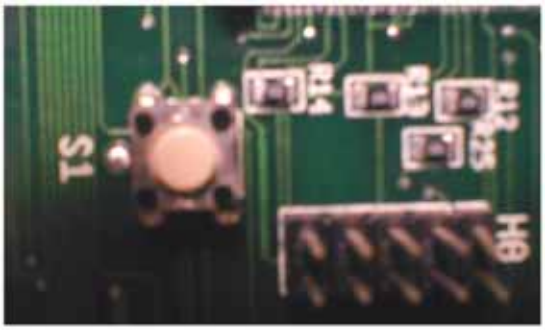

“Incompatible LON Software or Car Station Communication Failure. Place Car on Inspection and then Press 2 For Inspection Operation Only.”

14. Make sure the inspection switch on the relay board is switched down to INSP. Press the 2 on the keypad. The diagnostic screen will appear on the monitor.

Initial relay board setup is complete. The drive must now be programmed.

Drive Programming

Use the Magnetek factory manual as a reference. Follow the start up and adjusting procedures here.

The drive has been modified to meet MCE specifications. If drive replacement is ever required, contact MCE Technical Support. MCE will not accept any drive for warranty repair without a Return Material Authorization (RMA) number issued by Technical Support.

Once the controller has been powered up, the drive must be programmed to interface correctly with the equipment on the job site. The MCE Testing Department has pre-programmed the drive based on the information provided in the survey but it is important to confirm ALL parameters before attempting to run the car.

The drive may fault on initial power up due to incorrect parameters. This is normal and may be ignored at this time.

1. To use the drive keypad, press the up arrow. The display should change to a 0. Press the up arrow again to display a 1. Press the DATA/CTN key to display the value programmed for parameter 1.
2. Parameter #1, Current Limit, should be set to 275. If it is not, press the up or down arrow until 275 is reached. Press ENT to save the value.

Note

Saved values are only held in drive volatile RAM at this time. Powering down the drive or pressing the RESET button will cause this data to be lost. For the data to become permanent, it must be saved to drive non-volatile RAM. You do not need to perform the save procedure until you are told to do so in step 21.

3. Access parameter #3. Enter the motor nameplate rated armature current in amps. Press ENT to store.
4. Access parameter #7. Enter the motor nameplate rated armature voltage in volts. Press ENT to store.
5. Access parameter #9. Enter the nominal AC input voltage to the drive applied on terminals L1, L2, and L3. Press ENT to store.
6. Access parameter #10. Enter the pulses per revolution (PPR) of the motor encoder. This data can usually be found on the sticker attached to the encoder. Press ENT to store.
7. Access parameter #11. Enter the motor nameplate RPM. Press ENT to store.
8. Access parameter #16. This is the gearless ratio of the encoder. If the encoder is mounted to the motor shaft, set this value to 1.000. If the encoder is driven by a wheel riding on the drive or brake sheave, calculate the correct value: Sheave diameter / encoder wheel diameter = value. Press ENT to store.
9. Access parameter #17. Enter the contract speed of the car in feet per minute (FPM). Press ENT to store.
10. Access parameter #21. Enter a value of 6.5. Press ENT to store.
11. Access parameter #49. Enter the running field current in amps. If field weakening is not used, enter the full field current in amps. Press ENT to store.

12. Access parameter #50. Enter the full field current in amps. This may or may not be the value on the motor nameplate, as the fields may have been re-wired. If you are unsure, check the survey data to see what the field current was with the old controller. Press ENT to store.
13. Access parameter #52. Enter the full field voltage in volts. Press ENT.
14. Access parameter #53. Enter the standing field current in amps. This value is typically half of the full field value from parameter 50. Press ENT.
15. Access parameter #56. If the motor uses field weakening, enter a value of 90. If field weakening is not used, enter a value of 130. Press ENT.
16. Access parameter #57. If the motor uses field weakening, enter a value of 70. If field weakening is not used, enter a value of 130. Press ENT.
17. Access parameter #97. Enter a value of 0.7. Press ENT.
18. Access parameter #98. Enter a value of 0.7. Press ENT.
19. The stored values must now be saved to drive non-volatile RAM. Access parameter 994. Press the DATA/FCTN key. The display will read “rESt.” Press the up arrow. The display will change to “SAVE.”
20. On the upper, right-hand side of the drive, there is a small slide switch. This switch is the NVRAM Protect switch, S3. Flip this switch to the up position. The red LED “NV RAM NOT PROTECTED” will light.
21. Press the ENT key on the drive. The display should now read “994.” Flip the NVRAM Protect switch back to the down position. The values are now saved.

Self Tune

The drive has a self tuning feature that dynamically calculates armature resistance and inductance including the choke and filter used in series with the armature. It also measures motor field resistance and inductance.

After the self-tune, the calculated values are stored in the following parameters:

- #613 Measured Motor Resistance
- #614 Measured Motor Inductance
- #615 Measured Field L/R time constant

These values must be transferred and stored in the proper locations.

- #613 value transferred to Function #4 Arm Ohms
- #614 value transferred to Function #6 Arm L
- #615 value transferred to Function #51 Field L/R

Use Function #997 for self-tuning.

Note

Motor fields must be at full field current during self-tune. Display parameter #612 must be the same as parameter #50. A motor field fault will result if parameter #612 is less than parameter #50 during self-tune.

Danger

Have someone standing by the main disconnect during this procedure in case the car starts to move. If it moves, immediately open the disconnect switch.

1. Remove the field wires to the brake coil at terminals BK1 and BK2. This will prevent any inadvertent movement of the car.
2. On the drive keypad, access parameter 997.
3. Flip the NVRAM Protect switch (S3) to the up, or not protected position. The red LED on the drive should light.
4. Press the DATA/FCTN key. The display will change to “Entr.”
5. Place the Relay Board inspection switch in the INSP position.
6. The self-tune feature requires the drive be placed in the run mode. Using the Up/Down inspection toggle switch on the Relay Board, run the car up. The brake will not lift and the inspection speed command has been set to zero so the car will not move.
7. Press the ENT key on the drive keypad. The display will read “tESt.” The motor contactor should pick and drop several times. Current pulses will be sent to the motor armature and motor field.

Note

If the drive detects a fault during self tune, it will abort self tune and display an error message. Please refer to “Drive Faults” on page 4-22.

8. When self-tune is complete, the display will read “PASS.” Release the Relay Board Up switch. After the M contactor drops out, reconnect the brake wires.
9. Press the DATA/FCTN key to return to parameter select mode. Using the down arrow, scroll to parameter 613. Press the DATA/FCTN key to view the value. Write the number down. It will be stored in parameter 4, Armature Resistance.
10. Access parameter 614. Note the value. It will be stored in parameter 6, Armature Inductance.
11. Access parameter 615. Note the value. It will be stored in parameter 51, Field L/R.
12. Access parameter 4. Change the value to that recorded from parameter 613.
13. Access parameter 6. Change the value to that recorded from parameter 614.
14. Access parameter 51. Change the value to that recorded from parameter 615.
15. The programmed values must now be saved to the drive non-volatile RAM. Access parameter 994. Press the DATA/FCTN key. The display will read “rESt.” Press the up arrow. The display will change to “SAVE.”
16. On the upper, right-hand side of the drive, there is a small slide switch. This switch is the NVRAM Protect switch, S3. Flip this switch to the up position. The red LED “NV RAM NOT PROTECTED” will light. Press the ENT key on the drive. The display should now read “994.” Flip the NVRAM Protect switch back to the down position. The values are saved.
17. Press the drive RESET button. The drive will reset and perform a power up. Assuming that the drive is programmed and wired properly, the display will read “P-UP.” If a fault occurs, the fault will be displayed on the drive. Please refer to “Drive Faults” on page 4-22 if needed.
18. Reset the MPU (switch S1) and access the parameter menu.
19. Select the Miscellaneous Parameters menu. Press the “0” key.
20. Set Inspection Speed to 045 fpm. Return to the main menu.
21. Select Write Values to Non Volatile Memory. Press the “0” key.
22. A dialog will appear asking if you are sure you want to save the values. With the cursor in front of Yes, press “0.” A message will appear confirming that the values have been saved. Exit the menu system by pressing the reset button (S1) on the MPU.

Brake Adjustment

Note

The brake assembly and all pins should be cleaned thoroughly and spring tension set properly to hold 125% of car capacity prior to adjusting the brake driver. Brake shoes should be checked to insure at least 95% surface contact. If spring tension is changed after this adjustment, the brake driver will need to be re-adjusted.

1. Refer to Figure 4.5, make sure that the brake coil has been connected properly to the controller.
2. Connect a meter across the F- and F+ terminals of the brake driver. Set the meter range high enough to measure the brake lifting voltage level for the job.
3. With no inputs on at the J1 terminal of the brake driver, the V/I-4 pot will be selected. Adjust the V/I-4 pot fully counterclockwise.
4. Turn the ACC1 pot fully clockwise. This will allow rapid response of the brake regulator from a lower to a higher voltage level.
5. Turn the DEC1 pot fully clockwise. This will allow rapid response of the brake regulator from a higher to a lower voltage level. This will also help prevent excessive arcing on the contacts of the BK relay.
6. Turn main line power OFF. TEMPORARILY place a jumper from J1-1 on the brake driver to AC2 on the controller terminal block.
7. Turn main line power ON. Adjust the V/I-1 pot until brake pick voltage required for the job is obtained.
8. Turn main line power OFF. Remove the jumper from terminal J1-1 on the brake driver and place it at J1-2.
9. Turn main line power ON. The LED over the V/I-2 pot will be illuminated. Adjust the V/I-2 pot until approximately 60% brake lifting voltage is obtained, or if available, the recommended brake holding voltage from the manufacturer.
10. Turn main line power OFF. Remove the jumper from terminal J1-2 on the brake driver and place it at J1-3.
11. Turn main line power ON. The LED over the V/I-3 pot will be illuminated. Adjust the V/I-3 pot until approximately 40% brake lifting voltage is obtained, or if available, the recommended brake re-level voltage from the manufacturer.
12. Remove the jumper from J1-3 to AC2.
13. Preliminary set up of the brake driver is now complete.

Figure 4.5 Brake Control

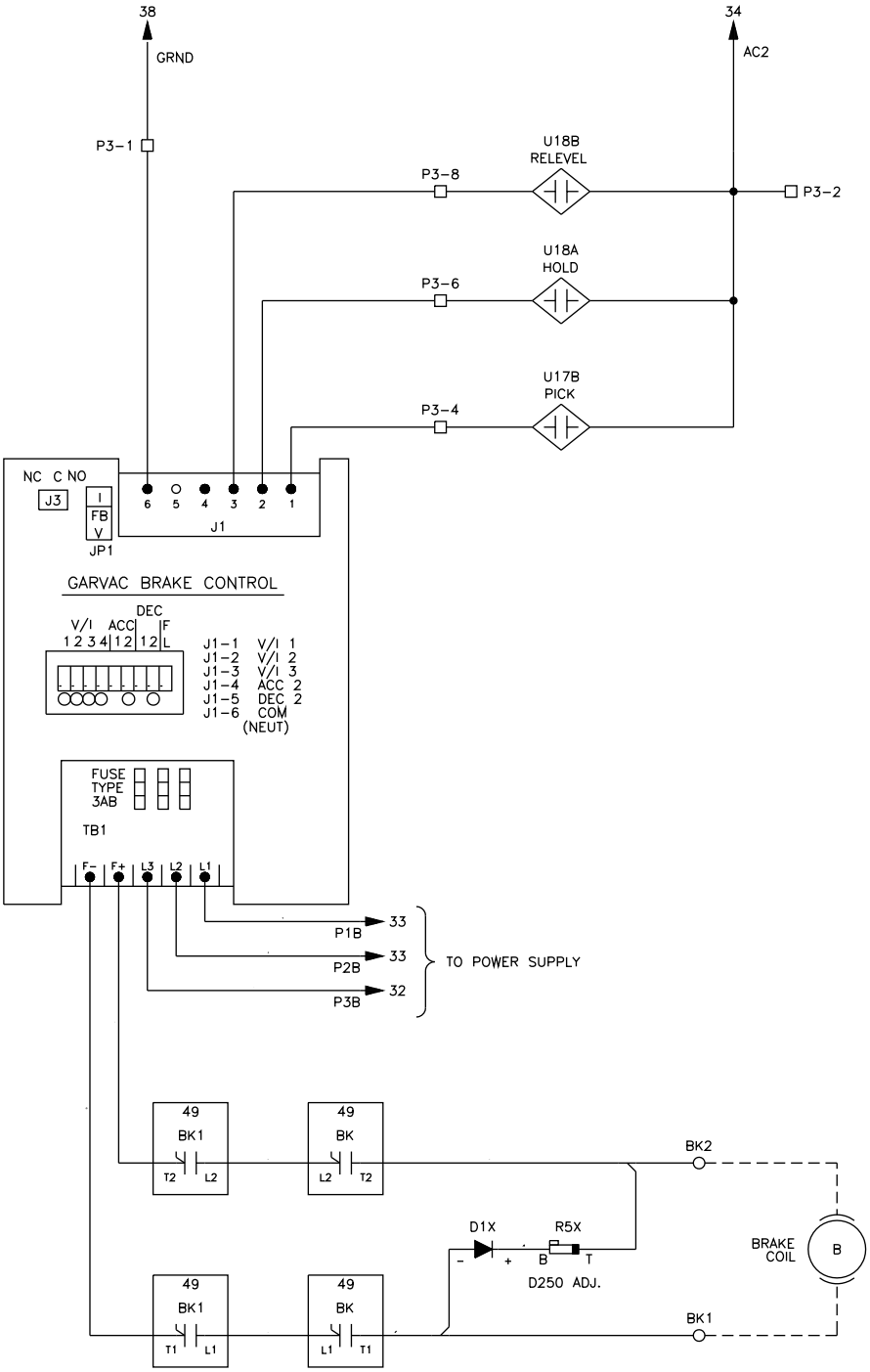

Run the Car

Danger

Have someone standing by the main line disconnect during this procedure in case the car starts to move uncontrollably. If it does, immediately open the disconnect switch.

1. Confirm that the relay board inspection and door disable switches are both in the down position.
2. Unplug the 'DE' relay from the controller.
3. LED D55 on the relay board should light and the 'G' relay should energize. If not, refer to sheet 4, line 43 of the wiring diagrams to determine why.
4. Attempt to run the car using the inspection up/down toggle switch on the relay board. While holding the toggle up or down, confirm that the 'DL' relay on energizes. If not, refer to sheet 4, line 45 of the wiring diagrams to determine if the door locks are open.
5. After the 'DL' relay energizes, the 'SR' relay should pick. If not, refer to sheet 4, line 47 of the wiring diagrams to determine why.
6. Release the inspection up/down toggle switch. Plug in the 'DE' relay.
7. Attempt to run the car up using the inspection up/down toggle switch. Hold the toggle switch up until the car starts to move. If the car does not run up at a controlled speed, check the following:

If this happens:	Do this:
Car runs up very fast until drive trips.	Swap wires TB1-4 (B) and TB1-5 (B-).
Car runs down very fast until drive trips.	Turn off main line power and wait 60 seconds. Swap motor field connections F1 and F2.
Car runs down at a controlled speed.	Turn off main line power and wait 60 seconds. Swap motor field connections F1 and F2. Swap wires TB1-4 (B) and TB1-5 (B-).

Note

The drive may fault while attempting to run. If it faults on an F98 (Tach Loss), TEMPORARILY increase drive parameter 15 (Tach Sense) to 40 and again attempt to run the car. Please refer to "Drive Faults" on page 4-22 for a comprehensive list of drive faults and corrective actions.

8. On the drive keypad, access parameter 602, Speed Reference. Press the DATA/ FCTN key to display the speed command to the drive.
9. Using the inspection up/down toggle switch on the relay board, run the car. If the car is running down, the polarity of the speed command displayed on the drive will be negative. If the car is running up, the polarity will be positive (no displayed sign). If these values are reversed, the speed reference signal to the drive at TB1-68 to TB1-63 is reversed. Stop the car and correct if necessary.

10. While using the inspection toggle switch to run the car, measure car speed using a hand-held tachometer. The car should be moving at approximately the same speed as displayed on the drive. If not, modify drive parameter 11 (Motor RPM) to achieve the correct speed.
11. Watch the brake while running the car to ensure it is operating properly. If necessary, refer to preceding brake adjustment instructions.
12. The controller is now set up for inspection operation. Please refer to “High Speed Adjustment - Magnetek DSD 412” on page 4-15 when you are ready to perform the high-speed adjustment.

High Speed Adjustment - Magnetek DSD 412

Note

Before proceeding with high-speed adjustment, the hoistway switches must be set up properly. Access the top of the car and confirm that the following devices are set correctly:

- The bottom final limit must be set to open 6” below the bottom floor.
- The bottom directional limit must be set to open 1” above the bottom floor. When the car is sitting floor level at the bottom floor, the limit switch must be open.
- The top directional limit must be set to open 1” below the top floor. When the car is sitting floor level at the top floor, the limit switch must be open.
- The top final limit must be set to open 6” above the top floor.
- If the car has hoistway access, two additional limit switches must be installed in the hoistway. The first switch is the bottom access zone switch. This switch must be set such that it is closed while the car is floor level at the bottom access floor. It must remain closed until the bottom of the toe guard is level with the top of the hoistway entrance.
- The top access zone switch must be set such that it will be closed while the car is floor level at the top access floor. It must remain closed until the top of the car is level with the sill of the hoistway entrance.

MPU Initial Set Up

1. Press the reset (S1) button on the MPU. While the MPU is powering up, a message will be displayed prompting you to press 1 if you want to alter parameters. Press the 1 key at this time.
2. Refer to Section 9 of this manual. Go through all of the parameter screens. Set all parameters applicable to the job configuration.
3. Pay no attention to the Floor Landing Values at this time. These numbers will mean nothing until a learn trip is completed. Set Maximum Allowed Speed Differential to contract speed. This value will be adjusted later after completing terminal slowdown adjustments.
4. Write the values to MPU Non-Volatile memory.
5. Press the reset (S1) button on the MPU.
6. Allow the MPU to power up. If communication is established to the Car Station board and the Car Top Encoder, the diagnostic screen will be displayed. If the MPU cannot communicate with the Car Station board, the following message will be displayed:

“Incompatible LON Software or Car Station Communication Failure. Place Car on Inspection and then press 2 for Inspection Operation Only.”

7. If this message appears, check power to the Car Station board and check LON communication network at MPU J1 and Car Station J10.
8. If the MPU cannot establish communication with the Car Top Encoder board, the following message will be displayed: “Encoder Communication Failure.”
9. If this message appears, check power to the Car Top Encoder board and check the LON communication network at MPU J1 and Car Top Encoder J4.

The MPU has been programmed. Initial set up of the relay board is complete. A hoistway learn trip must be now be performed.

Hoistway Learn

Verify encoder installation is complete:

- Tape and all door magnets installed.
- Stick mounted properly; stick cable connected to encoder electronics box.
- U4 terminal limit wired to J3-6 on the encoder processor board. D4 terminal limit wired to J3-1 on the encoder processor board.
- IP & IPX from controller wired to J2-1 & J2-4 on the encoder power supply board.
- IP wire from controller wired to J3-2 and J3-5 on the encoder processor board.
- Shielded pair communication cable to the MPU connected to encoder board J4 connector. Cable shield taped off at encoder end.
- Shielded pair communication cable to Car Station board connected to J4 on the encoder and J10 on the Car Station board. Cable shield taped off at Car Station board end.

1. Make sure the controller inspection switch is in the down, or INSP position.
2. Move the car so it is level with the bottom floor. Place both the cartop and the in-car inspection switches in the normal position. The learn trip will not initiate unless the car is on automatic operation.
3. Confirm that the DOL, EE, and SE inputs are off. The learn trip will not initiate if these inputs are not correct.

Note

If the DCL and DOL inputs are reversed (DOL on and DCL off) and the doors are closed, the parameter DCL/DOL Closed At Limits is not set correctly. Access the Door Parameters menu and change the value of the parameter. Make sure to save to MPU non-volatile memory.

4. Open the main line disconnect and leave it open for at least one minute. This will ensure that any latched fault on the encoder will clear before the learn trip is initiated.
5. Close the main line disconnect. While the controller is powering up, press the “1” key on the display card to access the parameter menus.
6. Switch the relay board inspection switch to the up or NORM position.
7. From the main menu, select the Pretorque, Learn Trip menu.
8. Select Press Enter for Learn Trip. Press the “0” key.

The car will start the learn trip and move up the hoistway at about 24 fpm. It should stop as soon as it reaches the top floor door zone magnet. After reaching the top, the Display Card will flash the message “Learn Trip Completed Successfully.” The encoder card non-volatile memory will store the positions of the magnets in the shaft.

9. The floor values must now be sent from encoder non-volatile memory to the MPU: Go to the Floor Landing Values screen. Select Press Enter for Floor Landing Values from the Encoder. Press “0” to send the values to the MPU board.
10. The values will not take effect until stored to MPU nonvolatile memory. Return to the main menu. Select Write Values to Non Volatile Memory. Press the “0” key.
11. A dialog will appear asking if you are sure you want to save values. Select Yes, press “0.”
12. A message will appear confirming that the values have been saved. Open the main line disconnect and leave it off for at least one minute.

Hoistway learn is complete.

Preliminary Adjustments

1. Place the car in the center of the hoistway. Mark the cables with chalk when the car crosshead and the counterweight crosshead are exactly adjacent to each other.
2. If the controller is not set up for seismic operation, go to step 5.
3. On the monitor, observe the encoder position on the diagnostic screen. Write this value down.
4. Access car parameters menu VIP, Medical, Earthquake Parameters. Enter the value recorded in step 3 into Counterweight Zone. Save to non volatile memory.
5. Move the car to a convenient floor. Place 40% of rated capacity in the car.
6. On inspection, run the car so it is about 10 feet above the center of the hoistway.
7. Go to parameter 611 (measured armature current) in the drive and press the data/function key.
8. Watch the drive display. Run the car down through the center of the hoistway. Write down the amperage displayed when the car passes by the chalk mark on the cables. The value may vary slightly, so make a few passes and average the result.
9. Place the car about 10 feet below the center of the hoistway.
10. Watch the drive display. Run the car up through the center of the hoistway. Write down the amperage displayed when the car passes by the chalk mark on the cables. The value may vary slightly, so make a few passes and average the result.
11. Ignoring whether the recorded values were positive or negative, if the value recorded while the car was running up was greater than the value running down, the car is too heavy. Remove 100 pounds of weight from the car and repeat steps 8 through 10 until the recorded values are equal, but of opposite polarity.
12. Ignoring whether the recorded values were positive or negative, if the value recorded while the car was running down was greater than the value running up, the car is too light. Add 100 pounds of weight from the car and repeat steps 8 through 10 until the recorded values are equal, but of opposite polarity.
13. When the values are equal, but of opposite polarity, the car is balanced. Check how much weight is in the car. It should be between 40 and 50% of the rated capacity. If not, the counterweight needs to be adjusted. If the car is too heavy, weight needs to be added to the counterweight to get the car balanced between 40 and 50% of the rated capacity. If the car is too light, weight needs to be removed from the counterweight.
14. If adjustments are made to the counterweight, repeat steps 10 through 12 until balanced load is in the car. Leave the weights in the car at this time.

Floor Runs

Note

Stay away from the terminal floors while making the runs described here.

One Floor Run Up & Down

Using the keypad on the display card, make a one floor run up and a one floor run down in the middle of the hoistway. Referring to Section 9 - Parameters, adjust motion parameters to achieve the desired ride.

Two Floor Run Up & Down

Using the keypad on the display card, make a two floor run up and a two floor run down in the middle of the hoistway. Referring to Section 9 - Parameters, adjust motion parameters to achieve the desired ride.

Multi-Floor Run Up & Down

Using the keypad on the display card, make a multi-floor run up and a multi-floor run down in the middle of the hoistway. Referring to Section 9 - Parameters, adjust motion parameters to achieve the desired ride. Continue making multi-floor runs until the system demands contract speed.

The actual speed of the car may not reach contract speed. Do not change any parameters to make the car go contract speed. This will be adjusted next.

Contract Speed

1. Using the controller keypad, run the car at high speed. Watch the diagnostic screen. Check that the actual car speed shown on the screen is the contract speed of the car. If not, adjust drive MOTOR RPM parameter (#11) to obtain contract speed.
2. On gearless machines with the motor encoder driven by a wheel on the drive or brake sheave, modify parameter 16, Gearless Ratio, to obtain exact contract speed from the machine.
3. Run the car to a floor near the bottom of the hoistway. Place full load in the car.
4. Disable the car doors. On the drive, access parameter 610 (Motor Armature Voltage). Press the data/function key to display armature voltage.
5. Enter a car call near the top of the hoistway. While the car is running up at contract speed, monitor the armature voltage.
6. After the car stops at the desired floor, compare the observed armature voltage to the value on the motor nameplate. If the observed armature voltage is above the value on the motor nameplate, reduce parameter 49, Weak Field Current, until nameplate armature voltage is obtained while the car is running up with full load.

Note

If no change in armature voltage is observed, check parameters 56 and 57. These parameters control the speed at which the field is weakened and strengthened. Set parameter 56 to a value of 90, and parameter 57 to a value of 2. 70.

7. If the observed armature voltage is below the value on the motor nameplate, increase parameter 49 until nameplate armature voltage is obtained while the car is running up with full load.

Note

If the car has a geared machine, field weakening will not be required. Increase parameter 50, Full Field Current, until motor nameplate armature voltage is obtained while the car is running up at contract speed with full load. BE CAREFUL NOT TO EXCEED THE NAMEPLATE FULL FIELD CURRENT VALUE OR THE FIELDS MAY BE DAMAGED.

8. Run the car to a floor near the bottom of the hoistway. Place a car call near the top of the hoistway. After the car stops, access the scope screen on the monitor. Observe the first 5 seconds of the run. If the run appears smooth, with no distinct ‘step’ in the acceleration rate, go to step 9. If there is a step, decrease parameter 57, Field Weaken Speed, in the drive by a value of 5 until the step is completely gone. Go to step 10.
9. Increase parameter 57, Field Weaken Speed, in the drive by a value of 5. Run the car up and observe the scope screen. Keep increasing parameter 57 until a step is just seen in the acceleration, then decrease parameter 57 until the step is just gone.
10. Permanently save all drive parameters using function 994.

Preliminary controller adjustment is complete. Go to Section 7 and perform the terminal slowdown set up. Return to the next topic in this section for final adjustments to ride quality.

Ride Quality and Performance Adjustments

1. Enable the car doors.
2. Remove the appropriate amount of weight and ride the car, staying away from the terminal floors. Make any necessary adjustments to the speed curve.
3. Remove weight from the car, approximately 100 pounds at a time. Staying away from the terminal floors, observe one floor, two floor and multi floor runs to be sure that the car rides well under all load conditions.

Drive Tracking

Drive tracking is the most critical adjustment for high quality ride and superior performance. If the drive does not track the speed command well, ride quality will not be acceptable.

To determine how well the drive is tracking the speed command, access the scope screen on the monitor. Enter various calls in the system and compare the desired car speed to the actual car speed. When the car decelerates, particularly coming out of high speed, there will be a slight delay between the desired speed and the actual speed. This delay should be between 150 milliseconds (0.15 seconds) and 250 milliseconds (0.25 seconds). If the delay is longer, or the car is overshooting, undershooting, or 'spotting' coming into the floor, the drive needs to be adjusted.

Four (4) primary parameters are used to achieve good tracking:

- 40 (Response): Adjusts how closely the drive tracks the speed pattern. Typical values range from 5 to 8. The higher the number, the closer the tracking. Too high a number will cause vibration in the car, mostly noticed at slowdown. Too small a value may cause the car to overshoot the floor because the car is not tracking the pattern closely enough.
- 41 (System Inertia): Inertia of the elevator system. Typical values are from 0.75 to 2.5. Too large a number may cause vibration. Too small a number will cause the speed regulator to become sluggish.
- 42 (Stability): Adjusts speed regulator damping. Usually left at the default of 1.0.
- 8 (Current Regulator Crossover): Adjusts current regulator bandwidth. Typically left at the default of 500. Too large a number will cause vibration in the car, usually at full speed or going into or out of full speed. Too small a number will cause the motor to become sluggish.

If drive tracking needs to be improved:

1. Determine motor base speed. Base speed is the motor speed at which the motor is turning with full field and lifting full load. If the machine is geared and not using field weakening, proceed to step 4.
2. To determine base speed, TEMPORARILY set drive parameter 11, Motor RPM, to 80% of its present value. Set drive parameters 56 and 57 to a value of 130. Access the system motion parameters. Modify the “MAX SPEED” parameter to 80% of contract speed. Modify “ACCEL RATE” to 3.0, and “JERK RATE” to 6.0.
3. Place full load in the car. Disable the doors. Access drive parameter 610, Motor Armature Voltage. Place a car call and allow the car to run up. Monitor the motor armature voltage. If the voltage is low, increase drive parameter 11, Motor RPM, until the voltage is at the value on the motor nameplate while the car is running up. If the armature voltage is high, reduce parameter 11 until nameplate armature voltage is obtained while running in the up direction.
4. Remove weights so balanced load is in the car. Access drive parameter 611, “Motor Armature Current.”
5. Place a car call several floors away so the car will be able to reach base speed. Monitor the display on the drive during acceleration and deceleration. Record the average value for accelerating current and decelerating current.
6. Access the scope screen on the display card. Look at the first 5 seconds of motion. Ignoring the initial take off and transition from acceleration to top speed, estimate, if the acceleration had occurred at a constant rate, exactly how long, to the nearest tenth of a second, it would take for the car to go from zero to top speed. Record this number.
7. Using the following formula, calculate drive parameter 41, System Inertia.

   {(Accel Current - Decel Current) / 2} / (Nameplate Armature Current) X (Accel Time)

8. Program drive parameter 41 with the calculated value.
9. Restore drive parameters 11 (Motor RPM), 56 (Field Strength Speed), and 57 (Field Weaken Speed) to their correct values.
10. Restore speed parameters MAX SPEED, ACCEL RATE, and JERK RATE to their correct values.
11. When you are satisfied with the ride quality of the car, proceed to Section 8 for load weigher and pre-torque setup, if so equipped.

Drive Reference Information

Drive Faults

Drive faults are indicated on the display by an “F” followed by a 2 or 3 digit number. Example: “F910” (indicates a blown fuse).

There are two (2) error logs in the drive:

- Parameter #800 contains a list of the last 16 faults that occurred. This list is constantly updated, with the newest error overwriting the oldest in the list. The list is stored on NVRAM and is never cleared. It is a continuous list, constantly updated.
- Parameter #0 also contains a list of the last 16 faults that occurred. This list is also constantly updated, with the newest error overwriting the oldest in the list. However, this list can be cleared.

To view or clear this error list, do the following:

1. Use the arrow keys to scroll to Parameter #0.
2. Press “DATA/FCTN” key.
3. The first entry is “ALL.”
4. Press “ENT” to clear all the errors in the list.
5. Use arrow keys to scroll past the “ALL” entry to view the error list.
6. The first error after “ALL” is the latest error.
7. Press the “ENT” key to clear that particular error.
8. The end of the list will be indicated by “END”.

For a more complete description, refer to the Magnetek manual.

The following table lists drive faults and suggests corrective measures.

Table 4.1 DSD 412 Drive Faults and Corrective Measures

Fault #	Fault Name	Action
P.L.		Loss of 115VAC power to drive. Check fuses and AC input voltage at TB3-1 to TB3-7.
- - -		Open Amptrap fuse or fuses. Check fuses and AC connections at TB3.
Prot		Parameter values protected. Generally seen when changing EEPROMs. Drive must be initially powered up with NVRAM protect switch in the non-protected position.
F13	Illegal Instruction	Check power supply board, main control card, software and ribbon cables.
F14	Line 1010 Emulator	Check power supply board, main control card, software and ribbon cables.
F15	Line 1111 Emulator	Check power supply board, main control card, software and ribbon cables.
F16	Privilege Violation	Check power supply board, main control card, software and ribbon cables.
F17	Divide by Zero	Check power supply board, main control card, software and ribbon cables.
F21	Watchdog Timeout	Check power supply board, main control card, software and ribbon cables.
F22	Reserved Interrupt	Check power supply board, main control card, software and ribbon cables.
F23	Uninitialized Interrupt.	Check power supply board, main control card, software and ribbon cables.
F24	Trace Exception	Check power supply board, main control card, software and ribbon cables.

Table 4.1 DSD 412 Drive Faults and Corrective Measures

Fault #	Fault Name	Action
F26	Spurious Exception	Check power supply board, main control card, software and ribbon cables.
F97	Overspeed Trip	Car speed greater than demanded speed (poor tracking). Bad encoder. Fields too weak. Speed regulator improperly tuned. Speed command exceeds maximum value. Check speed reference signal to drive.
F98	Tach Loss	Excessive motor feedback versus tach feedback. If motor has high starting current, increase parameter 15, TACH SENSE.
F99	Tach Reverse Connection	Tach feedback opposite direction of motor rotation. Reverse motor rotation (swap F1 and F2) or encoder polarity (B, B-).
F100	Not a number	Check power supply board, main control card, software and ribbon cables.
F101	Math Overflow	Check power supply board, main control card, software and ribbon cables.
F102	Math Underflow	Check power supply board, main control card, software and ribbon cables.
F103	Floating point divide by zero	Check power supply board, main control card, software and ribbon cables.
F104	Sign error in speed regulator	Check power supply board, main control card, software and ribbon cables.
F112	Bad PCDU pointer	Check power supply board, main control card, software and ribbon cables.
F114	Locked up queues	Check power supply board, main control card, software and ribbon cables.
F115	Multiplexer config error	Check power supply board, main control card, software and ribbon cables.
F220	DCU ROM BUS error	Check power supply board, main control card, software and ribbon cables.
F221	DCU RAM BUS error	Check power supply board, main control card, software and ribbon cables.
F222	DCU NVRAM BUS error	Check power supply board, main control card, software and ribbon cables.
F223	DCU DPRAM BUS error	Check power supply board, main control card, software and ribbon cables.
F232	Unknown BUS error	Check power supply board, main control card, software and ribbon cables.
F240	DCU ROM BUS error	Check power supply board, main control card, software and ribbon cables.
F241	DCU RAM BUS error	Check power supply board, main control card, software and ribbon cables.
F242	DCU NVRAM add error	Check power supply board, main control card, software and ribbon cables.
F243	DCU DPRAM add error	Check power supply board, main control card, software and ribbon cables.
F252	Unknown address error	Check power supply board, main control card, software and ribbon cables.
F400	Motor overload	Timed excessive motor current. Check for brake not picking or other mechanical problem.
F401	Excessive field current	Drive detected too high motor field current. Generally caused by poor regulation on large field pieces. Perform a drive self-tune to ensure parameter 51 correct. Try increasing parameter 54. If problem persists, replace Field Card.
F402	Contactor Failure	Loop Contactor Auxiliary input to drive not turning off within 1 second of drive turning off LPR output.
F403	5 minutes full field	The full field command to the drive has been on longer than 5 minutes. Directional limits not set to open 1” beyond floor or car stalled.

Table 4.1 DSD 412 Drive Faults and Corrective Measures

Fault #	Fault Name	Action
F404	Open armature circuit fault	No drive to motor armature connection. Check F4 fuse or open wiring.
F405	Drive Safety circuit failure	Connection from TB3-1, TB3-6 not closed 100 ms before enabling Run or not opening 100 ms after disabling drive. Check SR and MB contacts to drive.
F406	10% low line	Incoming AC line 10% below value programmed at parameter 9.
F407	DCU CEMF Fault	Excessive CEMF. Check motor armature voltage and current while lifting full load. Adjust motor field to obtain correct values.
F408	PCU CEMF Fault	Excessive CEMF. Check motor armature voltage and current while lifting full load. Adjust motor field to obtain correct values.
F409	PCU loop fault	Check power supply board, main control card, software and ribbon cables.
F410	Speed error fault	Difference between desired and actual speed exceeds values programmed at parameters 99 and 100.
F411	Maximum resets attempted	If parameter 101 is set to ON, the drive has faulted more than 10 times in 1 hour.
F900	PCU loop fault	Drive enable signal turned on and safety line (TB3-1 to TB3-6) open or safety line closed while enable signal not turned on.
F901	PCU 1st fault	Motor armature current exceeds 250% of rated current. Short in motor armature wiring, bad SCR, or poorly tuned regulator.
F902	Power supply fault	Bad power supply card or shorted component drawing power supply low. Check +5, +24, and 15 volt supplies.
F903	Line sync fault	Noise on AC line. May also be caused when building switches from Emergency Power to Normal Power. If problem does not clear when drive is reset, replace Armature Interface PCB.
F904	Low line voltage	Power line low based on value programmed at parameter 9. Could be caused by open fuse.
F905	Field loss fault	Loss of or low field current. If field resistance is correct, generally caused by poor regulation on large field pieces or incorrect phasing of field AC supply. Perform a drive self-tune to ensure that parameter 51 is correct. Try increasing parameter 54. If problem persists, replace Field Card.
F906	DCU fault	Check power supply board, main control card, software and ribbon cables.
F907	Thermistor fault	Open thermistor on heat sink. Also, heat sink temperature too high.
F908	Over temperature fault	Ambient temperature in drive too high. Check fans and verify proper airflow in drive.
F909	Excessive ripple fault	Noise on AC line. May also be caused when building switches from Emergency Power to Normal Power. If problem does not clear when drive is reset, replace Armature Interface PCB.
F910	Blown fuse fault	Open Amptrap fuse or fuses. Check fuses and AC connections at TB3. Check for loose connections from fuses to SCR bridge.
F911	Shorted SCR/Doubler	Generally detect during 998, PCU Diagnostics. Bad SCR or doubler pack.
F912	Open SCR	Generally detect during 998, PCU Diagnostics. Bad SCR or doubler pack.
F915	Parameter set up fault	Incorrect parameter settings. Check parameters 3, 7, 9, 50, and 52 values.
F917	Reverse armature voltage connection	Polarity of armature voltage feedback reversed. Swap armature + and - wires at TB5 on Armature Interface PCB. If problem persists, replace Armature Interface PCB.

Table 4.1 DSD 412 Drive Faults and Corrective Measures

Fault #	Fault Name	Action
F919	Rated line voltage setting error	Incorrect parameter settings. Check parameter 9.
F920	Load voltage setting error	Incorrect parameter settings. Check parameter 7.
F921	Bridge rating fault	Measured value of Armature Interface board resistor R5 not correct. Indicates incompatible hardware or connector J14 missing or unplugged. Also could be caused by bad Armature Interface PCB or Main Control card.
F923	Armature current setting fault	Incorrect motor current parameter setting. Check parameter 3.
F924	Field current setting fault	Incorrect field parameter settings. Check parameters 49, 50, and 53.
F926	PCU watchdog fault	Check power supply board, main control card, software and ribbon cables.

Drive Parameters

The following is a comprehensive list of the parameters in the drive. Also included with the parameters is a description of what they control and the proper setting procedure. This list is based on Software Revision R6,9 (Chips U13 &U14) and R6,5 (U39 & U40).

Table 4.2 DSD 412 Drive Parameter Reference

#	Parameter Name	Units	Value	Description
0	Reset errors	None		Drive error list. Can be reset to display current errors.
1	Current Limit	% of Full Load Current	275	Percentage of full load current at parameter 3 that will cause the drive to trip on an over-current fault.
2	Use Self Tune	Logic	0	When set to 1, this parameter sets the drive to use the measured values from the self tune at parameters 613, 614, and 615 instead of the programmed values at parameters 4, 6, and 51. Typically set to 0.
3	Rated Armature Current	Amperes	From Motor Nameplate	Motor current rating.
4	Armature Resistance	Ohms	From Self Tune	Resistance value of the hoist motor armature. Derived from self-tune.
6	Armature Inductance	Milli Henries	From Self Tune	Inductance value of the hoist motor armature. Derived from self-tune.
7	Rated armature voltage	DC volts	From motor nameplate	Motor armature voltage rating.
8	Current regulator crossover	Radians	500	Current regulator bandwidth. Response increases as number increases.
9	Nominal AC Voltage	AC volts	Measured at L1, L2, and L3	Incoming AC voltage. Used to detect a low line fault.
10	Encoder PPR	Pulses per revolution	From encoder data	PPR value of encoder. Used to determine the speed at which the motor is turning.
11	Motor RPM	Revolutions per minute	From motor nameplate	RPM motor should be turning when car is running at rated speed.

Table 4.2 DSD 412 Drive Parameter Reference

#	Parameter Name	Units	Value	Description
12	Overspeed	Percentage of rated speed	110	Sets point at which drive trips on an overspeed fault.
14	Voltage sense	Percentage of Arm Voltage	25	Sets minimum voltage level at which tach loss and tach reverse connection faults are detected.
15	Tach sense	Percentage of tach feedback	5	Sets minimum level at which tach loss and tach reverse connection faults are detected.
16	Gearless ratio	None	Calculated	Used when the encoder is not driven directly from the motor shaft. Derived by the formula: Motor Sheave Diameter / Encoder Wheel Diameter
17	Rated Speed	Feet per minute	Rated speed of car	Car rated speed. Used to display the speed of the car and the speed command in FPM at addresses 600 and 602. Also, the drive will not allow the car to accelerate or decelerate at a value greater than parameter 21, as scaled by this parameter.
21	Maximum acceleration rate	Feet Per Second^2	6.5	Maximum allowable acceleration and deceleration rates.
22	Error list reset	Logic	OFF	Resets the errors in the error list.
32	Field sense	Percentage of full field	45	Sets the amount of full field current required before allowing the main contactor to pick.
40	Response	Radians	6.0	Controls speed regulator response. Larger numbers = greater response.
41	System inertia	Seconds	2.0	Tells the drive the moment of inertia of the system.
42	Stability	None	1.0	Modifies speed regulator response. Increasing this value compensates for poor adjustment of the System Inertia parameter.
49	Weak Field Current	Amperes		Amount of current applied to fields while car is running in weak field mode.
50	Full field current	Amperes	From motor data	Amount of current motor fields require during forcing conditions.
51	Field L/R	Seconds	From self tune	Measured during self-tune. Tells the drive how responsive the fields are to change in current for proper regulation.
52	Rated Field Voltage	Volts	From motor data	Rated voltage of motor fields.
53	Standing field current	Amperes	Typically 50% of Parameter 50	Amount of current motor fields require during standing conditions.
54	Field Response	Radians	5.0	Controls field regulator response. Larger numbers = greater response.
55	Field Volts AC	AC volts	0	AC input voltage to the motor field supply.
56	Field strengthening speed	Percentage of rated speed		Controls the point at which field current will be increased from weakened to full field value.

Table 4.2 DSD 412 Drive Parameter Reference

#	Parameter Name	Units	Value	Description
57	Field weakening speed	Percentage of rated speed		Controls the point at which field current will be decreased from full field to weakened value.
58	Field strengthen rate	Seconds	2.0	Controls the amount of time it takes for field current to be increased from weakened to full field value.
59	Field Weaken Rate	Seconds	2.0	Controls the amount of time it takes for field current to be decreased from full field to weakened value.
63	Up/Down Bit Pick Up	Percentage of rated speed	0.01	Controls the threshold at which the drive turns on the internal bit for up or down motor rotation.
80	Overspeed test	Logic	OFF	Activates an overspeed multiplier of the speed command. Can be used to overspeed the drive for testing purposes.
81	Overspeed multiplier	None	1.0	Multiplies the speed command for overspeeding the drive. Can be used to overspeed the drive for testing purposes.
82	Reference multiplier	None	1.000	Multiplies the speed command. Not used on IntellaNet systems.
83	Motor overload time out	Seconds	90	Sets the time component of the motor overload trip curve.
84	Motor overload level	None	1	Sets the current level of the motor overload curve.
85	Current decay ramp	Seconds	0.2	Sets the amount of time it takes to ramp to zero current after stopping the drive.
86	LPR delay time	Seconds	0.3	Allows relay LPR to remain picked until current decays.
87	Pretorque multiplier	None	1.00	Multiplies the pretorque command. Not used on IntellaNet control systems.
95	Analog Output 0	Logic	0	Selects analog output to monitor at TB1-45. A value of 0 sets the output to the Speed Reference signal.
96	Analog Output 1	Logic	0	Selects analog output to monitor at TB1-44. A value of 0 sets the output to the Speed Feedback signal.
97	Test Point 0 multiplier	None	0.7	Allows the magnitude of the analog output at TB1-45 to be modified. A value of 0.7 sets the output to be equal to the +/- 7-volt signal given the drive.
98	Test Point 1 multiplier	None	0.7	Allows the magnitude of the analog output at TB1-44 to be modified. A value of 0.7 sets the output to be equal to the +/- speed reference given the drive.
99	Speed error time	Seconds	0.8	Sets the amount of time the speed command will be allowed to vary from speed feedback before the drive trips on a Speed Error fault.
100	Speed Error Limit	Percentage of rated speed	20.0	Sets the magnitude the speed command will be allowed to vary from speed feedback before the drive trips on a Speed Error fault.
101	Auto fault on	Logic	OFF	Allows the drive to self reset any faults. Set to OFF for IntellaNet controls.

Table 4.2 DSD 412 Drive Parameter Reference

#	Parameter Name	Units	Value	Description
102	3 second loop fault	Logic	1	Sets the time for the Loop Pickup Fault to occur. 0=400Msec. 1 = 3 seconds.
104	1 Serial Gain Switch	Logic	0	Determines the source of the Gain Reduce function at parameter 108. If set to 0, it is determined by parameter 105, Gain Switch Speed.
105	Gain switch speed	Percentage of rated speed	1.0	When parameter 104 is set to 0, this parameter determines at what speed the Gain Reduce function at parameter 108 occurs.
107	Tach rate gain	None	0.0	Sets gain of tach rate circuit. Should be set to 0, but can be activated if vibration occurs which cannot be tuned out any other way. If activated, should be kept as low as possible because it will affect system tracking. Contact MCE before activating.
108	Gain reduce	None	1.00	If activated, sets amount of gain reduction. Used as an adaptive gain feature to reduce the amount of speed loop gain at higher speeds to eliminate vibration.
110	Multi-step enable	Logic	OFF	Enables the drive internal S-curve functions.
150 - 164	Not used			
190	Analog speed reference zero	Percentage of rated speed	0.00	Allows the analog speed command to be adjusted to remove any offset when zero speed is demanded. Not used on IntellaNet controllers with a serial drive interface.

Display Parameters

The following parameters are used to display drive data. They can be useful during troubleshooting to determine what signals the drive is seeing and the magnitude of the signals. They also allow the drive to be tuned without connecting a meter or amp probe to the controller.

Table 4.3 DSD-412 Display Parameters

#	Name	Description
600	Car speed	Displays the present speed of the car. Derived from parameter 17. Rated Speed based on the speed of the motor. It is not an exact value but rather the value that the drive thinks the car is moving at.
601	Motor RPM	Displays the present speed of the motor in RPM. It is exact only if parameter 16, Gearless Ratio and parameter 10, Encoder PPR are correctly set.
602	Speed Reference	Displays the speed reference signal in feet per minute to the drive.
603	Pretorque reference	Displays the magnitude of the pretorque reference signal to the drive.
609	Counter EMF	Displays the amount of counter EMF of the motor armature.
610	Motor Armature Voltage	Displays the present motor armature voltage.
611	Motor Armature Current	Displays the present motor armature current in amperes.
612	Motor Field Current	Displays the present amount of motor field current.
613	Measured motor resistance	Displays the measured motor armature resistance. Measured during the self-tune.
614	Measured motor inductance	Displays the measured motor armature inductance. Measured during the self-tune.
615	Measured motor field time constant	Displays the measured motor field time constant. Measured during the self-tune.
616	Speed error	Displays the amount of speed error the drive is seeing.
617	Line frequency	Displays the observed frequency of the AC line in Hertz.
618	Heat sink temperature	Displays the observed temperature of the heat sink assembly in degrees C.
619	AC Line Voltage	Displays the present voltage of the AC line.
688	Cube ID	Displays the identification of the drive power cube. Refer to the Magnetek manual.
689	Field current range	Displays the present value of the field module SW1 current range DIP switch. 1=1.9A. 3=16.0A. 6=6.9A. 8=40.0A.
690	U13/U15 part number	Displays the last three digits of the part number of the U13/U15 chips on the control card.
691	PCU release	Displays the release of the drive PCU (Parameter Control Unit).
698	Software version	Displays the drive software version.

Magnetek HPV 900

In This Section

This section contains startup and adjustment instructions for IntellaNet systems using the Magnetek HPV 900 drive.

Before starting this procedure:

- Read Section 1 on Personal and Equipment Safety completely.
- Read Section 2 on Piping & Wiring completely.
- Read this section completely.

5

Danger

Elevator control products must be installed by experienced field personnel. This manual does not address code requirements. The field personnel must know all the rules and regulations pertaining to the safe installation and running of elevators.

Controller Power Up

Danger

Perform the following procedures with controller power off. Do not apply power to the controller until instructed to do so.

1. Refer to sheet 3 of the wiring diagrams. At the top of the page you will see the main line disconnect voltage. Verify that the main line voltage listed on the wiring diagrams matches that which is supplied by the building. If not, contact MCE Technical Support before proceeding.
2. Refer to Figure 5.1. Use an ohmmeter to check for continuity between relay board terminals GOV1 and STP (safety circuit). If there is no continuity refer to sheet 4 of the wiring diagrams and troubleshoot for the open.
3. With the meter on terminals GOV1 and STP, open each device in the safety circuit one at a time and confirm that each device will open the safety circuit if actuated.

Figure 5.1 Safety Circuit and Locks

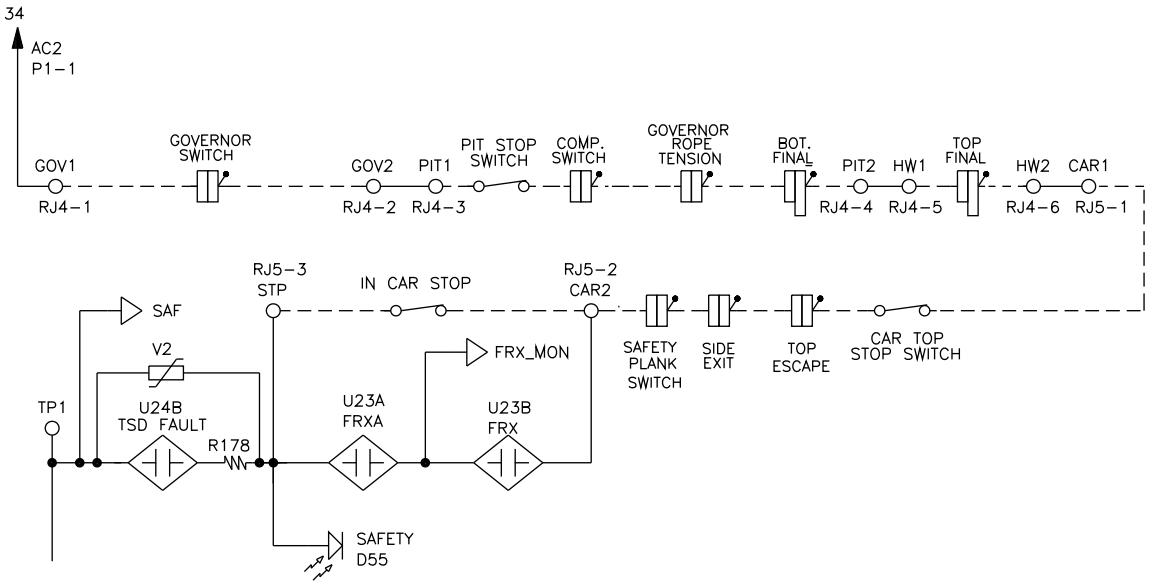

4. Open the governor switch.

5. Refer to Figure 5.2. Check for continuity between relay board terminals G1 and G2 (car gate switch). If there is no continuity refer to sheet 4 of the wiring diagrams and troubleshoot for the open.
6. With the meter still on terminals G1 and G2, open the gate switch on the car and confirm that opening the switch opens the car gate circuit.

Figure 5.2 Relay Board Terminals G1 and G2 (Car Gate Switch)

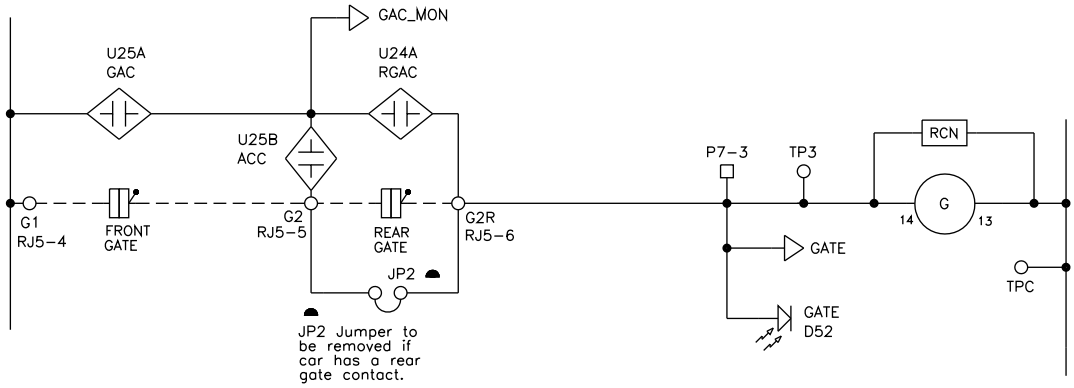

7. If there is no rear door on the car, go to step 10. If there is a rear door, go to step 8.
8. Check for continuity between relay board terminals G2 and G2R (rear car gate switch). If there is no continuity, refer to sheet 4 of the wiring diagrams and troubleshoot for the open.
9. With the meter still on terminals G2 and G2R, open the rear gate switch on the car and confirm that opening the switch opens the rear car gate circuit.
10. If there is no rear door on the car, install a permanent jumper between relay board terminals G2 and G2R.
11. Refer to Figure 5.3. Check for continuity between relay board terminals L1 and L3A (door locks). If there is no continuity refer to sheet 4 of the wiring diagrams and troubleshoot for the open.

Figure 5.3 Relay Board Terminals L1 and L3A (Door Locks)

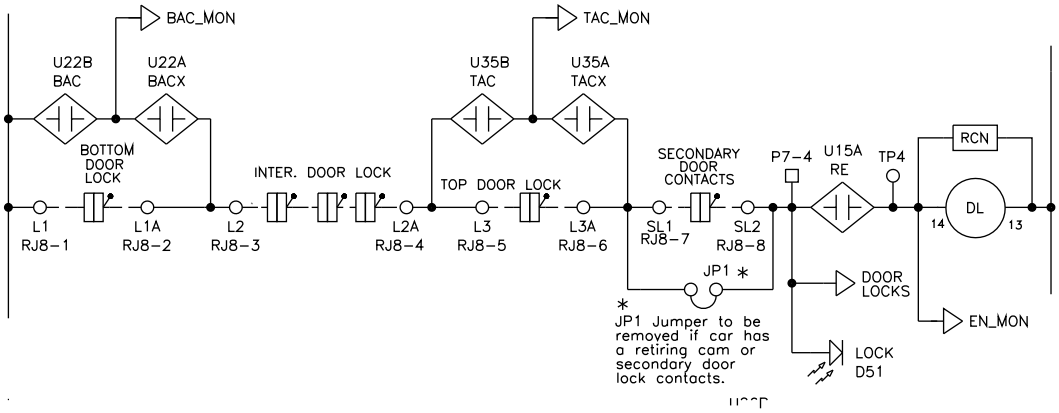

5

12. With the meter still on terminals L1 and L3A, verify that opening any door lock will open the circuit. Test all locks. Confirm that the lock circuit is opened by any lock.
13. If this car has seismic service, go to step 14. If not, go to step 18.
14. Refer to sheet 5 of the wiring diagrams and Figure 5.4 below. Place an ohmmeter from relay board terminal AC2 to terminal CTOP. If the car top inspection switch is in the automatic position, there should be continuity. If not, check the switch and the wiring and correct as necessary.

Figure 5.4 Relay Board Terminals AC2 to CTOP

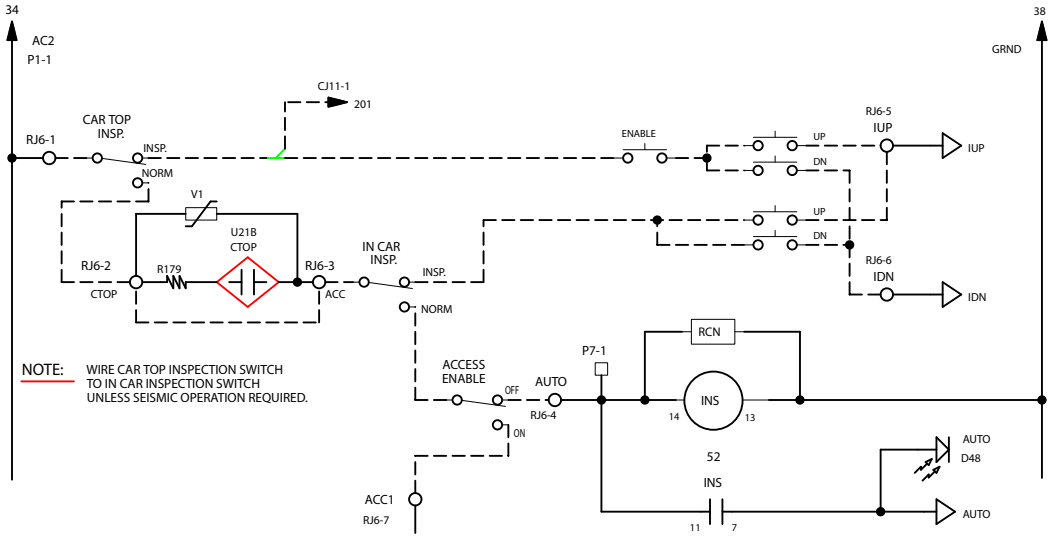

15. Confirm that placing the switch in the inspection position opens the circuit. Place the switch in the automatic position for initial power up.
16. Place an ohmmeter from relay board terminal ACC to terminal AUTO. If the in-car inspection switch is in the automatic position, there should be continuity. If not, check the switch and the wiring and correct as necessary.
17. Confirm that placing the switch in the inspection position opens the circuit. Place the switch in the automatic position for initial power up.
18. Refer to sheet 5 of the wiring diagrams and Figure 5.4. Connect an ohmmeter between relay board terminals AC2 and AUTO. If the car top inspection switch and the in-car inspection switches are in the automatic position, there should be continuity. If not, check switches and wiring and correct as necessary.
19. Confirm that placing either switch in the inspection position opens the circuit. Place both switches in the automatic position for initial power up.
20. Refer to sheet 5, line 55 of the wiring diagrams. Check continuity between relay board terminals UN1 and UN2 (up normal limit). Confirm that the switch is closed when the car is away from the top floor. It must be set to open 1” below the top floor and stay open through the entire stroke of the buffer.
21. Refer to sheet 5, line 55 of the wiring diagrams. Check continuity between relay board terminals DN1 and DN2 (down normal limit). Confirm that the switch is closed when the car is away from the bottom floor. It must be set to open 1” above the bottom floor and stay open through the entire stroke of the buffer.

22. Place the inspection switch on the relay board in the down, or INSP position.
23. Place the Door Disable switch in the down, or disable position.

Danger

Have someone stand by the disconnect switch the first time power is applied to the controller. If the car starts to move or a dangerous condition is noted, immediately remove power.

24. Apply power to the controller.

Danger

The controller now has power applied. Some of the following procedures are performed with power on. Use extreme caution and observe all safety precautions.

25. While the controller is powering up, a message on the display card prompts you to press "1" to alter parameters. Press "1" on the keypad to access parameter menus at this time.
26. On the display card keypad, press the "#" key until the cursor (the flashing square) is in front of the menu item Miscellaneous Parameters. Press the "0" key.
27. Select Inspection Speed. Set to 045 fpm.
28. Move the cursor down to Main Contactor Hold Time. Set it to "10" (1 second).

Note

If the hoist motor brake is sluggish, set Main Contactor Hold Time to a larger value. This parameter controls how long the drive stays enabled after a stop is demanded. Setting it too low will cause the car to roll before the brake sets fully on stop.

29. Select Return and press the "0" key to return to the main menu.
30. Select Motion Parameters. Set Max Speed to the contract speed of the car.
31. Return to the main menu. Select the Terminal Slowdowns menu.
32. Select Press Enter to Disable Limit Section, press "0." A message will warn "Limit Section of Relay Card Disabled! Section is Disabled Until Relearned!" Press any key on the keypad to return to the previous sub-menu.
33. Select Return to Main Menu. Press the "0" key.
34. Select Write Values to Non Volatile Memory. Press the "0" key.
35. A dialog will ask if you are sure you want to save the values. With the cursor in front of Yes, press "0."
36. A message will confirm that the values have been saved. Press the reset button (S1) on the MPU to exit the menus.
37. While powering up, the MPU establishes communications with the Car Top Encoder and the Car Station. If they are not connected, the following message will appear:

    "Incompatible LON Software or Car Station Communication Failure. Place Car on Inspection and then Press 2 for Inspection Operation Only."

38. Make sure the inspection switch on the relay board is set to INSP. Press the "2" key on the keypad. The diagnostic screen will appear.

Relay Board initial setup is complete. The drive must now be programmed.

Drive Programming

Use the Magnetek factory manual as a reference but follow the start up and adjusting procedures here.

The drive has been modified to meet MCE specifications. If drive replacement is ever required contact MCE Technical Support. MCE will not accept any drive for repair under warranty without a Return Material Authorization (RMA) number issued by Technical Support.

Once the controller has been powered up, the drive must be programmed to interface correctly with the equipment on the job site. The MCE Testing Department has pre-programmed the drive based on the information provided to us in the survey, but it is important to confirm ALL parameters before attempting to run the car.

The drive may fault on initial power up due to incorrect parameters. This is normal, and may be ignored at this time.

1. Verify that the voltage on the motor nameplate matches the voltage input to the drive. If not, contact MCE Technical Support before proceeding.
2. Confirm that the three leads from the controller to the motor are connected. If there are more than three leads coming out of the motor, make sure that the motor is wired in a 'wye' configuration with correct field rotation, or follow the motor manufacturer recommendation.
3. Confirm that the encoder is connected correctly. Refer to the wiring diagrams for proper hook up.
4. Locate the test sheets that were shipped with the controller. These sheets have the drive parameters calculated for your installation.

Drive Parameters

Before attempting to run the drive, verify that the parameters in the drive match those on the Test sheets. For information on using the programming unit please refer to the Magnetek HPV 900 manual.

The following parameters must be checked to confirm that they are set correctly for your application. Please note that many parameters are not listed, as their default values will not need to be modified or they are not used in this application.

1. Access the ADJUST A0 menu on the drive. Go to the sub menu, DRIVE A1.
2. The first parameter, CONTRACT CAR SPD, is the rated contract speed of the car. Set to the rated car speed in feet per minute.
3. Set CONTRACT MTR SPD to the motor RPM which will make the car run at contract speed. This is not the data from the motor nameplate. It programs the speed at which the drive will run the motor when the car is at contract speed.
4. ENCODER PULSES to the PPR (Pulses Per Revolution) of the encoder.
5. Set SPD COMMAND MULT (speed reference multiplier) to 1.00.
6. Set PRETORQUE MULT (magnitude of the pretorque reference) to 1.00.
7. Go to the ADJUST A0 menu. Access the POWER CONVERT A4 sub-menu.
8. Go to the INPUT L-L VOLTS parameter. This parameter tells the drive what the input line to line voltage is and is used by the drive to declare a low line voltage fault. Set to the nominal AC voltage at the drive input.

9. Go to the ADJUST A0 sub-menu MOTOR A5.
10. Go to the RATED MTR PWR parameter. This parameter tells the drive how many horsepower or kilowatts the motor is rated for. Set to the value on the motor nameplate.
11. Go to the RATED MTR VOLTS parameter. This parameter tells the drive how many volts the motor is rated for. Set to the value from the motor nameplate.
12. Go to the RATED EXCIT FREQ parameter. This parameter tells the drive the frequency at which the motor is excited to obtain motor nameplate rated RPM. Typically this is 60 Hz. Set to the value from the motor nameplate or the manufacturer data sheet.
13. Go to the RATED MOTOR CURR parameter (current required by the motor to obtain rated power at rated speed). Set to the value from the motor nameplate.
14. Go to the MOTOR POLES parameter (number of motor poles). To obtain this value, determine the motor speed at the rated excitation frequency without any slip (120 / Rated Frequency = No Slip Motor RPM).

If you cannot determine the motor speed with zero slip, use the motor nameplate RPM in the formula. Round the number up to the nearest even whole number to determine motor poles.

Note

This value must be an even number or a Setup Fault will occur.

15. Go to the RATED MTR SPEED parameter. This parameter tells the drive what speed the motor should be turning when it is excited at its rated frequency and producing rated power. Set this parameter to the value from the motor nameplate or the manufacturer data. If this value is not available temporarily set it for the value calculated by the following formula: (No Slip Motor RPM) / 0.98
The final setting can be calculated by the drive by performing an adaptive tune.

Note

This value must be less than 900 RPM on 8 pole motors, 1200 RPM on 6 pole motors, and 1800 RPM on 4 pole motors or a drive set up fault will occur.

16. Go to the % NO LOAD CURR parameter (current required to turn the motor at rated speed with no load). This can be determined from the motor manufacturer data sheets. If data is not available, temporarily set to 60% of the full load current on the motor nameplate. The final setting can be calculated by the drive during adaptive tuning.

Brake Adjustment

Danger

The brake assembly and all pins should be cleaned thoroughly and all spring tension set properly to hold 125% of car capacity prior to adjusting the brake driver. Brake shoes should be checked to insure at least 95% surface contact. If spring tensions are changed after this adjustment, the brake driver will need to be re-adjusted.

1. Refer to Figure 5.5. Verify that the brake coil is connected properly to the controller.
2. Connect a meter across the F- and F+ terminals of the brake driver. Set the meter range high enough to measure the brake lifting voltage level for the job.
3. With no inputs on at the J1 terminal of the brake driver, the V/I-4 pot will be selected. Adjust the V/I-4 pot fully counterclockwise.
4. Turn the ACC1 pot fully clockwise. This will allow for a rapid response of the brake regulator from a lower voltage level to a higher voltage level.
5. Turn the DEC1 pot fully clockwise. This will allow for a rapid response of the brake regulator from a higher voltage level to a lower voltage level. This will also help prevent excessive arcing on the contacts of the BK relay.
6. Turn the main line power OFF. TEMPORARILY place a jumper from J1-1 on the brake driver to AC2 on the controller terminal block.
7. Turn the main line power ON. Adjust the V/I-1 pot until brake pick voltage required for the job is obtained.
8. Turn the main line power OFF. Remove the jumper from terminal J1-1 on the brake driver the brake driver and place it a J1-2.
9. Turn the main line power ON. The LED over the V/I-2 pot will be illuminated. Adjust the V/I-2 pot until approximately 60% brake lifting voltage is obtained, or if available, the recommended brake holding voltage from the manufacturer.
10. Turn the main line power OFF. Remove the jumper from terminal J1-2 on the brake driver the brake driver and place it a J1-3.
11. Turn the main line power ON. The LED over the V/I-3 pot will be illuminated. Adjust the V/I-3 pot until approximately 40% brake lifting voltage is obtained, or if available, the recommended brake re-level voltage from the manufacturer.
12. Remove the jumper from J1-3 to AC2. Preliminary brake driver setup is complete.

Figure 5.5 Garvac Brake Control

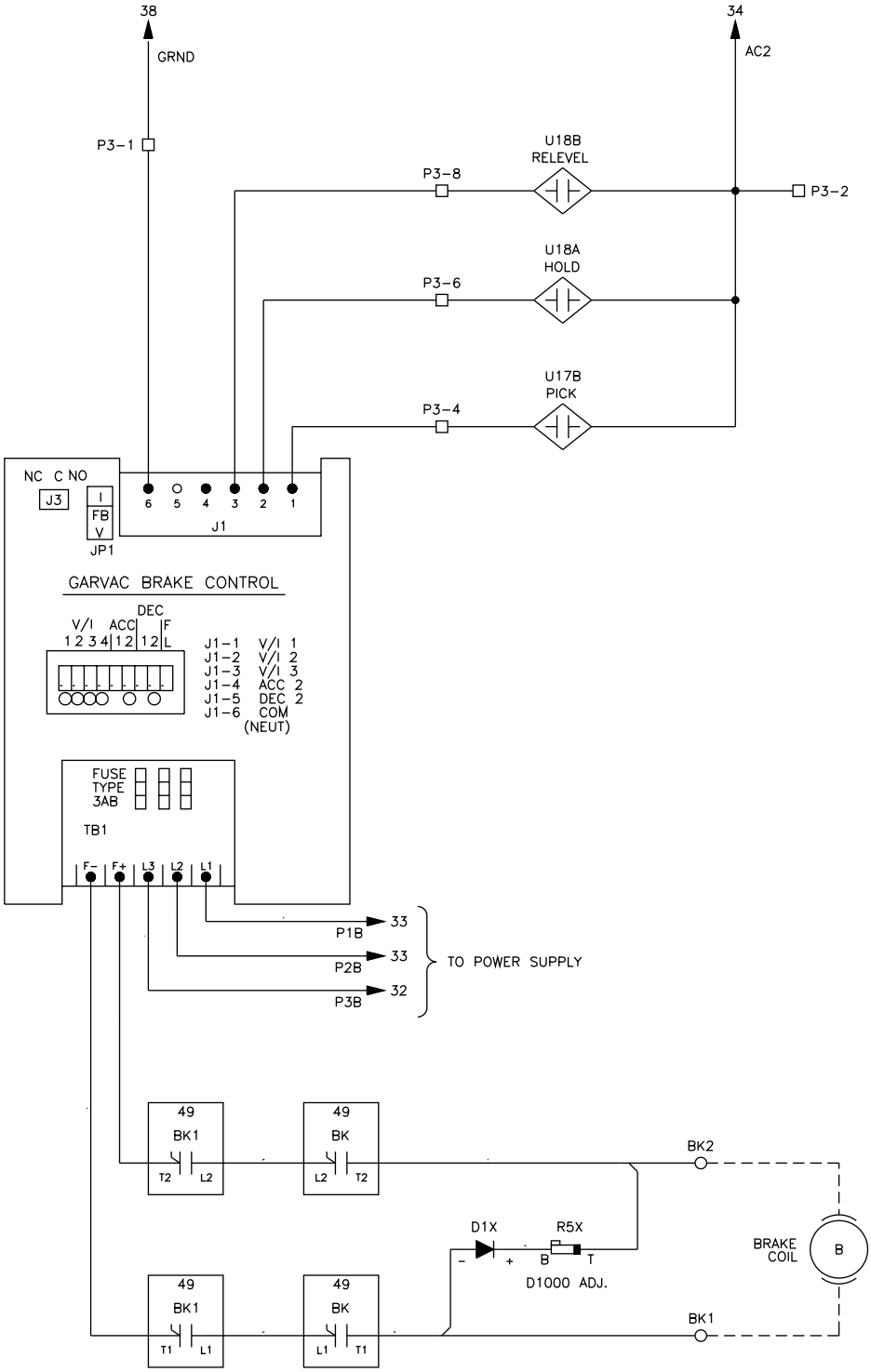

Run the Car

Danger

Have someone standing by the main line disconnect during this procedure in case the car starts to move uncontrollably. If it does, immediately open the disconnect switch.

1. Confirm that controller inspection and door disable switches are both in the down position.
2. Unplug the 'DE' relay from the controller.
3. LED D55 on the relay board should light and the 'G' relay on the relay board should energize. If not, refer to sheet 4, line 43 of the wiring diagrams to determine why.
4. Attempt to run the car using the inspection switch on the relay board. While holding the toggle up or down, confirm that the 'DL' relay on the relay board energizes. If not, refer to sheet 4, line 45 of the wiring diagrams to determine if the door locks are open.
5. After the 'DL' relay energizes, the 'SR' relay should pick. If not, refer to sheet 4, line 47 of the wiring diagrams to determine why.
6. Release the inspection switch. Plug in the 'DE' relay.
7. Attempt to run the car up using the inspection switch. Hold the switch up until the car starts to move. If the motor moves in the opposite direction, stop the car. Using the programmer, access the Configure C0 menu. Go to User Switches C1 and change Motor Rotation from Forward to Reverse.
8. Using the programmer, access the Display D1 menu. Monitor Speed Reference. Run the car in the down direction. The speed reference displayed on the drive should be negative. Using the inspection switch, run the car in the up direction. The speed reference should be positive. If these values are reversed, the speed reference signal to the drive at TB1-28 to TB1-27 is reversed. Stop the car and correct if necessary.
9. Monitor Speed Feedback in the Display D1 menu. Run the car in the down direction. Speed feedback should be negative. If not, reverse the A and A- signals from the encoder to the drive.
10. Use the inspection switch to run the car. Use a hand tach to check car speed. It should be moving at approximately the same speed as that displayed on the drive. If not, access the Adjust A0 menu. Access User Switches A1. Adjust Contract Motor Spd until the car is running at the same speed as displayed by Speed Reference.
11. Monitor the brake while running the car to ensure it is operating correctly. If necessary, refer to the preceding brake adjust instructions.
12. Run the car again and confirm that the car runs correctly in both directions. If vibration is observed in the motor, especially during acceleration and deceleration, decrease the value of the Response parameter in the User Switches A1 menu until the vibration is gone.

The controller is now set up for inspection operation. When you are ready to perform the high-speed adjustment procedure, go to the next topic.

Drive Faults

If a fault occurs in the drive, the Fault LED on the front panel of the drive will light. The MPU will reset the drive as long as the RESET / NON RESET switch on the relay board is in the up, or RESET position.

To access the drive faults, using the hand held programmer, go to the FAULTS F0 menu. This menu has two sub-menus, ACTIVE FAULTS F1 and FAULT HISTORY F2. Use the arrow keys to access the desired menu. If the drive is faulted, ACTIVE FAULTS will display the present fault. FAULT HISTORY will display faults that have occurred.

Please refer to “HPV 900 Drive Faults” on page 5-26 for a complete list of drive faults.

High Speed Adjustment - Magnetek HPV 900

Hoistway Set Up

Caution

Before proceeding with high-speed adjustment, the hoistway switches must be set up properly. Access the top of the car and confirm that:

- The bottom final limit is set to open 6” below the bottom floor.
- The bottom directional limit is set to open 1” above the bottom floor. When the car is sitting floor level at the bottom floor, the limit switch must be open.
- The top directional limit is set to open 1” below the top floor. When the car is sitting floor level at the top floor, the limit switch must be open.
- The top final limit is set to open 6” above the top floor.
- If the car has hoistway access, two additional limit switches are installed in the hoistway. The first is the bottom access zone switch. This switch must be set such that it is closed while the car is floor level at the bottom access floor. It must remain closed until the bottom of the toe guard is level with the top of the hoistway entrance.
- The top access zone switch must be set such that it will be closed while the car is floor level at the top access floor. It must remain closed until the top of the car is level with the sill of the hoistway entrance.

MPU Initial Set Up

1. Press the MPU reset (S1) switch. While the MPU is powering up, a message will be displayed prompting you to press 1 if you want to alter the parameters. Press the 1 key at this time.
2. Refer to Section 9, go through all of the parameter screens. Set all parameters applicable to the job configuration.

Note

Pay no attention to the FLOOR LANDING VALUES at this time. These numbers will mean nothing until a learn trip is completed.

3. Set Maximum Allowed Speed Differential to contract speed. This value will be adjusted later after completing terminal slowdown adjustments.
4. Save values to MPU Non-Volatile memory.
5. Press the reset (S1) switch on the MPU.
6. Allow the MPU to power up. If communication has been established with the Car Station board and the Car Top Encoder, the diagnostic screen will be displayed. If communication is not established, the following message will be displayed:

   Incompatible LON Software or Car Station Communication Failure. Place Car on Inspection and then Press 2 for Inspection Operation Only.

If this message is displayed, check for power to the Car Station board and check the LON communication network at MPU J1 and Car Station J8.

7. If the MPU cannot establish communication with the Car Top Encoder board the following message will be displayed: “Encoder Communication Failure.”
8. If this message is displayed, check for power to the Car Top Encoder board and check the LON communication network at MPU J1 and Car Top Encoder J8.

The MPU is programmed. Initial relay board setup is complete. A hoistway learn trip must now be performed.

Hoistway Learn

Preparation For Learn Trip

Verify encoder installation is complete:

- Tape and all door magnets installed.
- Stick mounted properly; stick cable connected to encoder electronics box.
- U4 terminal limit wired to encoder processor J3-6. D4 terminal limit wired to J3-1.
- IP & IPX from the controller wired to AJ2-1 & J2-4 on the encoder power supply board.
- IP wire from the controller wired to J3-2 and J3-5 on the encoder processor board.
- Shielded pair communication cable from MPU connected to encoder board J4. Cable shield taped off at encoder end.
- Shielded pair communication cable to Car Station connected to J4 on the encoder and J10 on the Car Station board. Cable shield taped off at Car Station.

Performing the Learn Trip

1. Make sure the controller inspection switch is in the down, or INSP position.
2. Move the car level with the bottom floor. Place both car top and in-car inspection switches in the normal position. The learn trip will not initiate unless the car is on automatic operation.
3. Confirm that DOL, EE, and SE inputs are off. The learn trip will not initiate if these inputs are not correct.

Note

If the DCL and DOL inputs are reversed (DOL on and DCL off) and the doors are closed, the parameter DCL/DOL Closed At Limits is not set correctly. Access the Door Parameters menu and change the value of the parameter. Be sure to save the change to non-volatile memory.

4. Open the main line disconnect and leave it open for at least one minute to ensure that any latched fault on the encoder will be cleared before the learn trip is initiated.
5. Close the main line disconnect. While the controller is powering up, press the “1” key on the display card to access parameter menus.
6. Switch the relay board inspection switch to the up or NORM position.
7. On the main menu screen, select Pretorque, Learn Trip and press the “0” key to access the sub-menu.
8. Select Press Enter for Learn trip. Press the “0” key.
9. The car will start the learn trip and move up the hoistway at about 24 fpm. It should stop as soon as it reaches the top floor door zone magnet. After reaching the top, the Display Card will flash “Learn Trip Completed Successfully.” The encoder card non-volatile memory has stored the positions of the magnets in the shaft.
10. The floor values must now be sent from encoder non-volatile memory to the MPU. Go to the Floor Landing Values screen. Select Press Enter for Floor Landing Values from the Encoder. Press “0” to send values to the MPU board.
11. Learn trip values will not take effect until stored to MPU nonvolatile memory. Select Return to Menu. Press “0.”
12. Select Write Values to Non Volatile Memory. Press the “0” key.

13. A dialog will ask if you are sure you want to save the values. With the cursor in front of Yes, press “0.”
14. A message will confirm that values have been saved. Open the main line disconnect and leave it off for at least one minute.

Hoistway learn is complete.

Preliminary Adjustments

1. Place the car in the center of the hoistway. Mark the cables with chalk when the car crosshead and the counterweight crosshead are exactly adjacent to each other.
2. If the controller is not set up for seismic operation, go to step 5.
3. On the monitor, observe the encoder position on the diagnostic screen. Write this value down.
4. Access the car parameters menu. Open the VIP, Medical, Earthquake menu. Program the encoder position recorded in step 3 into the Counterweight Zone parameter. Save to nonvolatile memory.
5. Move the car to a convenient floor. Place 40% of rated capacity in the car.
6. On inspection, run the car so it about 10 feet above the center of the hoistway.
7. Place an Amprobe on one of the leads to the hoist motor.
8. While observing the display on the Amprobe, run the car down through the center of the hoistway. Write down the amperage displayed when the car passes by the chalk mark on the cables. The value may vary slightly. (Make a few passes and average if needed.)
9. Place the car about 10 feet below the center of the hoistway.
10. While observing the display on the Amprobe, run the car up through the center of the hoistway. Write down the amperage displayed when the car passes by the chalk mark on the cables. The value may vary slightly. (Make a few passes and average if needed.)
11. Ignoring whether the recorded values were positive or negative, if the value recorded while the car was running up was greater than the value running down, the car is too heavy. Remove 100 pounds of weight from the car and repeat steps 8 through 10 until the recorded values are equal, but of opposite polarity.
12. Ignoring whether the recorded values were positive or negative, if the value recorded while the car was running down was greater than the value running up, the car is too light. Add 100 pounds of weight from the car and repeat steps 8 through 10 until the recorded values are equal, but of opposite polarity.
13. When the values are equal, but of opposite polarity, the car is balanced. Check how much weight is in the car. It should be between 40 and 50% of rated capacity. If not, the counterweight needs to be adjusted. If the car is too heavy, weight needs to be added to the counterweight to get the car balanced between 40 and 50% of rated capacity. If the car is too light, weight needs to be removed from the counterweight to get it balanced between 40 and 50% of rated capacity.
14. If adjustments are made to the counterweight, repeat steps 10 through 12 until balanced load is in the car. Leave the weights in the car at this time.

High Speed Adjustment

One Floor Up & Down

Using the controller keypad, make a one floor run up and a one floor run down in the middle of the hoistway. Refer to Section 9. Adjust motion parameters to achieve the desired ride. Check for the same speed both up and down.

Note

Stay away from the terminal floors.

Two Floor Up & Down

Using the controller keypad, make a two floor run up and a two floor run down in the middle of the hoistway. Refer to Section 9. Adjust motion parameters to achieve the desired ride. Check for the same speed both up and down.

Note

Stay away from the terminal floors.

Multi-Floor Up & Down

Using the keypad, make a multi-floor run up and a multi-floor run down in the middle of the hoistway. Refer to Section 9. Adjust motion parameters to achieve the desired ride. Continue making multi-floor runs until the system demands contract speed

Note

Stay away from the terminal floors.

The actual speed of the car may not reach contract speed. Do not change any parameters to make the car go contract speed. This will be adjusted next.

High Speed Adjustment - Magnetek HPV 900

Observe the controller diagnostic screen. Make a high speed run up and down in the middle of the hoistway. Set the RATED MTR SPEED parameter under the ADJUST A0, MOTOR A5 menu to achieve contract speed.

The car should now be running at contract speed. Some minor modifications may be necessary to obtain the best ride. If an adaptive tune is required, it must be performed at this time.

HPV 900 Adaptive Tune

If the motor to which the drive is connected is an old motor and no data is available for it, an adaptive tune must be performed. The adaptive tune requires that the car run at contract speed and be capable of lifting full load.

1. Select the Default Motor option for the Motor ID parameter. This will load default values into the motor data parameters to prepare the drive for the adaptive tune.
2. Enter the following motor data into the drive:
   - Motor HP or kW from nameplate into RATED MTR POWER.
   - Motor AC voltage from nameplate into RATED MTR VOLTS.
   - Motor AC frequency (usually 60 cycles) into RATED EXIT FREQ.
   - Motor nameplate full load amps into RATED MTR CURR.
   - Number of motor poles into MOTOR POLES.
   - Motor RPM with full load at the correct frequency into RATED MTR SPEED.

Note

The Motor RPM value must be less than 900 for 8 pole motors, 1200 for 6 pole motors, and 1800 for 4 pole motors or a drive fault will occur. The motor nameplate may not be correct.

3. Place a balanced load into the car. Reduce the car speed to 70% of contract speed by setting the RATED MTR SPEED parameter under the ADJUST A0, MOTOR A5 menu to 70% of its present value.
4. Run the car from top to bottom and back. While the car is running, monitor the MOTOR TORQUE (found under DISPLAY, POWER DATA D2). The difference between the observed torque while the car is running up and the observed torque while the car is running down should be within 15%. If not, verify that the car is balanced correctly.

Note

If the car does not have compensation, the motor torque will vary depending on where in the hoistway the car is. Verify that the motor torque is between +15% as the car passes through the center of the hoistway.

5. Verify that the FLUX REFERENCE (found under DISPLAY, POWER DATA D2) is 100%. If not, reduce the car speed until it is.

6. With the car running from top to bottom and back, observe EST NO LOAD CURR (Display Menu B Power Data D2). Enter this estimated value into the parameter % NO LOAD CURR.
7. Repeat steps 5 and 6 until the value of the EST NO LOAD CURR and the % NO LOAD CURR are equal.
8. Verify that motor torque is still 15% and flux reference is still 100%. If not, adjust accordingly and readjust the %NO LOAD CURR as needed.
9. Increase car speed to 100% of contract speed. To do this, re-adjust MPU pot R25 so 7.00 volts is present at relay board terminals RJ20-7 (positive) to RJ20-7 (negative) when contract speed is demanded.
10. With balanced load still in the car, run the car from top to bottom and back. While the car is running, observe EST NO LOAD CURR (DISPLAY, POWER DATA D2). Compare this value to the value found under %NO LOAD CURR (Adjust Menu B Motor M5).
11. If the EST NO LOAD CURR value is 2% larger than the %NO LOAD CURR, increase FLUX SAT SLOPE 2 by 10%. If the EST NO LOAD CURR and %NO LOAD CURR values are within 2%, continue to step 12.
12. Repeat steps 10 and 11 until EST NO LOAD CURR and %NO LOAD CURR are within 2%.
13. Place full load in the car. Run the car at contract speed from top to bottom and back.
14. Observe EST RATED RPM (DISPLAY, POWER DATA D2).
15. Enter this value into RATED MTR SPEED (ADJUST A0, MOTOR M5).
16. Remove full load from the car and place balanced load in it. Run the car from bottom to top and back.
17. Observe EST INERTIA (DISPLAY, ELEVATOR DATA D1). Write down the value for up and down.
18. Average the up and down values of EST INERTIA. Enter this value into INERTIA (ADJUST A0, DRIVE A1).
19. The controller is now set up for high-speed operation. Go to Section 7 and perform terminal slowdown setup. Please refer to “Ride Quality Adjustments” on page 5-18 after terminal slowdown setup.

Ride Quality Adjustments

1. If an Adaptive Tune was not required, it is now necessary to determine the system inertia. Access the EST INERTIA parameter in the drive (Display Menu B Elevator Data D1). If the Adaptive Tune was performed, go to step 4.
2. With balanced load still in the car, make a high speed run up and down. Average the up and down values of EST INERTIA.
3. Enter the value calculated in the previous step into INERTIA (ADJUST A0, DRIVE A1).
4. Ride the car up and down, staying away from the terminal floors. Observe the ride. There should be no vibration at any point. If vibration is present, try adjusting the RESPONSE parameter under ADJUST A0, DRIVE A1 to a slightly lower value.
5. Make any final changes to motion parameters to obtain the desired ride.
6. Remove all weights from the car. Staying away from the terminal floors, make one, two and multi-floor runs up and down.
7. Add weight to the car, approximately 100 pounds at a time. Staying away from the terminal floors, observe one, two, and multi floor runs to be sure that the car rides well under all load conditions. Keep adding weight until the car has full load, less the weight of anyone riding the car.
8. Remove all jumpers from the Limit board and re-install all connectors.
9. Go to Section 8 of this manual and perform a learn procedure for the Terminal Slowdowns.
10. When you are satisfied with the ride quality of the car proceed to Section 9 for the load weigh and pre-torque set up procedures, if so equipped.

Drive Reference Information

Using the Programmer

A hand held programmer is provided with the HPV 900 drive. Use it to program the drive and display drive data to facilitate tuning and troubleshooting.

There are three menu levels: The Menu level, the Sub-menu level, and the Entry level. There are five keys on the front of the programmer. These keys perform different function, depending at what menu level the programmer is.

When the programmer is at the Main Menu level, the left and right arrows move the programmer between the Main Menu selections. The up and down keys move the programmer into the various Sub-Menus at each Main Menu selection. Pressing the “Enter” key will move the programmer into the Sub-Menu currently displayed on the programmer.

When the programmer is at the Sub-Menu level the up and down arrows display various parameters in the Sub-Menu. Pressing the “Escape” key will move the programmer back to the Main Menu level. Pressing the “Enter” key while at the Sub-Menu level moves the programmer into the Entry level to modify the displayed parameter.

At the Entry level, the left and right arrows move a cursor to highlight data. When a digit is highlighted, pressing the up arrow will increase the value, and pressing the down arrow will decrease it. Pressing the “Enter” key will save the value displayed on the programmer. Pressing the “Escape” key will move the programmer back to the Sub-Menu level.

Drive Parameters

The following table lists drive parameters, an explanation of the parameters, and how they should be set. Please refer to “Drive Programming” on page 5-6 for information on setting these parameters.

Table 5.1 HPV 900 Drive Parameters

Adjust A0 Drive A1			
Parameter	**Units**	**Value**	**Description**
Contract Car Speed	Feet per Minute	Contract Speed	Rated car speed. Used to display the speed of the car and the speed command in FPM at the Elevator Data D1 menu.
Contract Mtr Speed	Revolutions per Minute	Motor RPM at Contract Speed	RPM motor should be turning when car is running at rated speed.
Response	Radians	10.0	Controls speed regulator response. Sets the bandwidth of the speed regulator. Larger numbers = greater response.
Inertia	Seconds	2.0	The moment of inertia of the system. Please refer to “Drive Programming” on page 5-6.
Inner Loop XOver	Radian per Second	2.0	Controls the frequency of the inner speed loop crossover in the speed regulator.
Gain Reduce Mult	Percentage of Gain	100	Sets gain for the speed regulator in Gain Reduce mode. It is a percentage, and modifies the Response parameter.
Gain Chng Level	Percentage of Rated Speed	0.00	Speed at which the Gain Reduce mode becomes active.

Table 5.1 HPV 900 Drive Parameters

Tach Rate Gain	None	0.00	Controls Tach Rate Gain function. Should not be used except to tune out vibrations that cannot be removed by any other means. **Contact MCE before activating.**
Spd Phase Margin	Degrees	80.0	Sets the phase margin of the speed regulator, assuming a pure inertial load.
Ramped Stop Time	Seconds	0.20	Sets motor torque ramp down after the drive is stopped.
Contact Fault Time	Seconds	0.50	Maximum amount of time drive will wait for main contactor auxiliary contact before declaring a Contactor Fault.
Brake Pick Time	Seconds	1.00	If Brake Pick fault is enabled, sets maximum amount of time drive will wait for brake contactor auxiliary contact before declaring a Brake Pick Fault. Not activated on IntellaNet controls.
Brake Hold Time	Seconds	0.20	If the Brake Hold fault is enabled, sets maximum amount of time drive will wait for brake hold feedback to match brake pick command before declaring a Brake Hold Fault. Not activated on IntellaNet controls.
Overspeed Level	Percentage of Rated Speed	115	Speed level at which an Overspeed fault is declared. Set in conjunction with Overspeed Time.
Overspeed Time	Seconds	1.00	Amount of time overspeed condition must exist before an Overspeed fault is declared. Set in conjunction with Overspeed Level.
Overspeed Mult	Percentage of Rated Speed	125	Sets the percentage of rated speed for the Overspeed Test at the User Switches C1 menu.
Encoder Pulses	Pulses per Revolution	From Encoder Data	PPR value of the encoder. Used to determine the speed at which the motor is turning.
Spd Dev Lo Level	Percentage of Rated Speed	10.0	Sets the amount of speed deviation underflow allowed before declaring a Speed Deviation fault. Set in conjunction with Spd Dev Time.
Spd Dev Time	Seconds	0.50	Sets the amount of time allowed for speed deviation level to be exceeded before declaring a Speed Deviation fault.
Spd Dev Hi Level	Percentage of Rated Speed	10.0	Sets the amount of speed deviation exceeding the demanded velocity allowed before declaring a Speed Deviation fault. Set in conjunction with Spd Dev Time.
Spd Command Bias	Volts	0.00	Subtracts a voltage from the speed command signal. Not used on IntellaNet controls.
Spd Command Mult	None	1.00	Multiplies the speed command.
Pre Torque Bias	Volts	0.00	Subtracts a voltage from the pretorque signal. Not used on IntellaNet controls.
Pre Torque Mult	None	1.00	Multiplies the pretorque signal.
Zero Speed Level	Percentage of Rated Speed	1.00	Threshold for zero speed detection. Only used to generate the Zero Speed output, not used on IntellaNet controls.
Zero Speed Time	Seconds	0.10	Amount of time required before turning on the Zero Speed output. Not used on IntellaNet controls.
Up/Down Threshold	Percentage of Rated Speed	1.00	Sets the threshold for up and down speed detection. It is only used to generate the Car Going Up and Car Going Down outputs. Not used on IntellaNet controls.

Table 5.1 HPV 900 Drive Parameters

Mtr Torque Limit	Percentage of Rated Torque	200	Sets the maximum torque allowed in the forward motoring mode.
Regen Torq Limit	Percentage of Rated Torque	200	Sets the maximum torque allowed in the regenerative motoring mode.
Flux Wkn Factor	Percentage of Torque Limit	100	Limits the maximum amount of torque at higher speeds.
Ana Out 1 Offset	Percentage	0.00	Sets an offset for scaling the output voltage of Analog output 1. 0.00 sets no offset, making the output bi-polar.
Ana Out 2 Offset	Percentage	0.00	Sets an offset for scaling the output voltage of Analog output 2. 0.00 sets no offset, making the output bi-polar.
Ana Out 1 Gain	None	0.70	Scales voltage output at Analog Output 1. A value of 0.70 allows speed command to be set to +7 volts at rated speed.
Ana Out 2 Gain	None	0.70	Scales voltage output at Analog Output 2. A value of 0.70 allows speed feedback to be set to +7 volts at rated speed.
Flt Reset Delay	Seconds	5.00	When drive is set for automatic resets, sets amount of time for drive to wait before resetting a fault. Not used on IntellaNet controls.
Fault Reset/Hour	Faults	3	When the drive is set for automatic resets, this parameter sets the maximum amount of times in a one-hour period the drive will reset a fault. Not used on IntellaNet controls.
Adjust A0 Power Convert A4			
Parameter	**Units**	**Value**	**Description**
Id Reg Diff Gain	None	1.00	Sets differential gain of current regulator flux generation.
Id Reg Prop Gain	None	0.30	Sets proportional gain of current regulator flux generation.
Iq Reg Diff Gain	None	1.00	Sets differential gain of current regulation of motor torque.
Iq Reg Prop Gain	None	0.30	Sets proportional gain of current regulation of motor torque.
PWM Frequency	kHz	10	Sets the PWM, or carrier frequency, of the drive. Can be adjusted to tune out audible noise in the motor. If the number is increased the drive may need to be de-rated. Please contact MCE if it is necessary to increase this value.
UV Alarm Level	Percentage of Nominal Voltage	90.0	Sets the level at which an Under Voltage alarm is declared.
UV Fault Level	Percentage of Nominal Voltage	80.0	Sets the level at which an Under Voltage fault is declared.
Extern Reactance	Percentage of Reactance	0.00	Sets the value of the reactor connected between the drive and the motor. Set as a percentage of base impedance.
Input L-L Volts	AC Volts	From AC Line	Tells the drive what the input voltage should be.

Table 5.1 HPV 900 Drive Parameters

Adjust A0 Motor A5			
Parameter	**Units**	**Value**	**Description**
Motor ID	None	Default Motor	Programs specific values for various motor parameters. The Default Motor selection requires various values to be entered for these parameters.
Rated Mtr Power	Horse Power or Kilowatts	From Motor Nameplate	Tells the drive the horsepower or kilowatts rating of the motor.
Rated Mtr Volts	AC Volts	From Motor Nameplate	Tells the drive the rated motor voltage.
Rated Excit Freq	Hertz	From Motor Nameplate	Tells the drive the rated motor excitation frequency. Typically 60.
Rated Motor Current	Amperes	From Motor Nameplate	Tells the drive the rated motor current.
Motor Poles	None	From Motor Data	Tells the drive how many poles the motor has. The formula is: **(120 Rated Frequency**) / **No Slip Motor RPM**.
Rated Motor Speed	Revolutions per Minute	From Motor Data or Adaptive Tune	Speed motor should be turning when excited at its rated frequency and producing rated power. **Must be less than 900 RPM on 8 pole motors, 1200 RPM on 6 pole motors, or 1800 RPM on 4 pole motors or drive set up fault will occur.**
% No Load Current	Percentage of Rated Current	From Adaptive Tune	Tells the drive the current required to run the motor at rated speed with no load on the motor. Calculated during the Adaptive Tune.
Stator Leakage X	Percentage Reactance of Base Impedance	9.00	Sets the stator reactance leakage as a percentage of base impedance. Base impedance is based on parameters Rated Mtr Pwr and Rated Mtr Volts.
Rotor Leakage X	Percentage Reactance of Base Impedance	9.00	Sets the rotor reactance leakage as a percentage of base impedance. Base impedance is based on parameters Rated Mtr Pwr and Rated Mtr Volts.
Stator Resist	Percentage Resistance of Base Impedance	1.30	Sets the amount of resistance in the motor stator as a percentage of base impedance. Base impedance is based on parameters Rated Mtr Pwr and Rated Mtr Volts.
Motor Iron Loss	Percentage of Rated Power	0.50	Sets the motor iron loss at the rated frequency of the motor.
Motor Mech Loss	Percentage of Rated Power	1.00	Sets the motor mechanical losses at the rated frequency of the motor.
Ovld Start Level	Percentage of Rated Current	110	Sets the current level at which the motor will be allowed to continuously run. Defines the current component of the motor overload curve**.**
Ovld Time Out	Seconds	60.0	Sets the amount of time before a motor overload trip occurs. **(Ovld Start Level) + (40% Rated Motor Current)**
Flux Sat Break	Percentage of Flux	75.0	Sets the flux saturation curve slope change point.
Flux Sat Slope 1	Slope	0.00	Sets the flux saturation curve for low flux conditions.
Flux Sat Slope 2	Slope	50.0	Sets the flux saturation curve for high flux conditions.

Table 5.1 HPV 900 Drive Parameters

Configure C0 User Switches C1			
Parameter	**Units**	**Value**	**Description**
Spd Command Src	Logic	Serial	Sets source of the speed command. IntellaNet uses a serial interface.
Run Command Src	Logic	Serial & External	Sets source of the run command. IntellaNet uses both a serial interface and an input at TB1-2.
Hi/Lo Gain Src	Logic	Internal	Sets source of the Gain Switch. IntellaNet uses the internal activation based on car speed.
Speed Reg Type	Logic	Elev Spd Reg	Defines which type of speed regulator to use.
Motor Rotation	Logic	Forward	Allows motor rotation to be reversed.
Spd Ref Release	Logic	Reg Release	Tells the drive when to release the Speed Reference. Reg Release sets it to release when Speed Regulator is released.
Contact Confirm Src	Logic	External TB1	Sets source of the Contact Confirm signal. IntellaNet uses an input at TB1-3.
Pre Torque Src	Logic	Serial	Sets source of the pretorque signal. IntellaNet uses a serial interface.
Pre Torque Latch	Logic	Latched	Determines if the pretorque signal is latched. It must be set to “Latched” for IntellaNet controllers.
Ptorq Latch Clck	Logic	Serial	If the Pretorque Latch parameter is set to “Latched” this parameter determines the source of the latch. Set to “Serial” for IntellaNet controllers.
Fault Reset Src	Logic	Serial	Determines the source of the fault reset signal. Set to “Serial” for IntellaNet controllers.
Overspd Test Src	Logic	External TB1	Determines the source of the overspeed test. Set to “External TB1” for IntellaNet controllers.
Brake Pick Src	Logic	Internal	Determines the source of the Brake Pick signal. Set to “Internal” for IntellaNet controllers.
Brake Pick Cnfm	Logic	None	Allows the Speed Reference to be released without an external brake input. Set to “Internal” for IntellaNet controllers.
Brake Hold Src	Logic	Internal	Allows drive to hold car stopped through Brake Pick output. Set to “Internal” for IntellaNet controllers.
Ramped Stop Sel	Logic	Ramp on Stop	Allows the drive to use torque ramp down based on the parameters Stop Time and Ramp Down En Src.
Ramp Down En Src	Logic	Run Logic	Allows the drive to ramp down the motor torque when the run command is removed.
Brake Pick Flt Ena	Logic	Disable	Disables Brake Pick fault. Set to “Disable” on IntellaNet controllers.
Brake Hold Flt Ena	Logic	Disable	Disables Brake Hold fault. Set to “Disable” on IntellaNet controllers.
Ext Torq Cmd Src	Logic	None	Tells the drive if an external torque command is being used. Set to “None” on IntellaNet controllers.

Table 5.1 HPV 900 Drive Parameters

Configure C0 Logic Inputs C2			
Parameter	**Units**	**Value**	**Description**
Logic In 1 TB1-1	Logic	Drive Enable	Sets this input to turn on drive enable.
Logic In 2 TB1-2	Logic	Run	Sets this input to enable the run command.
Logic In 3 TB1-3	Logic	Contact Confirm	Sets this input to confirm the main contactor is picked.
Logic In 4 TB1-4	Logic	No Function	No function assigned to this input.
Logic In 5 TB1-5	Logic	No Function	No function assigned to this input.
Logic In 6 TB1-6	Logic	No Function	No function assigned to this input.
Logic In 7 TB1-7	Logic	No Function	No function assigned to this input.
Logic In 8 TB1-8	Logic	No Function	No function assigned to this input.
Logic In 9 TB1-9	Logic	No Function	No function assigned to this input.
Configure C0 Logic Outputs C3			
Parameter	**Units**	**Value**	**Description**
Log Out TB1-14	Logic	No Function	No function assigned to this output.
Log Out TB1-15	Logic	No Function	No function assigned to this output.
Log Out TB1-16	Logic	No Function	No function assigned to this output.
Log Out TB1-17	Logic	No Function	No function assigned to this output.
Relay Coil 1	Logic	Ready to Run	This relay is picked when the drive is ready to run and no faults are present.
Relay Coil 2	Logic	Close Contact	Turns on the output when the drive is enabled, commanded to run, and no faults are present.
Ana Out 1 TB1-33	Logic	Speed Ref	Sets the analog output to monitor the speed reference.
Ana Out 2 TB1-35	Logic	Speed Feedbk	Sets the analog output to monitor the speed feedback.
Speed Command	Feet per Minute		Displays the command before the speed reference generator.
Speed Reference	Feet per Minute		Displays the speed reference after the speed reference generator.
Speed Feedback	Feet per Minute		Displays the encoder feedback.
Speed Error	Feet per Minute		Displays speed error.
Pre Torque Ref	Percentage of Rated Torque		Displays pretorque reference.
Spd Reg Torq Cmd	Percentage of Rated Torque		Displays torque command from the speed regulator.
Tach Rate Cmd	Percentage of Rated Torque		Displays torque command after the tach rate gain function.
Aux Torq Cmd	Percentage of Rated Torque		Displays feed forward torque command from auxiliary source.
Est Inertia	Seconds		Displays estimated elevator system inertia.

Table 5.1 HPV 900 Drive Parameters

Display D0 Power Data D2			
Parameter	**Units**		**Description**
Torque Reference	Percentage of Rated Torque		Displays the torque reference used by the vector control.
Motor Current	Amperes		Displays RMS motor current.
% Motor Current	Percentage of Rated Current		Displays percentage of motor current.
Motor Voltage	AC Volts		Displays the RMS motor voltage.
Motor Frequency	Hertz		Displays the electrical frequency output.
Motor Torque	Percentage of Rated Torque		Displays the calculated motor torque output.
Power Output	Kilowatts		Displays calculated power output of the drive.
DC Bus Voltage	DC Volts		Displays the measured DC bus voltage.
Flux Reference	Percentage of Rated Flux		Displays the flux reference used by the vector control.
Flux Output	Percentage of Rated Flux		Displays measured flux output.
Slip Frequency	Hertz		Displays the commanded slip frequency.
Motor Overload	Percentage of Overload		Displays percentage of motor overload trip level reached.
Drive Overload	Percentage of Overload		Displays percentage of drive overload trip level reached.
Flux Current	Percentage of Rated Current		Displays the measured flux producing current.
Torque Current	Percentage of Rated Current		Displays the measured torque producing current.
Flux Voltage	Percentage of Rated Voltage		Displays the flux voltage reference.
Torque Voltage	Percentage of Rated Voltage		Displays the torque voltage reference.
Base Impedance	Ohms		Displays the calculated base impedance.
Est No Load Current	Percentage of Rated Current		Displays command before speed reference generator.
Est Rated RPM	Revolutions per minute		Displays speed reference after speed reference generator.
Speed Command	Feet per Minute		Displays the encoder feedback.
Speed Reference	Feet per Minute		Displays the speed error.
Speed Feedback	Feet per Minute		Displays the pretorque reference.

Drive Faults

The following table lists detected drive faults, along with a description and corrective action.

Table 5.2 HPV 900 Drive Faults

Fault	Description	Corrective Action
A to D Fault	Analog to digital converter on control board not responding.	Cycle power to controller and see if fault clears. If not, replace Control board.
Brk Hold Fault	Brake hold state does not match the commanded state.	Disabled on this control.
Brk IGBT Fault	Brake IGBT overcurrent.	An overcurrent of the braking IGBT has occurred. Fault latches, but does not shut the car down until it stops to allow passengers to safely get off. Confirm motor data is correctly entered into the drive, that the braking resistance at TB1+3 and TB1 +4 is connected and sized correctly, and that the car is balanced correctly.
Brk Pick Fault	Brake pick state does not match the commanded state.	Disabled on this control.
Charge Fault	DC Bus has not charged.	The DC Bus has not reached the desired stabilized voltage level within 2 seconds.
Contactor Fault	Contactor state does not match the commanded state.	The drive has turned on the command to close the Main Contactor and the Contactor Confirm signal at TB1-3 is not present for the amount of time specified by “Contact Flt Time” parameter.
Cube Data Fault	The drive parameters are invalid.	Check all drive parameters. Cycle power to the drive. If fault recurs, replace Control board.
Cube ID Fault	The drive identification is invalid.	Cycle power to the drive. If fault recurs replace Control board.
Curr Reg Fault	Actual current does not match the commanded current.	Check motor connections and motor windings for open circuit. Check main contactor for bad contact. If OK, bad current sensor or bad drive unit.
DCU Data Fault	The DCU parameters are not set correctly.	Check all drive parameters. Cycle power to drive. If fault recurs, replace Control board.
Drv Overload	The drive has exceeded the overload curve.	Check motor connections, main contactor contacts and motor windings. Make sure brake is lifting. Verify encoder is properly connected and feedback matches motor speed.
Encoder Fault	The drive is in a run condition and encoder is not operating.	Check encoder connections. If drive has been running, replace encoder. If this fault occurs on initial start up of drive, swap A and A- connections to drive.
Fuse Fault	The DC Bus fuse on the drive is open.	Check fuse. If OK, check motor connections and check motor for continuity from windings to ground. If OK, drive unit needs to be replaced.
Ground Fault	The sum of all phase currents has exceeded 50% of the rated amperage of the drive.	Disconnect motor from drive. Cycle power to drive. If problem clears, possible bad motor or wiring. If problem does not clear, possible bad grounding of system.
Mtr Data Fault	Invalid motor parameters.	Check all drive parameters. Cycle power to the drive. If fault recurs, replace Control board.
Overcurr Fault	Phase current exceeded 300% of rated current.	Check encoder. Possible bad encoder or encoder connection. Possible bad motor or motor connection. Check motor, motor connections, motor windings and main contactor contacts.

Table 5.2 HPV 900 Drive Faults

Overspeed Fault	Motor speed exceeded user entered parameters.	Check parameters OVERSPEED LEVEL (A1) and OVERSPEED TIME (A1). If OK, check tracking of motor to desired speed and tune regulator for better performance.
Overtemp Fault	The heatsink temperature is too high.	Temperature of the drive heatsink has exceeded 105C (221F). Check fans on drive; make sure airflow is adequate.
Overvolt Fault	The DC Bus voltage is too high.	The voltage on the DC Bus exceeded 850 volts on a 460-volt drive or 425 volts on a 230-volt drive. Check braking resistance at TB1+3 and TB1 +4 is connected. Possible high AC line, check AC input voltage to drive. If everything checks OK, possible braking IGBT. Drive unit needs to be replaced.
PCU Data Fault	PCU parameters not correct.	Check all drive parameters. Cycle power to drive. If fault recurs, replace Control board.
Phase Fault	Open motor phase.	Check motor, motor connections, motor windings and main contactor contacts.
Setup Fault 1	Rated motor speed, poles and frequency not set correctly.	Parameters “RATED EXCIT FREQ” (A5), “RATED MTR SPEED” (A5) and “MOTOR POLES” (A4) do not satisfy the formula: **9.6 {120 (Excit Freq)} - {(Motor Poles) (Motor Speed)} 1222.3**
Setup Fault 2	Encoder PPR and motor poles not set correctly.	Check “ENCODER PULSES” and “MOTOR POLES” parameters. The values must satisfy the formula: **{(Encoder Pulses) / (Motor Poles)} 64**
Setup Fault 3	Motor Poles parameter not set correctly.	The “MOTOR POLES” parameter must be set to an even number.
Setup Fault 4	Encoder PPR and Motor Speed parameters not set correctly.	Check “ENCODER PULSES” (A1) and “RATED MTR SPEED” (A1) parameters. The values must satisfy the formula: **300,000 (Rated Motor Speed) (Encoder Pulses) 18,000,000**
Setup Fault 5	Rated Motor Power, Rated Motor Voltage not set correctly.	Check “RATED MOTOR PWR” (A4) and “RATED MTR VOLTS” (A4) parameters. They must satisfy the formula: **(.07184) {(Motor Pwr) / (Motor Voltage)} Drive Current Rating**
Undervolt Fault	DC Bus voltage low.	Voltage on the DC Bus has dropped below the user-entered values of parameters “INPUT L-L Volts (A4) and “UV FAULT LEVEL” (A4). Check braking resistance and connections. Verify proper AC input voltage to drive. Possible disturbances on the AC line.

KEB/Torqmax F5 AC Drive

In This Section

This section contains startup and adjustment instructions for IntellaNet systems using the F5 Torqmax drive manufactured by KEB.

Before starting this procedure:

- Read Section 1 on Personal and Equipment Safety completely.
- Read Section 2 on Piping & Wiring completely.
- Read this section completely.

6

Danger

Elevator control products must be installed by experienced field personnel. This manual does not address code requirements. The field personnel must know all the rules and regulations pertaining to the safe installation and running of elevators.

Controller Power Up

Danger

Perform the following procedures with controller power off. Do not apply power to the controller until instructed to do so.

1. Refer to sheet 3 of the wiring diagrams. At the top of the page you will see the main line disconnect voltage. Verify that the main line voltage listed on the wiring diagrams matches that which is supplied by the building. If not, contact MCE Technical Support before proceeding.
2. Refer to Figure 6.1. Use an ohmmeter to check for continuity between relay board terminals GOV1 and STP (safety circuit). If there is no continuity refer to sheet 4 of the wiring diagrams and troubleshoot for the open.
3. With the meter on terminals GOV1 and STP, open each device in the safety circuit one at a time and confirm that each device will open the safety circuit if actuated.

Figure 6.1 Safety Circuit and Locks

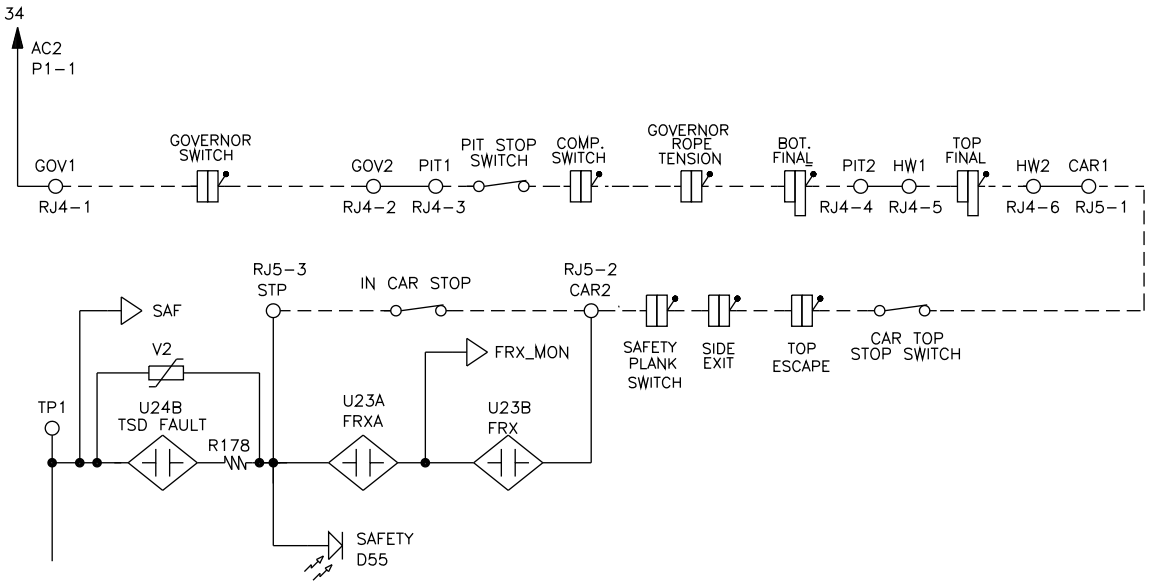

4. Open the governor switch.

5. Refer to Figure 6.2. Check for continuity between relay board terminals G1 and G2 (car gate switch). If there is no continuity refer to sheet 4 of the wiring diagrams and troubleshoot for the open.
6. With the meter still on terminals G1 and G2, open the gate switch on the car and confirm that opening the switch opens the car gate circuit.

Figure 6.2 Relay Board Terminals G1 and G2 (Car Gate Switch)

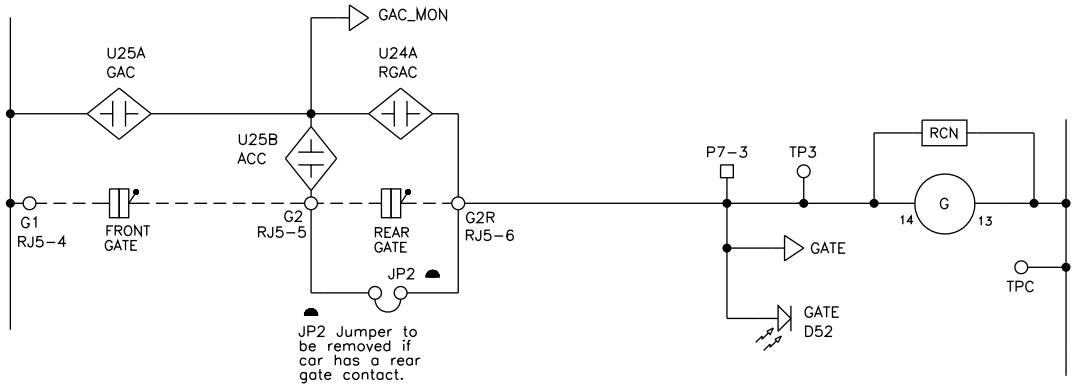

7. If there is no rear door on the car, go to step 10. If there is a rear door, go to step 8.
8. Check for continuity between relay board terminals G2 and G2R (rear car gate switch). If there is no continuity, refer to sheet 4 of the wiring diagrams and troubleshoot for the open.
9. With the meter still on terminals G2 and G2R, open the rear gate switch on the car and confirm that opening the switch opens the rear car gate circuit.
10. If there is no rear door on the car, install a permanent jumper between relay board terminals G2 and G2R.
11. Refer to Figure 6.3. Check for continuity between relay board terminals L1 and L3A (door locks). If there is no continuity refer to sheet 4 of the wiring diagrams and troubleshoot for the open.

Figure 6.3 Relay Board Terminals L1 and L3A (Door Locks)

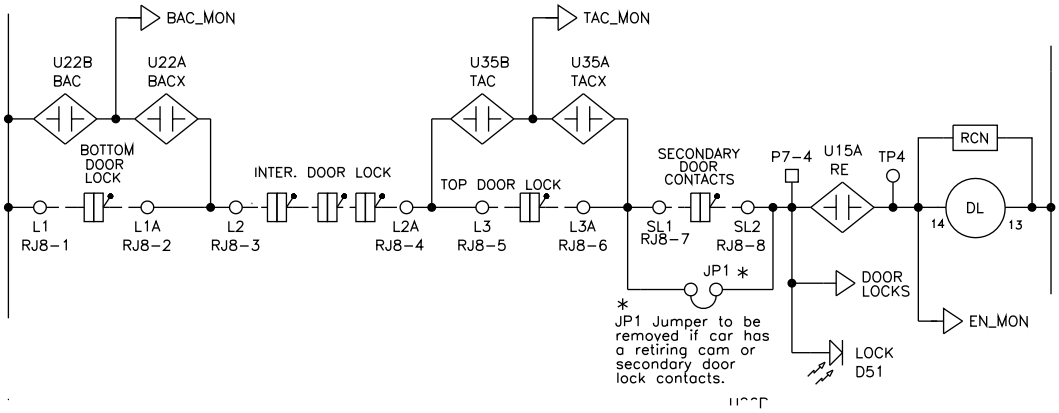

6

12. With the meter still on terminals L1 and L3A, verify that opening any door lock will open the circuit. Test all locks. Confirm that the lock circuit is opened by any lock.
13. If this car has seismic service, go to step 14. If not, go to step 18.
14. Refer to sheet 5 of the wiring diagrams and Figure 6.4 below. Place an ohmmeter from relay board terminal AC2 to terminal CTOP. If the car top inspection switch is in the automatic position, there should be continuity. If not, check the switch and the wiring and correct as necessary.

Figure 6.4 Relay Board Terminals AC2 to CTOP

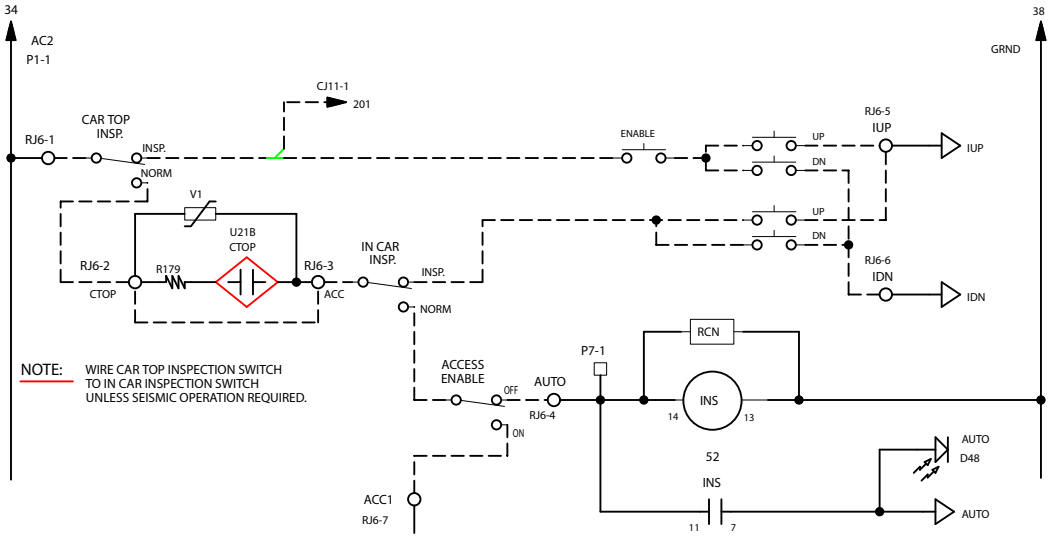

15. Confirm that placing the switch in the inspection position opens the circuit. Place the switch in the automatic position for initial power up.
16. Connect an ohmmeter from relay board terminal ACC to terminal AUTO. If the in-car inspection switch is in the automatic position, there should be continuity. If not, check the switch and the wiring and correct as necessary.
17. Confirm that placing the switch in the inspection position opens the circuit. Place the switch in the automatic position for initial power up.
18. Refer to sheet 5 of the wiring diagrams and Figure 6.4. Connect an ohmmeter between relay board terminals AC2 and AUTO. If the car top inspection switch and the in-car inspection switches are in the automatic position, there should be continuity. If not, check switches and wiring and correct as necessary.
19. Confirm that placing either switch in the inspection position opens the circuit. Place both switches in the automatic position for initial power up.
20. Refer to sheet 5, line 55 of the wiring diagrams. Check continuity between relay board terminals UN1 and UN2 (up normal limit). Confirm that the switch is closed when the car is away from the top floor. It must be set to open 1” below the top floor and stay open through the entire stroke of the buffer.
21. Refer to sheet 5, line 55 of the wiring diagrams. Check continuity between relay board terminals DN1 and DN2 (down normal limit). Confirm that the switch is closed when the car is away from the bottom floor. It must be set to open 1” above the bottom floor and stay open through the entire stroke of the buffer.

22. Place the inspection switch on the relay board in the down (INSP) position.
23. Place the Door Disable switch in the down (disable) position.

Danger

Have someone stand by the disconnect switch the first time power is applied to the controller. If the car starts to move or a dangerous condition is noted, immediately remove power.

24. Apply power to the controller.

Danger

The controller now has power applied. Some of the following procedures are performed with power on. Use extreme caution and observe all safety precautions.

25. While the controller is powering up, a message on the controller display prompts you to press “1” to alter parameters. Press “1” on the keypad to access parameter menus at this time.
26. On the display keypad, press the “#” key until the cursor (the flashing square) is in front of the menu item Miscellaneous Parameters. Press the “0” key.
27. Select Inspection Speed. Set to 045 fpm.
28. Move the cursor down to Main Contactor Hold Time. Set it to “10” (1 second).

Note

If the hoist motor brake is sluggish, set Main Contactor Hold Time to a larger value. This parameter controls how long the drive stays enabled after a stop is demanded. Setting it too low will cause the car to roll before the brake sets fully on stop.

29. Select Return and press the “0” key to return to the main menu.
30. Select Motion Parameters. Set Max Speed to the contract speed of the car.
31. Return to the main menu. Select the Terminal Slowdowns menu.
32. Select Press Enter to Disable Limit Section, press “0.” A message will warn “Limit Section of Relay Card Disabled! Section is Disabled Until Relearned!” Press any key on the keypad to return to the previous sub-menu.
33. Select Return to Main Menu. Press the “0” key.
34. Select Write Values to Non Volatile Memory. Press the “0” key.
35. A dialog will ask if you are sure you want to save the values. With the cursor in front of Yes, press “0.”
36. A message will confirm that the values have been saved. Press the reset button (S1) on the MPU to exit the menus.
37. While powering up, the MPU establishes communications with the Car Top Encoder and the Car Station. If they are not connected, the following message will appear:

    “Incompatible LON Software or Car Station Communication Failure. Place Car on Inspection and then Press 2 for Inspection Operation Only.”

38. Make sure the inspection switch on the relay board is set to INSP. Press the “2” key on the keypad. The diagnostic screen will appear.

Relay Board initial setup is complete. The drive must now be programmed.

Auto Tuning and Encoder Data Loading

The F5 drive provides auto tuning procedures which allow the drive to directly learn motor characteristics. Tuning both improves performance and automatically calculates some motor values you would otherwise have to enter manually.

For permanent magnet, AC gearless machines, if a Hiperface, EnDat, or Sin/Cos encoder was pre-installed by the motor manufacturer, motor data information may have been stored in the encoder. The Torqmax drive allows you to read and store this data, saving more setup time, avoiding auto-tuning, and automatically learning the encoder position with relation to a pole of the motor.

Danger

Motor circuits may have high voltage present any time AC power is applied to the controller, even if the motor is not rotating. Wait 10 minutes after removing AC power to allow capacitors to discharge before you open the drive cover. Use extreme caution. Do not touch any circuit board, power device, or connection without ensuring that high voltage is not present.

Torqmax/Keb F5 Drive Introduction

The Torqmax F5 drive is a Keb F5 with custom software specific to Motion Control Engineering. Take the time to study the drive manual. It has very important startup and other information that are beyond the scope of this manual.

Digital Operator

The keypad and LED display are mounted on the digital operator. The operator must be plugged into the drive or the drive will not function. If the operator is removed while the drive is operating, the drive will shut down immediately. If you must remove the operator, do so while the elevator is standing still.

Figure 6.5 Torqmax F5 Drive

Figure 6.6 Torqmax Display

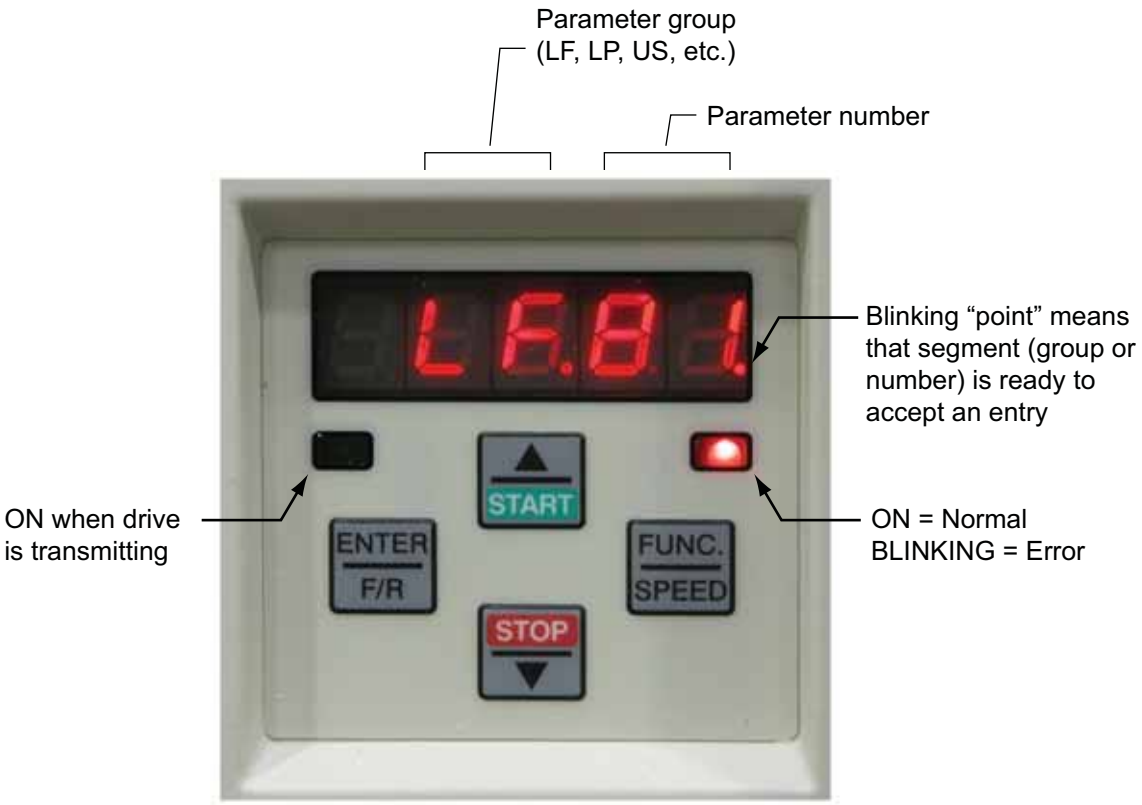

Keypad Operation

Drive parameter LF.3 determines drive mode. With LF.3 in Run mode, the elevator can be run from the controller Inspection controls or during normal operation.

Please refer to “KEB Keypad Overview” on page 6-8.

Clear Error

If an error is displayed (E. UP, etc.), the drive will shut down. To clear the error:

- Press ENTER

The E.ENCC error is an exception and must be cleared using parameter LF.26.

Figure 6.7 KEB Keypad Overview

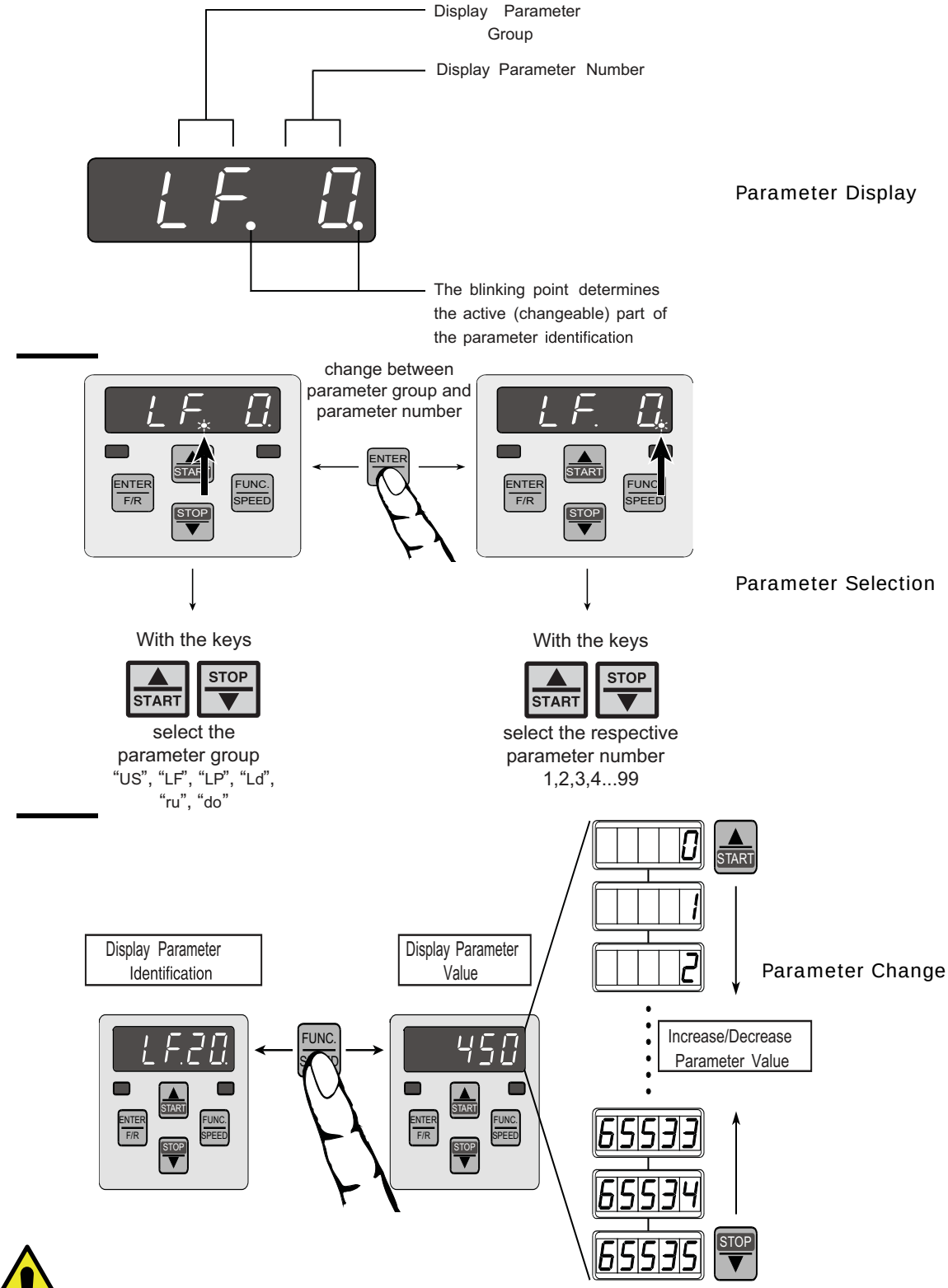

Changes are accepted and saved only after ENTER is pressed.
Some parameters cannot be changed while the elevator is operating.

Drive Operation Overview

The LF.3 parameter determines the mode the drive is in. The drive default mode is “run.” Generally:

- Set LF.3 to Stop to adjust parameter values
- Press Enter to save the adjusted value
- Set LF.3 to run and press Enter to run the elevator using the controller Inspection controls or for normal operation

Drive Motor/Encoder Setup Overview

Figure 6.8 F5 Motor/Encoder Setup Overview

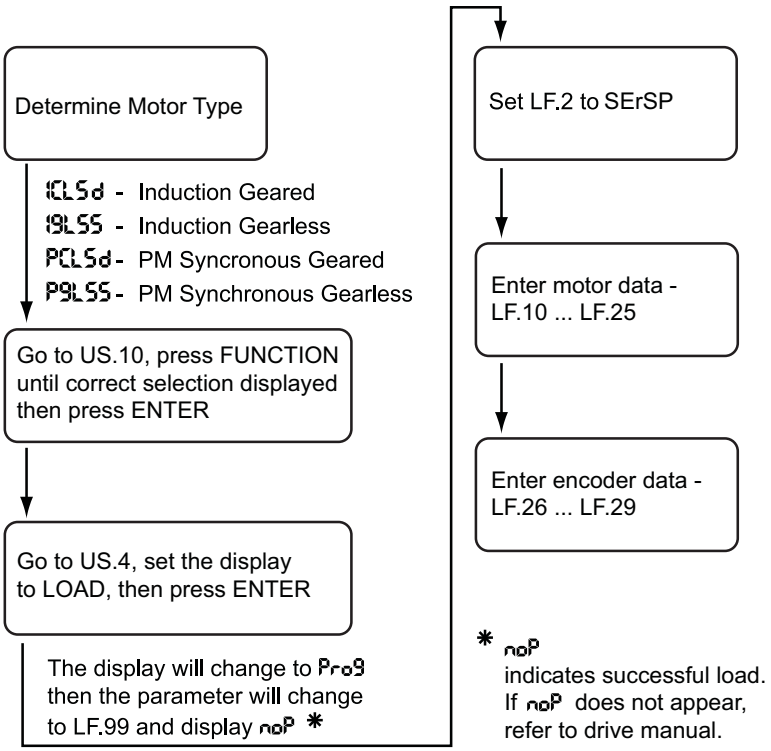

Check Correct Motor/Control The drive is set up at the factory to match your job configuration. However, before anything else, check that read-only parameter LF.4 displays the correct motor type:

- Induction geared/Closed Loop: ICLSd
- Induction gearless/Closed Loop: IgLSS
- PM Synchronous geared/Closed Loop: PCLSd
- PM Synchronous gearless/Closed Loop: PgLSS

Check Control Mode Drive parameter LF.02 determines control mode. Check that control mode is set to SerSP (Serial Speed Control).

Learn or Enter Motor or Encoder Data In order to enter motor nameplate data into the drive, learn motor information, or learn encoder information, you must activate parameter LF.3 appropriately:

- conF (configuration): Operation troubleshooting (90 second time-out)
- S Lrn: Auto tuning drive to motor
- run: Sets drive to run mode
- I Lrn (inertia learn): Learns system inertial / activates FFTC.
- P Lrn (pole learn): Learns motor pole positions (see drive manual).
- StoP: Motor cannot run. Parameter changes allowed with serial control.

Note

When StoP is active, the drive will not respond to the direction inputs and therefore, the motor will not run.

Auto-tuning AC Induction Motors to the F5 Drive

Auto-tuning provides better drive to motor matching and performance than manually entering parameters. Before beginning, make sure that the following parameters have been loaded into the drive:

- Rated Motor Power (horsepower) (LF.10)
- Rated Motor Speed (rpm) (LF.11)
- Rated Motor Current (A) (LF.12)
- Rated Motor Frequency (Hz) (LF.13)
- Rated Motor Voltage (LF.14)
- Rated Power Factor (LF.15) (not viewable for PMAC machines)

1. Verify the controller is on Inspection operation.
2. Remove one brake wire from the controller or reduce brake pick voltage level to prevent the brake from picking.
3. Set LF.3 to S Lrn. The display will change to StArt.
4. Hold the controller Enable button down and select the Up direction. The motor contactor should engage but the brake should not pick. Motor current will begin to flow and the drive display will change to LS103.

The drive will measure motor parameters as well as parameters in the drive motor stage. The drive display will change as different values are measured.

5. Continue holding the Enable and Up direction switch until the drive displays “done” (five minutes is typical).
6. Release the Enable and Up direction switches. The drive will display CALC and complete updating its parameters.
7. Return the drive to Run mode (LF.3). Reconnect the brake wire.

If the auto-tune was not successful, the drive will report:

- FAIL: Auto-tuning was interrupted. Repeat the procedure.
- FAILd: There is a configuration error, probably an incorrectly set parameter, that is preventing the drive from beginning measurements.
  - Check connections and parameters.
  - Consult MCE.

Manual Induction Motor Parameter Entry

The preceding instruction for auto-tuning the drive to the motor provides better performance and should be used instead of manual entry. If auto-tuning is not possible, use manual entry.

Figure 6.9 Entering Induction Motor Data

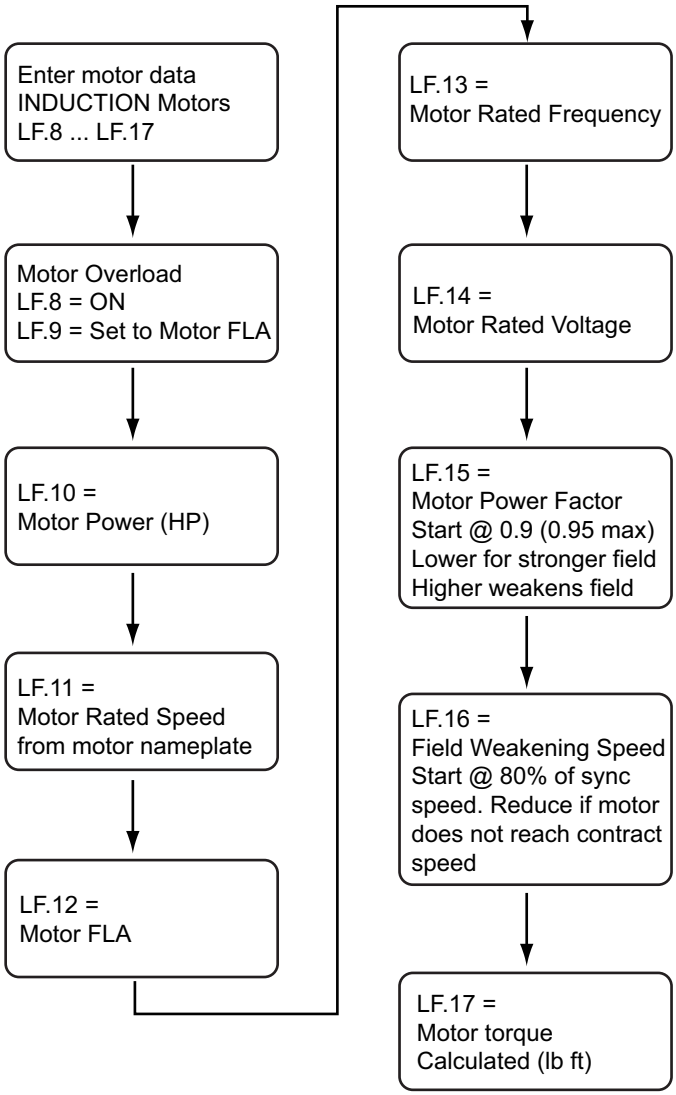

The Drive Manual

The information included above is very basic. If you are not familiar with the Torqmax F5 drive, you must take a few minutes to look through the drive manual to learn how to proceed, what to expect, and what adjustments are available through the drive.

Loading Data from PM AC Encoder to the F5 Drive

EnDat, Sin/Cos, and Hiperface encoders are capable of storing critical operating information, including motor pole position/encoder absolute position data. If the encoder was installed on the machine/motor by the machine supplier, they may have pre-loaded this data into the encoder. If so, you can download it to the drive.

Note

Typically, a drive can be used with many different encoders. This is accomplished by using an interface card in the drive that is specific to the encoder. It is very important that the card installed in your drive is correct for the encoder you are using. Check your drive manual for information about displaying the installed card type. (For Torqmax/Keb F5 drives, parameter 0.LF.26 displays the encoder card type.)

1. Check 0.LF.26 to verify that the encoder card matches the encoder you are using.
2. Check drive parameter 2.LF.26 to verify serial communication (“conn” displayed).
3. Go to parameter 3.LF.26 and press Function. The display will change to IdLE.
4. Press the drive UP arrow. The display will change to rdEnc.
5. Press Enter. The display will change to “no”.
6. Press the UP arrow. The display will change to YES.
7. Press Enter. The display will change to rEAd. The drive will read the encoder data and update motor and drive parameters.

This process loads motor parameters LF.10 through LF.19, LF.27, LF.34, LF.35, and LF.77. Refer to the drive manual for more information if necessary.

Learning Encoder Data for PM AC Drives

If the motor data was not pre-loaded into the encoder by the supplier, you will need to learn the information by running the motor. Refer to the procedure for aligning an absolute encoder for use with a permanent magnet motor in the drive manufacturer manual. In general:

- Ropes not on sheave: Set LF.03 to PLrn. This will require the brake to pick and the machine will move slightly.
- Ropes on the sheave: Set LF.03 to SPI. Prevent the brake from lifting and run the test. The machine will not move.

As stated earlier, the drive manual provides a step-by-step start up procedure for preparing the drive to run with your machine. Read and follow the drive manufacturer instructions.

Setting the Drive to Run Mode

Parameter LF.3 allows the drive to be configured, to learn, or to be placed in run mode. To set the drive to run mode:

1. Set LF.3 to **run**.
2. Press **ENTER.**

Auto-tuning PM AC Machines to the F5 Drive

Before beginning, make sure that the following parameters have been loaded into the drive:

- Rated Motor Speed (LF.11)
- Rated Motor Current (LF.12)
- Rated Motor Frequency (LF.13)
- Rated Motor Torque (LF.17)
- Contract Speed (LF.20)

1. Verify the controller is on Inspection operation.
2. Remove one brake wire from the controller or reduce brake pick voltage level to prevent the brake from picking.
3. Set LF.3 to S Lrn. The display will change to StArt.
4. Hold the controller Machine Room Inspection Enable button down and select the Up direction. The motor contactor should engage but the brake should not pick. Motor current will begin to flow and the drive display will change to LS103.

The drive will measure motor parameters as well as parameters in the drive motor stage. The drive display will change as different values are measured.

5. Continue holding the Enable and Up direction switch until the drive displays done.
6. Release the Enable and Up direction switches. The drive will display CALC and complete updating its parameters.
7. Return the drive to Run mode (LF.3). Reconnect the brake wire.

If the auto-tune was not successful, the drive will report:

- FAIL: Auto-tuning was interrupted. Repeat the procedure.
- FAILd: There is a configuration error. Check parameters and connections. Consult MCE if required.

Drive Programming

Use the Torqmax factory manual as a reference but follow the start up and adjusting procedures here.

The drive has been modified to meet MCE specifications. If drive replacement is ever required contact MCE Technical Support. MCE will not accept any drive for repair under warranty without a Return Material Authorization (RMA) number issued by Technical Support.

Once the controller has been powered up, the drive must be programmed to interface correctly with the equipment on the job site. The MCE Testing Department has pre-programmed the drive based on the information provided to us in the survey, but it is important to confirm ALL parameters before attempting to run the car.

The drive may fault on initial power up due to incorrect parameters. This is normal, and may be ignored at this time.

1. Verify that the voltage on the motor nameplate matches the voltage input to the drive. If not, contact MCE Technical Support before proceeding.
2. Confirm that the three leads from the controller to the motor are connected. If there are more than three leads coming out of the motor, make sure that the motor is wired in a 'wye' configuration with correct field rotation, or follow the motor manufacturer recommendation.
3. Confirm that the encoder is connected correctly. Refer to the wiring diagrams for proper hook up.
4. Locate the test sheets that were shipped with the controller. These sheets have the drive parameters calculated for your installation.

In order to operate safely in construction, particular drive parameters must be verified and set. These parameters are set at the factory according to your job requirements but MUST BE CHECKED for correctness BEFORE PROCEEDING.

Caution

Before powering the controller to make these settings, verify that the Inspection/Normal switch is in the Inspection position.

Set drive parameters using the drive keypad. The drive directly controls machine rotation, direction, running speeds, acceleration, and deceleration. If drive parameters are not correctly set, attempting to move the elevator can be VERY DANGEROUS. MCE sets these parameters before shipment, but you must check them at the site.

Danger

Drive parameters must be correctly set. If not, elevator control can be erratic and potentially DANGEROUS. Never change drive parameters while the elevator is running.

1. Read the drive manufacturer manual shipped with this controller. It provides essential information about setting up the drive that cannot be included in the MCE manual. Follow the Initial Start-up procedure described in the drive manufacturer manual.
2. Read and follow the parameter settings in the table shipped with the controller from MCE. The following values are CRITICAL.

Table 6.1 Critical F5 Drive Parameters

Parameter	Parameter
LF.02 Operating mode: SErSP or A SPd*	LF.22 Gear reduction ratio
LF.04 Per Motor	LF.23 Roping ratio
LF.10 Rated motor power (HP)	LF.24 Load weight
LF.11 Rated motor speed	LF.27 Encoder pulses
LF.12 Rated motor current	LF.30 Closed Loop
LF.13 Rated motor frequency	d.LF.33 Ki speed offset decel
LF.14 Rated motor voltage	LF.42 High speed
LF.17 Rated motor torque	US.35: 80
LF.20 Contract speed	
LF.21 Traction sheave diameter	

* Check the factory settings table. Either the A SPd (analog speed control) or the SErSP (serial speed control) input to the drive may be used depending upon the controller software version.

Note

KEB parameters LF.20, LF.21, LF.22, and LF.23 determine the upper limit for the commanded speed. Clipping will occur above this limit. Once LF.20/21/23 are set, LF.22 should be set to about 115 - 125% of LF.25 (estimated gear ratio).

Pre-Torque

Even without a load weigher, the F5 drive will provide pre-torque to prevent roll-back during take off and generally improve take off characteristics. Please refer to the Synthetic Pre-Torque description in the drive manual for set up instructions. Note also that the Pattern Delay settings on the IntellaNet brake screen should be set to 0.6 seconds when using the F5 synthetic pre-torque capability. Please refer to “Brake and Hoistway Devices Parameters” on page 10-27.

Brake Adjustment

Danger

The brake assembly and all pins should be cleaned thoroughly and all spring tension set properly to hold 125% of car capacity prior to adjusting the brake driver. Brake shoes should be checked to insure at least 95% surface contact. If spring tensions are changed after this adjustment, the brake driver will need to be re-adjusted.

1. Refer to Figure 6-10. Verify that the brake coil is connected properly to the controller.
2. Connect a meter across the F- and F+ terminals of the brake driver. Set the meter range high enough to measure the brake lifting voltage level for the job.
3. With no inputs on at the J1 terminal of the brake driver, the V/I-4 pot will be selected. Adjust the V/I-4 pot fully counterclockwise.
4. Turn the ACC1 pot fully clockwise. This will allow for a rapid response of the brake regulator from a lower voltage level to a higher voltage level.
5. Turn the DEC1 pot fully clockwise. This will allow for a rapid response of the brake regulator from a higher voltage level to a lower voltage level. This will also help prevent excessive arcing on the contacts of the BK relay.
6. Turn the main line power OFF. TEMPORARILY place a jumper from J1-1 on the brake driver to AC2 on the controller terminal block.
7. Turn the main line power ON. Adjust the V/I-1 pot until brake pick voltage required for the job is obtained.
8. Turn the main line power OFF. Remove the jumper from terminal J1-1 on the brake driver the brake driver and place it a J1-2.
9. Turn the main line power ON. The LED over the V/I-2 pot will be illuminated. Adjust the V/I-2 pot until approximately 60% brake lifting voltage is obtained, or if available, the recommended brake holding voltage from the manufacturer.
10. Turn the main line power OFF. Remove the jumper from terminal J1-2 on the brake driver the brake driver and place it a J1-3.
11. Turn the main line power ON. The LED over the V/I-3 pot will be illuminated. Adjust the V/I-3 pot until approximately 40% brake lifting voltage is obtained, or if available, the recommended brake re-level voltage from the manufacturer.
12. Remove the jumper from J1-3 to AC2. Preliminary brake driver setup is complete.

Figure 6.10 Garvac Brake Control

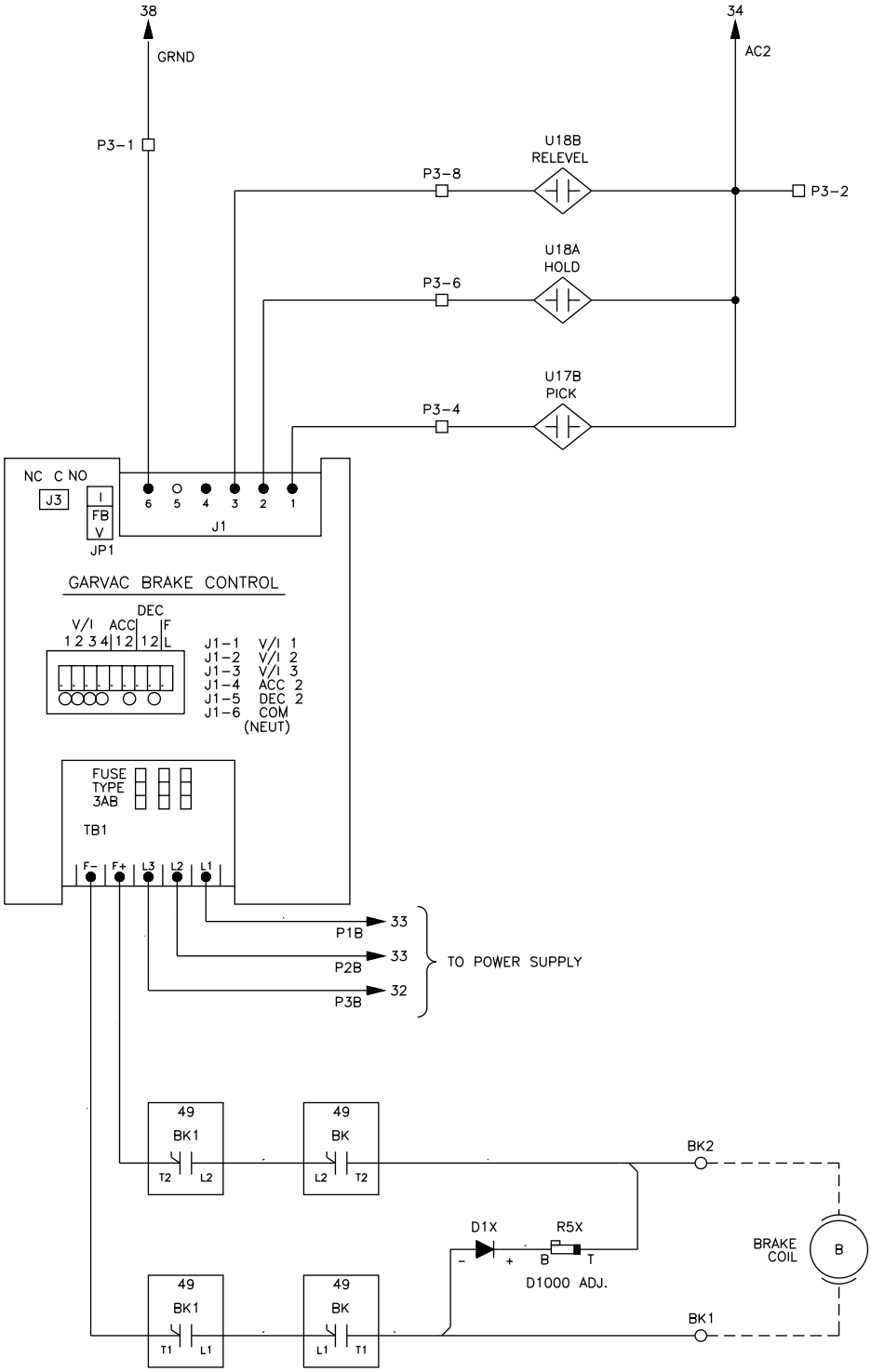

Run the Car

Danger

Have someone standing by the main line disconnect during this procedure in case the car starts to move uncontrollably. If it does, immediately open the disconnect switch.

1. Confirm that controller inspection and door disable switches are both in the down position.
2. Set Inspection speed to 0.0 (zero) feet per minute.
3. LED D55 on the relay board should light and the 'G' relay on the relay board should energize. If not, refer to sheet 4, line 43 of the wiring diagrams to determine why.
4. Attempt to run the car using the inspection switch on the relay board. While holding the toggle up or down, confirm that the 'DL' relay on the relay board energizes. If not, refer to sheet 4, line 45 of the wiring diagrams to determine if the door locks are open.
5. After the 'DL' relay energizes, the 'SR' relay should pick. If not, refer to sheet 4, line 47 of the wiring diagrams to determine why.
6. Release the inspection switch. Set Inspection speed to 10.0 feet per minute.
7. Attempt to run the car up using the inspection switch. Hold the switch up until the car starts to move. If the motor moves in the opposite direction, stop the car. Go to drive parameter LF.28 and change the value to "2" to reverse motor rotation.
8. Monitor the encoder indication on the IntellaNet diagnostics screen. Run the car in the down direction. The speed reference displayed should be negative. Using the inspection switch, run the car in the up direction. The speed reference should be positive. If these values are reversed, set drive LF.28 to 1 to reverse the encoder channels. Check encoder count direction is now correct.
9. Use the inspection switch to run the car. Use a hand tach to check car speed. It should be moving at approximately the same speed as that displayed on the diagnostic LCD. If not, verify that Inspection Speed LF.43 (analog speed control only) and Contract Speed LF.20 are correctly set. For serial speed control, verify that IntellaNet Rated RPM (motor) and Inspection Speed parameters are correctly set. Then, verify motor related drive parameters have been correctly calculated and set. (Auto-tuning the drive to the motor is the recommended procedure.) Finally, verify Traction Sheave Diameter LF.21 and Gear Reduction Ratio LF.22 are correct along with LF.20 and LF.23. With proper parameter settings, the car will be running at the same speed as displayed by the drive and controller.
10. Monitor the brake while running the car to ensure it is operating correctly. If necessary, refer to the preceding brake adjustment instruction.
11. Run the car again and confirm that the car runs correctly in both directions. If vibration is observed in the motor, especially during acceleration and deceleration, decrease the value of the Response parameter in the User Switches A1 menu until the vibration is gone.

The controller is now set up for inspection operation. When you are ready to perform the high-speed adjustment procedure, go to the next topic.

Drive Faults

If a fault occurs in the drive, it will be displayed on the drive. The MPU will reset the drive as long as the RESET / NON RESET switch on the relay board is in the up, or RESET position.

To access fault history, go to 0.LF.98. This is the latest fault record.

To clear fault history, go to 0.LF.98, set it to 10, and press Enter.

Please refer to “Drive Faults” on page 6-29 for a complete list of drive faults.

High Speed Adjustment - F5 Drive

Hoistway Set Up

Caution

Before proceeding with high-speed adjustment, the hoistway switches must be set up properly. Access the top of the car and confirm that:

- The bottom final limit is set to open 6” below the bottom floor.
- The bottom directional limit is set to open 1” above the bottom floor. When the car is sitting floor level at the bottom floor, the limit switch must be open.
- The top directional limit is set to open 1” below the top floor. When the car is sitting floor level at the top floor, the limit switch must be open.
- The top final limit is set to open 6” above the top floor.
- If the car has hoistway access, two additional limit switches are installed in the hoistway. The first is the bottom access zone switch. This switch must be set such that it is closed while the car is floor level at the bottom access floor. It must remain closed until the bottom of the toe guard is level with the top of the hoistway entrance.
- The top access zone switch must be set such that it will be closed while the car is floor level at the top access floor. It must remain closed until the top of the car is level with the sill of the hoistway entrance.

MPU Initial Set Up

1. Press the MPU reset (S1) switch. While the MPU is powering up, a message will be displayed prompting you to press 1 if you want to alter the parameters. Press the 1 key at this time.
2. Refer to Section 9, go through all of the parameter screens. Set all parameters applicable to the job configuration.

Note

Pay no attention to the FLOOR LANDING VALUES at this time. These numbers will mean nothing until a learn trip is completed.

3. Set Maximum Allowed Speed Differential to contract speed. This value will be adjusted later after completing terminal slowdown adjustments.
4. Save values to MPU Non-Volatile memory.The MPU will reset and return to the main screen.
5. Allow the MPU to power up. If communication has been established with the Car Station board and the Car Top Encoder, the diagnostic screen will be displayed. If communication is not established, the following message will be displayed:

   Incompatible LON Software or Car Station Communication Failure. Place Car on Inspection and then Press 2 for Inspection Operation Only.

If this message is displayed, check for power to the Car Station board and check the LON communication network at MPU J1 and Car Station J8.

6. If the MPU cannot establish communication with the Car Top Encoder board the following message will be displayed: “Encoder Communication Failure.”
7. If this message is displayed, check for power to the Car Top Encoder board and check the LON communication network at MPU J1 and Car Top Encoder J8.

The MPU is programmed. Initial relay board setup is complete. A hoistway learn trip must now be performed.

Hoistway Learn

Preparation For Learn Trip

Verify encoder installation is complete:

- Tape and all door magnets installed.
- Stick mounted properly; stick cable connected to encoder electronics box.
- U4 terminal limit wired to encoder processor J3-6. D4 terminal limit wired to J3-1.
- IP & IPX from the controller wired to AJ2-1 & J2-4 on the encoder power supply board.
- IP wire from the controller wired to J3-2 and J3-5 on the encoder processor board.
- Shielded pair Ech-Lon wires connected as follows:
  - From the MPU J1 connector to the Car Top Encoder board J4 connector. Shield wire grounded on the controller end.
  - From the Car Top Encoder board J4 connector to the Car Station board J10 connector with the shield wire tied together at the Encoder end and taped at the Car Station end.
  - NOTE: Wiring of the Ech-Lon communication must be daisy chained, NOT branched out underneath the car.

Performing the Learn Trip

1. Make sure the controller inspection switch is in the down, or INSP position.
2. Move the car level with the bottom floor. Place both car top and in-car inspection switches in the normal position. The learn trip will not initiate unless the car is on automatic operation.
3. Confirm that DOL, EE, and SE inputs are off. The learn trip will not initiate if these inputs are not correct.

Note

If the DCL and DOL inputs are reversed (DOL on and DCL off) and the doors are closed, the parameter DCL/DOL Closed At Limits is not set correctly. Access the Door Parameters menu and change the value of the parameter. Be sure to save the change to non-volatile memory.

4. Open the main line disconnect and leave it open for at least one minute to ensure that any latched fault on the encoder will be cleared before the learn trip is initiated.
5. Close the main line disconnect. While the controller is powering up, press the “1” key on the display card to access parameter menus.
6. Switch the relay board inspection switch to the up or NORM position.
7. On the main menu screen, select Pretorque, Learn Trip and press the “0” key to access the sub-menu.
8. Select Press Enter for Learn trip. Press the “0” key.
9. The car will start the learn trip and move up the hoistway at about 24 fpm. It should stop as soon as it reaches the top floor door zone magnet. After reaching the top, the Display Card will flash “Learn Trip Completed Successfully.” The encoder card non-volatile memory has stored the positions of the magnets in the shaft.
10. The floor values must now be sent from encoder non-volatile memory to the MPU. Go to the Floor Landing Values screen. Select Press Enter for Floor Landing Values from the Encoder. Press “0” to send values to the MPU board.

11. Learn trip values will not take effect until stored to MPU nonvolatile memory. Select Return to Menu. Press “0.”
12. Select Write Values to Non Volatile Memory. Press the “0” key.
13. A dialog will ask if you are sure you want to save the values. With the cursor in front of Yes, press “0.”
14. A message will confirm that values have been saved. Open the main line disconnect and leave it off for at least one minute.

Hoistway learn is complete.

Preliminary Adjustments

1. Place the car in the center of the hoistway. Mark the cables with chalk when the car crosshead and the counterweight crosshead are exactly adjacent to each other.
2. If the controller is not set up for seismic operation, go to step 5.
3. On the monitor, observe the encoder position on the diagnostic screen. Write this value down.
4. Access the car parameters menu. Open the VIP, Medical, Earthquake menu. Program the encoder position recorded in step 3 into the Counterweight Zone parameter. Save to nonvolatile memory.
5. Move the car to a convenient floor. Place 40% of rated capacity in the car.
6. On inspection, run the car so it about 10 feet above the center of the hoistway.
7. Place an Amprobe on one of the leads to the hoist motor.
8. While observing the display on the Amprobe, run the car down through the center of the hoistway. Write down the amperage displayed when the car passes by the chalk mark on the cables. The value may vary slightly. (Make a few passes and average if needed.)
9. Place the car about 10 feet below the center of the hoistway.
10. While observing the display on the Amprobe, run the car up through the center of the hoistway. Write down the amperage displayed when the car passes by the chalk mark on the cables. The value may vary slightly. (Make a few passes and average if needed.)
11. Ignoring whether the recorded values were positive or negative, if the value recorded while the car was running up was greater than the value running down, the car is too heavy. Remove 100 pounds of weight from the car and repeat steps 8 through 10 until the recorded values are equal, but of opposite polarity.
12. Ignoring whether the recorded values were positive or negative, if the value recorded while the car was running down was greater than the value running up, the car is too light. Add 100 pounds of weight from the car and repeat steps 8 through 10 until the recorded values are equal, but of opposite polarity.
13. When the values are equal, but of opposite polarity, the car is balanced. Check how much weight is in the car. It should be between 40 and 50% of rated capacity. If not, the counterweight needs to be adjusted. If the car is too heavy, weight needs to be added to the counterweight to get the car balanced between 40 and 50% of rated capacity. If the car is too light, weight needs to be removed from the counterweight to get it balanced between 40 and 50% of rated capacity.
14. If adjustments are made to the counterweight, repeat steps 10 through 12 until balanced load is in the car. Leave the weights in the car at this time.

High Speed Adjustment

One Floor Up & Down

Using the controller keypad, make a one floor run up and a one floor run down in the middle of the hoistway. Refer to Section 9. Adjust motion parameters to achieve the desired ride. Check for the same speed both up and down.

Note

Stay away from the terminal floors.

Two Floor Up & Down

Using the controller keypad, make a two floor run up and a two floor run down in the middle of the hoistway. Refer to Section 9. Adjust motion parameters to achieve the desired ride. Check for the same speed both up and down.

Note

Stay away from the terminal floors.

Multi-Floor Up & Down

Using the keypad, make a multi-floor run up and a multi-floor run down in the middle of the hoistway. Refer to Section 9. Adjust motion parameters to achieve the desired ride. Continue making multi-floor runs until the system demands contract speed

Note

Stay away from the terminal floors.

The actual speed of the car may not reach contract speed. Do not change any parameters to make the car go contract speed. This will be adjusted next.

High Speed Adjustment - F5

Observe the controller diagnostic screen. Make a high speed run up and down in the middle of the hoistway. KEB parameters LF.20, LF.21, LF.22, and LF.23 determine the maximum serial speed command allowed. The IntellaNet Motor RPM parameter determines the maximum requested speed as an RPM value (KEB parameters determine the maximum allowed RPM).

If the IntellaNet Motor Rated RPM is increased and the maximum car speed does not increase, it is a strong indicator that KEB LF.20/21/22/23 are limiting allowed RPM.

Note

After changing Motor Rated RPM, you must cycle power to the controller to force the Relay board to read the changed value.

The car should now be running at contract speed. Some minor modifications may be necessary to obtain the best ride. If an adaptive tune is required, it must be performed at this time. Please refer to “Auto Tuning and Encoder Data Loading” on page 6-6.

Ride Quality Adjustments

1. Refer to the drive manual section on high speed tuning and system inertial learning.
2. Once the manual procedure is completed, go to Section 8 of this manual and perform a learn procedure for the Terminal Slowdowns.
3. When you are satisfied with the ride quality of the car proceed to Section 9 for the load weigh and pre-torque set up procedures, if so equipped.

Drive Reference Information

The following table lists drive parameters, an explanation of the parameters, and how they should be set. Please refer to "Drive Programming" on page 6-14 for information on setting these parameters.

Table 6.2 TORQMAX F5 Drive Parameters

WARNING: Do not change drive parameters while the elevator is running. Incorrect drive parameters can cause erratic elevator operation. Parameters with an asterisk (*) must be set correctly for your specific motor/machine. Refer to the drive adjustment manual for detailed information.

Display	Parameter Description	Unit	Range	Default	Factory
LF.02	Signal operating mode: AbSpd = Absolute Analog Speed d SPd = Digital speed control A tor = Analog torque control A Spd = Analog speed control SErSP = Serial Com. Speed Control bnSPd = Binary Speed Selection S POS = Serial Position Feedback	-	AbSpd d SPd A tor A Spd SErSP bnSPd S POS	bnSP	SErSP
LF.03	Drive configuration: run = Run mode conF = Configuration (5 minute time limit) Stop = Drive Stopped, Motor cannot run. S Lrn = Activate auto tune I Lrn = Inertia Learn. Learns system inertia. Activates FFTC. P Lrn = Pole Learn. PM motor pole positions. SPI - Learns absolute encoder position for PM motor without sheave movement OStST - Allows car to overspeed for one run without changing drive parameters	-	run conF Stop S Lrn I Lrn P Lrn	conF	run
LF.04	Motor selection: Displays mode selected using US.4 and US.10	-	Read only. See US.10	-	***
LF.05	Drive fault auto reset	1	0-10	5	5
LF.08	Electronic motor overload protection	-	on/off	off	on
LF.09	Electronic overload current: PM- Not visible, auto set same as LF.12.	A	1.0 - 110% Rtd	8.0	*_____
LF.10	Rated motor power PM- Read only, auto calc.	HP	0.00 - 125.00	5.0	IM*_____
LF.11	Rated motor speed	rpm	10.0-6000	1165 or 150	*_____
LF.12	Rated motor current	A	1.0 - 110% Drive rated	8.0	*_____
LF.13	Rated motor frequency	Hz	4.0 - 100.0	60.0	*_____
LF.14	Rated motor voltage IM - Name plate rated voltage (120 - 500V) PM - No-load, phase-to-phase back EMF rms voltage LF.11 (1 - 32000V/krpm)	V	-	230/460	*_____
LF.15	IM: Power factor, PM: not visible	1	0.50 - 1.00	0.90	0.90
LF.16	IM: Field weakening speed PM - not visible	rpm	0.0-6000.0	set @ 80%of LF.11	*_____
LF.17	Rated motor torque, IM- Read only, auto calc. PM- enter motor name plate torque	lb ft	1 - 10000	IM - calc PM - 18	IM *** PM*_____
LF.18	PM: Motor stator resistance - from data sheet or perform learn procedure (see F5 Drive manual) IM: not visible	ohms	0.0-49.999	49.999	PM*_____

Table 6.2 TORQMAX F5 Drive Parameters

Display	Parameter Description	Unit	Range	Default	Factory
LF.19	PM: Motor leakage inductance - from data sheet or learn procedure (see F5 Drive manual) IM: not visible	mH	0.1 - 500.0	1.00	PM*_____
LF.20	Contract Speed	fpm	0 - 1600	0	*_____
LF.21	Traction sheave diameter (measured value)	inch	7.0 - 80.0	24.00	*_____
LF.22	Gear reduction ratio (setting here must be equal to or greater than the estimated ratio displayed at LF.25)	1	1.00-99.99	30.00	*_____
LF.23	Roping ratio	1	1 - 8	1	*_____
LF.24	Load weight	lbs	0 - 30000	0	*_____
LF.25	Estimated gear ratio (Read only, auto calculated) This display-only value is calculated from drive LF.11, LF.20, LF.21, and LF.23 settings. Changes to those values will be reflected here. LF22 must be set to a value equal to or greater than that displayed here.	.01	1.00 - 99.99	calculated	***
0.LF.26	Encoder Interface: Displays feedback type		-	-	***
LF.27	Encoder pulse number For IncIE and SinCo see customer data For HIPEr set to 1024 For EndAt set to 2048	ppr	256 - 16834	1024	
LF.28	Encoder channel swap / direction 0 nothing reversed 1 encoder A<->B swapped 2 motor rotation reversed 3 motor rotation reversed and A<->B swapped	1	0 - 3	0	*_____
LF.29	Encoder sample time (recommend gearless = 4, geared = 8)	mSec	0.5 - 32	4	4 or 8 *_____
LF.30	Control mode: 0, 1 = Open loop induction motor operation 2 = Closed loop speed control (LF. 2 = A Spd) 3 = Closed loop speed control with pre-torque 4 = Closed loop torque control (LF. 2 = A tor) 5 = Closed loop speed control with synthesized pre-torque	1	0 - 5	0	*_____
A.LF.31	Kp speed accell: Proportional gain, accel & run	1	1 - 50396	3000	** 3000
d.LF.31	Kp speed decell: Proportional gain, decel	1	1 - 50396	3000	** 3000
P.LF.31	KP speed torque (Synth. Pretorque	1	1 - 50396	2000	2000
A.LF.32	Ki speed accell: Integral gain, accel & run	1	1 - 26214	350	** 350
d.LF.32	Ki speed decell: Integral gain, decel	1	1 - 26214	250	** 250
P.LF.32	Ki speed torque (Synth. Pretorque)	1	1 - 26214	10000	10000
A.LF.33	Ki speed offset accell: Gain at low speed, accel	1	0 - 8000	3000	** 3000
d.LF.33	Ki speed offset decell: Gain at low speed, decel	1	0 - 8000	1000	** 1000
0.LF.36	Maximum torque (auto calculated by the drive)	lb.ft.	0-500% Trtd	calculated	***
1.LF.36	Maximum torque emergency operation (= LF.17)	lb.ft.	0-500% Trtd	calculated	***
LF.37	Open loop torque boost: Open loop op. only	%	0-25.5	5.0	5.0
LF.38	Carrier frequency; 0= 8 KHz, 1= 16KHz (**Note: set LF.38 = 0 if E.OL2 error on drive**)	1	0, 1	0	*_____
LF.41	Leveling speed (Not used, must be set to 0)	fpm			0.0

Table 6.2 TORQMAX F5 Drive Parameters

Display	Parameter Description	Unit	Range	Default	Factory
LF.42	High speed (Not used, must be set to 0)	fpm			*_____
LF.43	Inspection speed (Not used, must be set to 0)	fpm			0.0
LF.44	High leveling speed (Not used, must be set to 0)	fpm			0.0
LF.45	Earthquake speed (Not used, must be set to 0)	fpm			0.0
LF.46	Emerg. power Speed (Not used, must be set to 0)	fpm			0.0
LF.47	Intermediate speed (Not used, must be set to 0)	fpm			0.0
LF.49	Overspeed Test: Speed setting for overspeed test function (see LF.03)	fpm	1 - 2400	100	100
0.LF.50	Profile 0 - Starting jerk (Not used)	ft/s^3			Off
0.LF.51	Profile 0 - Acceleration (Not used)	ft/s^2			Off
0.LF.52	Profile 0 - Deceleration jerk (Not used)	ft/s^3			Off
0.LF.53	Profile 0 - Deceleration jerk (Not used)	ft/s^2			Off
0.LF.54	Profile 0 - Deceleration jerk (Not used)	ft/s^3			Off
0.LF.55	Profile 0 - Approach jerk (Not used)	ft/s^3			Off
1.LF.50	Profile 1 - Starting jerk (Not used)	ft/s^3			Off
1.LF.51	Profile 1 - Acceleration (Not used)	ft/s^2			Off
1.LF.52	Profile 1 - Deceleration jerk (Not used)	ft/s^3			Off
1.LF.53	Profile 1 - Deceleration jerk (Not used)	ft/s^2			Off
1.LF.54	Profile 1 - Deceleration jerk (Not used)	ft/s^3			Off
1.LF.55	Profile 1 - Approach jerk (Not used)	ft/s^3			Off
2.LF.50	Profile 2 - Starting jerk (Not used)	ft/s^3			Off
2.LF.51	Profile 2 - Acceleration (Not used)	ft/s^2			Off
2.LF.52	Profile 2 - Deceleration jerk (Not used)	ft/s^3			Off
2.LF.53	Profile 2 - Deceleration jerk (Not used)	ft/s^2			Off
2.LF.54	Profile 2 - Deceleration jerk (Not used)	ft/s^3			Off
2.LF.55	Profile 2 - Approach jerk (Not used)	ft/s^3			Off
LF.56	Stop jerk (Not used)	ft/s^3			Off
LF.57	Speed following error (0 = off, 1 = on)	-	off, on	on	on
LF.58	Speed difference	%	0 - 30	10	10
LF.59	Trigger time speed difference: Following error timer	sec	0.0 -1.0	1.0	1.0
LF.61	Emergency operation mode	-		off	off
LF.67	Pretorque gain	-	0.25 - 2.00	1.00	1.00
LF.68	Pretorque offset	%	-100 - 100	0.00	0.00
LF.69	Pretorque direction (-1 = -V, 1 = +V)	1	-1, 1	1	1
LF.70	Speed pick delay (Delay to turn on DRO).	sec	0.00 - 3.00	0.30	0.30
LF.71	Brake pick delay	sec	0.0 - 3.0	0.05	0.05
LF.76	Encoder resolution multiplier 2 for incremental encoder 8 for Sin/Cos, EnDat or Hiperface encoder	1	0 - 13	2	
LF.77	Absolute encoder position (measured)	1	0 - 65535h	0	0
LF.78	Brake drop delay: Time motor will hold full current and control after direction inputs drop.	sec	0.0-3.00	0.50	0.50
LF.79	Current hold time: Delay in turning off the drive (Delay to turn OFF the motor current after the direction is dropped and LF.78 has expired)	sec	0.300 - 3.000	0.300	0.30 - 0.80

Table 6.2 TORQMAX F5 Drive Parameters

Display	Parameter Description	Unit	Range	Default	Factory
Diagnostic Parameters (Read only)					
LF.25	Estimated gear ratio	1			
LF.80	Software version				
LF.81	Software date		MMDD.Y		
LF.82	X2A-input state		see tables in F5 Drive Manual		
LF.83	X2A-output state				
LF.86	Operational mode				
LF.87	Actual inverter load (100% = rated load)	%			
LF.88	Motor command speed	rpm			
LF.89	Actual motor speed	rpm			
LF.90	Actual elevator speed	ft/m			
LF.93	Phase current	A			
LF.94	Peak phase current	A			
LF.95	Actual DC voltage	V			
LF.96	Peak DC Voltage	V			
LF.97	Actual output frequency	Hz			
O.LF.98	Last error				
US - Parameters					
US. 1	Password: With different passwords, different parameter groups can be accessed for advanced programming.	-	0-9999	-	-
US. 3	Load defaults. Select LoAd and press ENTER to cause all LF parameters to be reset to drive default values.	-	LoAd	-	-
US. 4	Load configuration. Select LoAd and press ENTER to load the configuration selected in US.10.	-	LoAd	-	-
US.10	Select Configuration. User selection of drive mode. I CLSd= Induction motor (closed loop) I 9LSS= Induction motor (closed loop) gearless P CLSd= Synchronous motor (closed loop) P 9LSS= Synchronous motor (closed loop) gearless **Loaded using parameter US.04**.	-	ICLSd I 9LSS P CLSd P 9LSS	-	* _____
US.34	Analog Pattern Gain		0.01-20.0	1.0	
US.35	Reference splitting: This parameter creates a transitional curve between two serially transferred successive speed values, smoothing out the changes between the two.	mS	0 - 200 mSec	0	40

* Parameters are motor/machine/job dependent.
** Recommended but field adjustable.
*** The value is automatically calculated from the motor data or other parameter values.

Parameters for Drive Software Version (LF.80 = 1.71 or greater), Software date (LF.81 = 704.0 or later)

Drive Faults

The following table lists detected drive faults, along with a description and corrective action.

Table 6.3 Drive Faults

Display	Description	
E UP	DC bus undervoltage. Input is single-phasing or phase imbalance greater than 2%.	Input voltage low or unstable Input wiring wrong Isolation transformer sized incorrectly Isolation transformer connected wrong One phase of input missing Phase imbalance >2%
E OP	DC bus voltage too high	Input voltage too high Voltage spikes on the line Braking resistor problem (regen) Inverter poorly grounded
E OC	Peak output current exceeded or ground fault	Motor lead short Ground fault on motor leads Motor contactor damaged Inverter poorly grounded Incorrect motor data Shorted output transistor
E OL	Time dependent overload. See drive manual	Motor wired wrong Motor data wrong Inverter too small Excessive mechanical load * Cannot be reset until EnOL displayed
EOL2	Time dependent overload at low speed. See drive manual	High stand-still motor current - reduce drive switching frequency, see US.16 Motor data wrong Inverter too small Excessive mechanical load Motor wired wrong
EnOL	Drive has cooled down after EOL or EOL2 error	
EOH	Heat sink too hot (view at ru.38)	Insufficient cooling Ambient temperature too high Fan broken, see US.37 Reduce carrier frequency
EnOH	Over temperature reset now possible	Temp has dropped to safe level
EdOH	Motor temp sensor tripped	Overheated motor
E 05	Over speed error	Speed >110% of LF.20 Verify motor data Verify encoder position LF.77 Noise on encoder cable If PM, check LF.14
ELSF	Visible during power up, clears after proper initialization	Input voltage wrong Braking resistor connection wrong Bad braking transistor
EEnC I	Signal loss or wrong rotation during absolute position search	See drive manual
EEnCC	Serial comm problem or encoder signal problem	See 2.LF.26 diagnostics. Must be reset through 0.LF.26
EPuC I	Power unit. Power stage not identified during initialization	Potential bad drive

Table 6.3 Drive Faults

Display	Description	
EPuCH	Current check error prior to run. Possible due to exchanging control cards in the drive.	If drive does not clear error, clear manually through US.27
Ebr	Brake current check error prior to run	One or more leads disconnected Bad motor contactor Damaged motor winding
EEF	Fault triggered from option input X2A.10	See LF.57
Ehyb	Feedback card error	Replace card
EOH2	Motor overload protection activated	Excessive motor current (LF.9, LF.12) Mechanical loading problems Incorrect motor data settings
EbuS	Serial comm problem between keypad and drive	See drive manual
bbL	Precedes most faults. May occur if drive enable is turned off while car is running.	Output transistors safely shut off and blocked from operation.
no Pu	Power stage not ready	Potential bad drive
ECdd	Drive could not learn motor data	Occurs if motor tuning fails. Make note of any error being displayed just before this and troubleshoot.

Quick Topics

- In This Section
- Controller Power Up
- Motor Generator Start Up
- Hoist Motor Adjustment
- Regulator Start Up
- Brake Adjustment
- Run the Car
- Adjustment Preparation
- Hoistway Learn
- Preliminary Adjustment
- High Speed Adjustment
- Regulator Adjustment
- Ride Quality
- Reference Information

Amicon Regulator

In This Section

This section describes power up and adjustment instructions for the IntellaNet controller system using the Amicon Regulator.

Before beginning this procedure:

- Read Sections 1 and 2 completely.
- Read this section completely.

Danger

Elevator control products must be installed by experienced field personnel. This manual does not address code requirements. The field personnel must know all the rules and regulations pertaining to the safe installation and running of elevators.

Controller Power Up

Danger

The following procedures are to be performed with the power off the controller. Do not apply power to the controller until instructed to do so.

1. Locate sheet 3 of the wiring diagrams supplied with the controller. At the top of the page you will see the main line disconnect voltage. Verify that the main line voltage listed on the wiring diagrams matches that which is supplied by the building. If not, contact MCE Technical Support before proceeding.
2. Refer to Figure 6.1. Use an ohmmeter to check continuity between relay board terminals GOV1 and STP (safety circuit). If there is no continuity, refer to sheet 4 of the wiring diagrams and troubleshoot to find the open.
3. With the meter on terminals GOV1 and STP, open each device in the safety circuit one at a time and confirm that each device will open the safety circuit when actuated. Remove the meter from the relay board.
4. Open the governor switch.

Figure 7.1 Safety Circuit and Locks

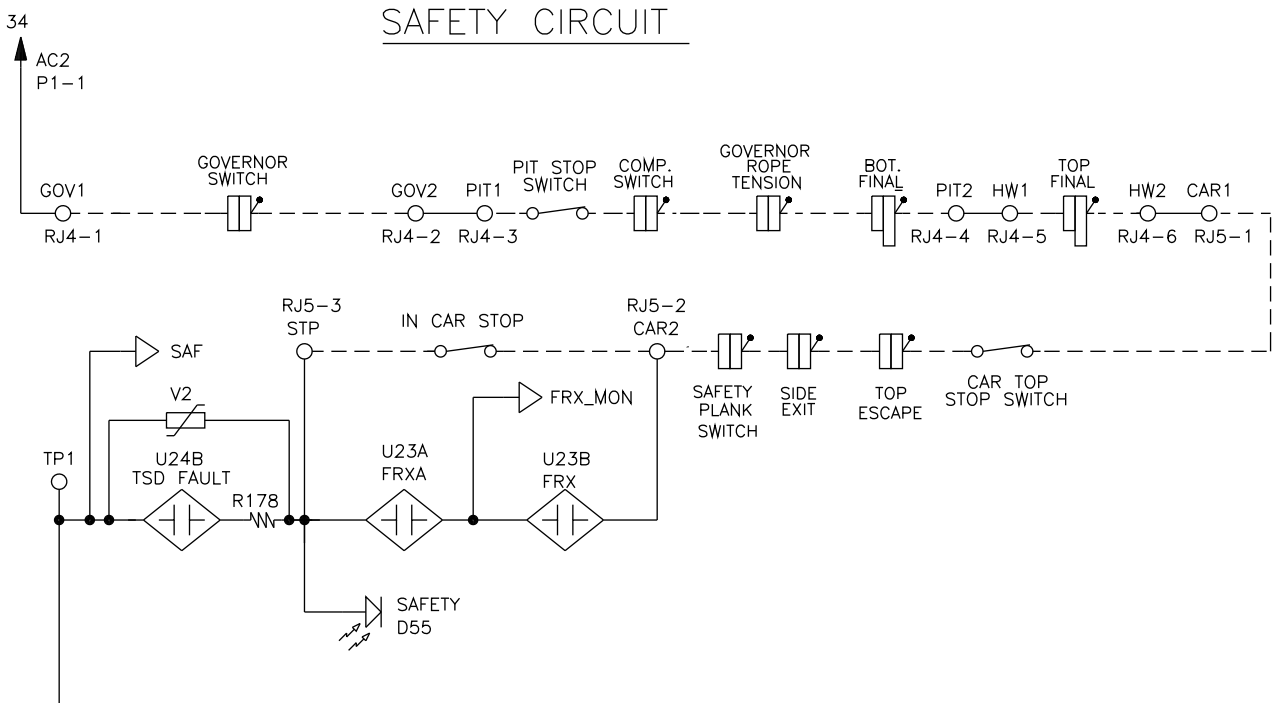

5. Refer to Figure 6.2. Use an ohmmeter to check continuity between relay board terminals G1 and G2 (car gate switch). If there is no continuity refer to sheet 4 of the wiring diagrams and troubleshoot to find the open.
6. With the meter still on terminals G1 and G2, open the gate switch on the car and confirm that opening the switch opens the car gate circuit.

Figure 7.2 G1 and G2 Terminals (Car Gate Circuit)

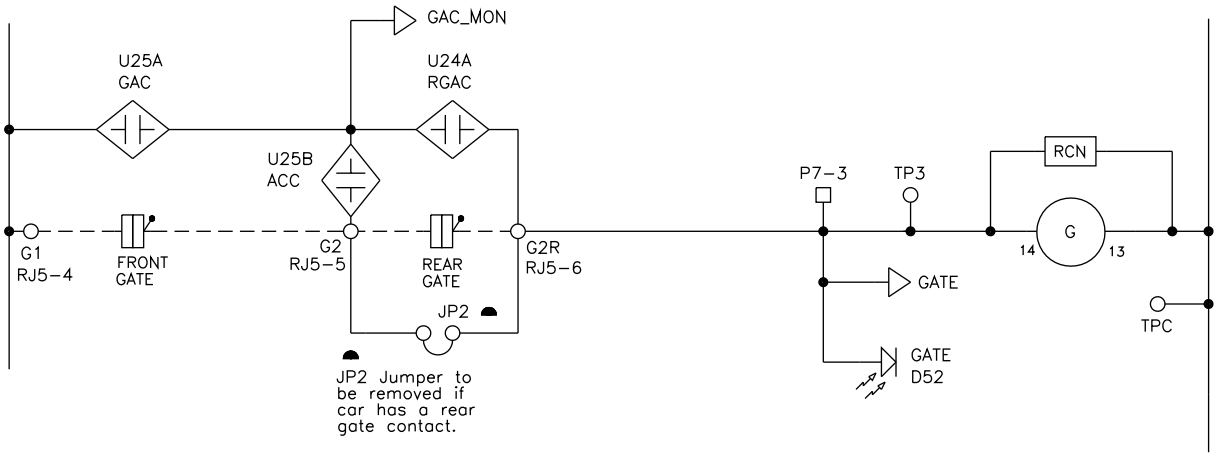

7. If there is no rear door on the car go to step 10. If there is a rear door go to step 6.
8. Using the ohmmeter, check continuity between relay board terminals G2 and G2R (rear car gate switch). If there is no continuity refer to sheet 4 of the wiring diagrams and troubleshoot to find the open.
9. With the meter still on terminals G2 and G2R, open the rear gate switch on the car and confirm that opening the switch opens the rear car gate circuit.
10. If there is no rear door on the car install a permanent jumper between relay board terminals G2 and G2R.
11. Refer to Figure 6.3. Use an ohmmeter to check for continuity between relay board terminals L1 and L3A (door locks). If there is no continuity refer to sheet 4 of the wiring diagrams and troubleshoot to find the open.

Figure 7.3 Relay Board Terminals L1 and L3A (Door Locks)

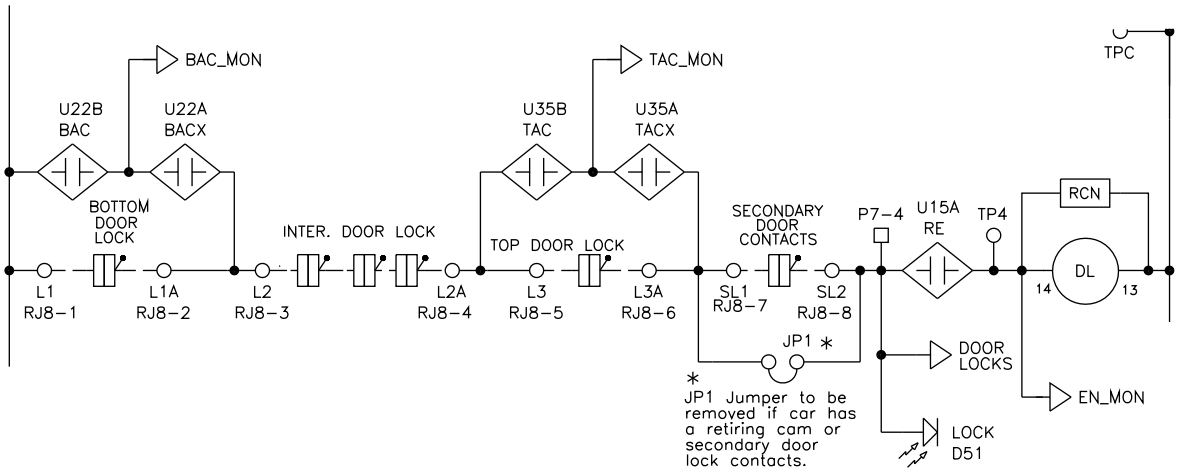

12. With the meter still on terminals L1 and L3A, verify that opening any door lock will open the circuit. Test all locks individually and confirm that any lock opens the lock circuit.
13. If this car has seismic service go to step 14. If not, go to step 18.
14. Locate sheet 5 of the wiring diagrams. Refer to Figure 6.4 below and the wiring diagrams. Place an ohmmeter from relay board terminal AC2 to terminal CTOP. If the car top inspection switch is in the automatic position, there should be continuity. If not, check the switch and wiring and correct as necessary.

Figure 7.4 Relay Board Terminals AC2 to CTOP

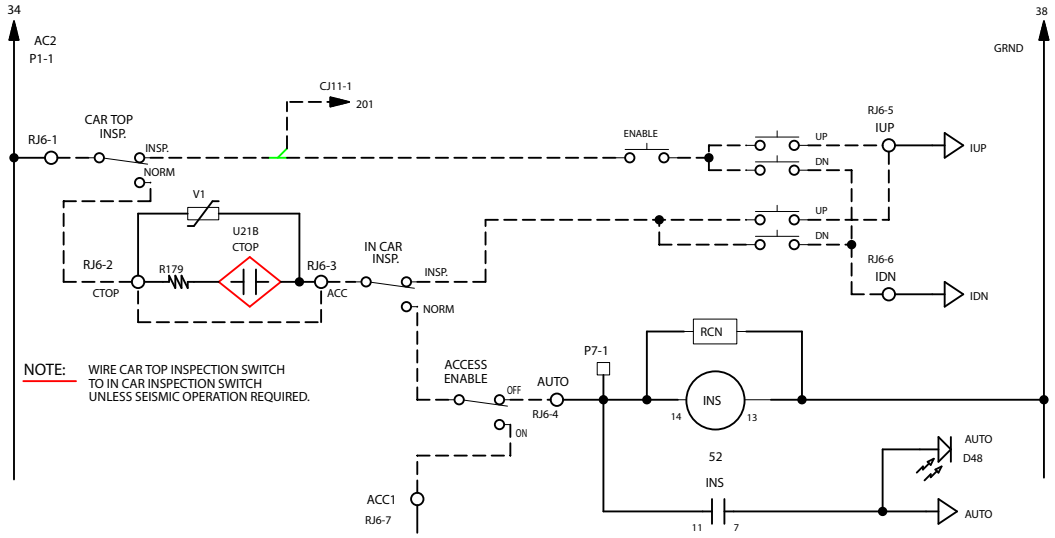

15. Confirm that placing the switch in the inspection position opens the circuit. Place the switch in the automatic position for initial power up.
16. Place an ohmmeter from relay board terminal ACC to terminal AUTO. If the in-car inspection switch is in the automatic position, there should be continuity. If not, check the switch and wiring and correct as necessary.
17. Confirm that placing the switch in the inspection position opens the circuit. Place the switch in the automatic position for initial power up.

18. Locate sheet 5 of the wiring diagrams. Refer to the wiring diagrams and Figure 6.4. Place an ohmmeter from relay board terminals AC2 to AUTO. If the car top inspection switch and the in-car inspection switches are in the automatic position, there should be continuity. If not, check the switches and wiring and correct as necessary.
19. Confirm that placing either switch in the inspection position opens the circuit. Place both switches in the automatic position for initial power up.
20. Refer to sheet 5, line 55 of the wiring diagrams. Use an ohmmeter to check continuity between relay board terminals UN1 and UN2 (up normal limit). Confirm that the switch is closed when the car is away from the top floor. It must be set to open 1" below the top floor and stay open through the entire stroke of the buffer.
21. Refer to sheet 5, line 55 of the wiring diagrams. Use an ohmmeter to check continuity between relay board terminals DN1 and DN2 (down normal limit). Confirm that the switch is closed when the car is away from the bottom floor. It must be set to open 1" above the bottom floor and stay open through the entire stroke of the buffer.
22. Place the inspection switch on the relay board in the down, or inspection position.
23. Place "Door Disable" switch on the relay board in the down, or disable position.

Danger

Have someone stand by the disconnect switch the first time power is applied to the controller. If the car starts to move or any other dangerous condition is noted, immediately remove power.

24. Apply power to the controller.

Danger

The controller now has power applied. Some of the following procedures are performed with power on. Use extreme caution and observe all appropriate safety precautions.

25. Phase sequence failure may appear on the reverse phase monitor. If so, check the phase-to-phase voltage to see if one or more of the fuses are blown. If all fuses are intact, shut the main line power off and swap two of the three incoming feeds to the controller. The reverse phase monitor is OK if the red light is on.
26. While the controller is powering up, there will be a message on the display card prompting you to press "1" to alter the parameters. Press "1" on the keypad to access the parameter menus at this time.
27. Using the keypad, press the "#" key until the cursor (the flashing square) is in front of Miscellaneous Parameters. Press the "0" key.
28. Using the "#" key, move the cursor down to Inspection Speed. Set to 10% of contract speed.

Note

If the contract speed of the car is greater than 500 feet per minute, set the inspection speed to 5% of contract speed.

29. Select Main Contactor Hold Time. Set to 10 (1 second).

Note

If the brake is sluggish, set Main Contactor Hold Time to a larger value. This parameter controls how long the drive stays enabled after a stop is demanded. Setting it too short will cause the car to roll before the brake sets fully on stop.

30. Select Return. Press the “0” key to return to the main menu.
31. Select Motion Parameters. Press “0” to access the menu.
32. Set Max Speed to the contract speed of the car.
33. Select Return. Press the “0” key to return to the main menu.
34. Select Learn, Limits, Floor Names, Pretorque. Press the “0” key.
35. Select Press Enter to Disable Limit Section. Press the “0” key. The message “Limit Section of Relay Card Disabled! Section Disabled Until Relearned!” will appear.
    Press any key on the keypad to return to the previous sub-menu.
36. Select Return to Main Menu. Press the “0” key.
37. Select Write Values to Non Volatile Memory. Press the “0” key.
38. A dialog box will ask if you are sure you want to save the values. With the cursor in front of Yes, press “0.”
39. A message will confirm that the values are saved. Exit the menu system by pressing the reset button (S1) on the MPU.
40. While powering up, the MPU board establishes communication with the Car Top Encoder and the Car Station board. If these devices are not connected, the following message will appear: “Incompatible LON Software or Car Station Communication Failure. Place Car on Inspection and then press 2 for Inspection Operation Only.”
41. Make sure the inspection switch on the relay board is set to INSP. Press the “2” key and the diagnostic screen will appear.

Initial relay board setup is complete. The brake driver must now be programmed.

Motor Generator Start Up

1. Momentarily close the MG switch on the relay board. Open the MG switch as soon as the generator begins to rotate. Note the direction of generator rotation. If the generator rotated in the proper direction as noted on the plate on the generator frame, move on to step 5. If the direction is incorrect, shut off main line power, then reverse any two of the three phases to the MG.
2. Connect a DC voltmeter across the generator armature.

The next two steps MUST be done together. If loop voltage builds too high, the car may drive through the brake if you do not pay close attention to the meter while performing the next two steps.

3. Start the generator and insure that the generator transfers from wye to delta properly if using a wye delta system. If using a resistance start, make sure there is adequate time before transfer. If the transfer time is not adequate on wye delta systems, adjust the start - run timer in the MPU parameter to allow adequate time. If the time is inadequate for resistance start systems, check the resistor grid wiring.
4. With the generator running, note the meter reading of the armature. If there is any voltage on the meter above 10 VDC, shut off the generator immediately. This may indicate the suicide circuit connections may be reversed.

Danger

A build up of loop voltage will move the car in one direction or the other without direction relays energized. Another cause of loop voltage build-up may be excessive series field turns. Verify that the series fields are disconnected.

Note

If a build up of loop voltage was seen, shut the main line power off and wait at least 5 minutes, then reverse the generator shunt field connections at the controller. Repeat step 8 and make sure that there is no build up of loop voltage.

There are many different generator field configurations. It is the responsibility of the installer to choose the best field winding configuration for the application. In some cases, leveling fields will need to be wired in parallel with the main fields to yield enough loop voltage to achieve contract speed.

5. With the meter on the Generator Armature, push in the ‘PS’ relay. If the voltage on the meter rises +1.00 VDC, the neutral is OFF. Adjust the neutral of the MG and repeat.

Initial Hoist Motor Field Adjustment

Note

The following settings will need to be touched up during high-speed adjustment.

- We refer to Standing Field as the field current when the car is sitting at the floor with the doors fully open or when it is parked.
- We refer to Full Field as the field current when the car is accelerating or leveling into the floor.
- We refer to Run Field as the field current required to allow the car to reach contract speed without exceeding the rated armature voltage and current by more than 10% while lifting full load.

1. Insure the motor fields have been connected properly to the controller.
2. Connect a meter in line with the F+ terminal or an amp-probe around the F+ wire of the motor field driver. The meter or amp probe should be large enough to handle the amount of current the unit can supply. Unit ranges are 10, 20, and 30 amps.
3. With no inputs on at the J1 terminal of the driver, the V/I-4 pot will be selected. Adjust the V/I-4 pot until standing field current is obtained.
4. Next, set the field loss trip point.

Note

The field loss trip point is typically set at 80% of standing field current. (For example, if the standing field current is 10 amps, the field loss should be set to trip at 8 amps).

5. Calculate the field loss trip point for the job (standing Field Times 0.8).
6. Adjust pot V/I-4 for the proper field loss trip point.
7. If the REG input to the relay board goes off while decreasing the V\I-4 setting, continue to adjust the V/I-4 pot until the desired trip level is seen on the meter or amp-probe and then turn the FL pot counterclockwise until the REG input just turns on.
8. If the REG input remained on while decreasing the V\I-4 setting, slowly begin turning the FL pot clockwise until the REG input goes off. Turn the FL pot counter-clockwise until the REG input turns back on.
9. Set V\I-4 back up to the desired standing field current level.
10. Turn main line power OFF. Temporarily jump from AC2 on the controller to J1-1 on the motor field driver.
11. Turn main line power ON. Adjust the V/I-1 pot until full field current is obtained.
12. Turn main line power OFF. Move the jumper connected to J1-1 to J1-2 on the motor field driver.
13. Turn main line power ON. Adjust the V/I-2 pot until run field current is obtained. This setting will need to be adjusted again with the car running at contract speed with full load.

Note

Field weakening and strengthening points are set by parameters in the Motion Parameters menu on the IntellaNet MPU. These are typically set to 70% (ACCEL) and 90% (DECEL) of contract speed.

14. Turn main line power OFF. Remove the jumper from the J1-2 terminal. When power is turned back on, you will touch this jumper to the J1-2 terminal again to adjust the acceleration rate of the motor field driver.
15. Turn main line power ON. While observing the meter, touch the jumper to the J1-2 terminal. Turn the ACC1 pot such that switching from standing current level to full field current level takes between 2 to 2.5 seconds.
16. Remove the jumper from the J1-2 terminal. Turn the DEC1 pot such that switching from full field current level to standing current level takes between 2 - 2.5 seconds.
17. Turn main line power OFF.

Figure 7.5 Hoist Motor Field

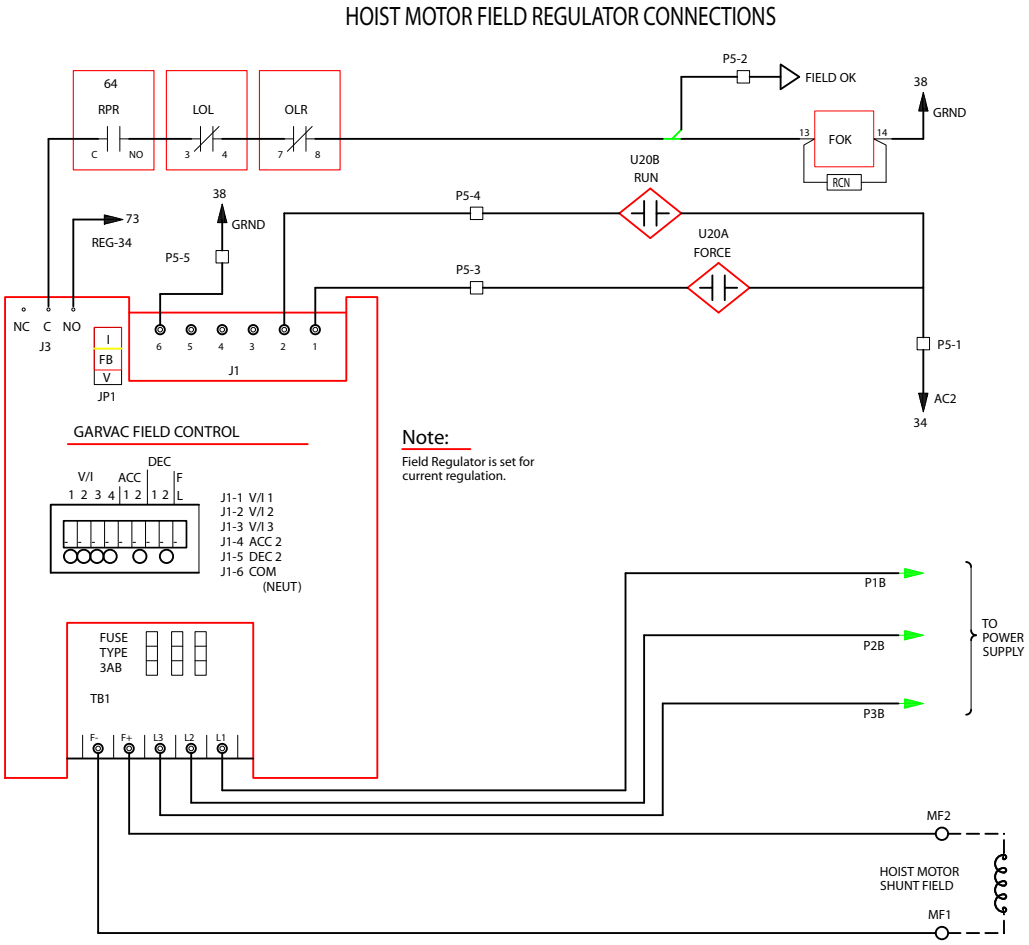

Amicon Regulator Start Up

Note

All potentiometers on the regulator board were preset during testing. Minor adjustments will need to be made as follows.

1. Temporarily place a jumper from the XY3 pin to the XY9 pin on the regulator.
2. Connect the meter between terminals XY3 and XY4 on the regulator board with the red meter lead on terminal XY4.
3. Run the car up. If the car runs down, shut main line power off and swap the F+ and F- connections on the hoist motor field regulator. The car should now run up when the up relays are energized and down when the down relays are energized.
4. Connect your meter to check the polarity of the tach feedback. Place the red lead of the meter on the XY5 test point on the regulator and the black meter lead on the XY3 test point on the regulator board.
5. As the car runs up, the polarity on the meter should be positive for up running, and negative for down running. If it is reversed, stop the car and swap the tach connections at terminals 1 & 2 on the regulator board.
6. Move the red meter lead to the XY6 test point. Run the car up. The polarity on the meter should be negative in the up direction and positive in the down direction. If it is reversed, stop the car and swap the A+ and A- connections on the regulator power board.

Danger

The S3 switch must be in the RUN position when the car is placed on automatic. If the switch is on TEST, tach feedback is ignored and the regulator will output constant voltage. Speed will vary, depending on load.

7. Calculate the raw tach voltage at contract speed using the following formulas:
   - Gearless: Tach RPM @ contract Speed = Circumference of Drive Sheave X Nameplate RPM of Motor Circumference of Tach Wheel
     Where: Circumference = 3.1416 X the diameter Tach RPM @ contract speed X 0.10 = Tach Volts @ Contract Speed
   - Geared: Nameplate RPM of Motor X 0.10 = Tach Volts @ Contract Speed
     Where: Tach Generator is directly coupled to the hoist motor shaft.
8. Perform rough tach scaling by switching the SW1 switches on the regulator board using the following table:

Tach Volts @ Contract Speed	SW1 Switch Settings
5 - 10 volts	SW1 - SW8 = ON
10 - 18 volts	SW1 - SW7 = ON
18 - 35 volts	SW1 - SW6 = ON
65 - 110 volts	SW1 - SW4 = ON
110 - 180 volts	SW1, SW2 = ON
180 - 300 volts	SW1 - SW8 = ON

9. Hand tach the car to see if it is running at 1/10 of contract speed.

Note

If the contract speed of the car is greater than 500 feet per minute, the inspection speed parameter was previously set to 5% of contract speed. Continue with the adjustment but perform the following step to obtain 5% of contract speed.

10. If the car is running too slow, turn the NMAX pot clockwise until the car runs 1/10 of contract speed. If the car is running too fast, turn the pot counterclockwise.

Note

If the car is running less than 1/10 of contract speed in both directions with the NMAX pot fully clockwise, it will be necessary to move the dip switches to the next higher range in the table.

11. Move the red meter lead to the XY6 test point on the regulator. While the car runs at 1/10 of contract speed, adjust the ACAL pot until you see 0.75 volts on the meter (.38 if the inspection speed was set to 5% of contract speed).
12. If instability exists, make note of the original setting of the pot and turn the PN pot clockwise 1/4 turn at a time. If this seems to make the instability worse, go back to the original setting of PN and begin to turn the ACMP pot clockwise 1/4 turn at a time.
13. Move the red meter lead to the XY5 test point. While the car is running at 1/10 of contract speed, adjust the TFB pot until 0.7 volts is seen on the meter (.35 if the inspection speed was set to 5% of contract speed).

Note

The TFB pot has no effect on speed regulation. This setting is only used for overspeed detection purposes.

14. Move the red meter lead to the XY7 test point. With the car stopped and the doors closed, adjust the OVS pot for approximately 7.8 volts.
15. Remove the temporary jumper from XY3 to the XY9 of the regulator board.

Initial regulator setup is complete. It may need to be fine tuned later but these adjustments should be sufficient to get the car to run at high speed. The brake driver must now be adjusted.

Brake Adjustment

Note

The brake assembly and all pins should be cleaned thoroughly and all spring tensions set properly to hold 125% of car capacity prior to adjusting the brake driver. Brake shoes should be checked to insure at least 95% surface contact. If spring tensions are changed after this adjustment, the brake driver will need to be completely re-adjusted.

1. Refer to Figure 7.6. Make sure the brake coil has been connected properly to the controller.
2. Connect a meter across the F- and F+ terminals of the brake driver. Set the meter range high enough to measure the brake lifting voltage level for the job.
3. With no inputs on at the J1 terminal of the brake driver, the V/I-4 pot will be selected. Adjust the V/I-4 pot fully counterclockwise.
4. Turn the ACC1 pot fully clockwise. This allows rapid response of the brake regulator from a lower to a higher voltage level.
5. Turn the DEC1 pot fully clockwise. This allows rapid response of the brake regulator from a higher to a lower voltage level. This will also help prevent excessive arcing on the contacts of the BK relay.
6. Turn main line power OFF. TEMPORARILY place a jumper from J1-1 on the brake driver to AC2 on the controller terminal block.
7. Turn main line power ON. Adjust the V/I-1 pot until brake pick voltage required for the job is obtained.
8. Turn main line power OFF. Remove the jumper from terminal J1-1 on the brake driver and place it at J1-2.
9. Turn main line power ON. The LED over the V/I-2 pot will be illuminated. Adjust the V/I-2 pot until approximately 60% brake lifting voltage is obtained, or if available, the recommended brake holding voltage from the manufacturer.
10. Turn main line power OFF. Remove the jumper from terminal J1-2 on the brake driver and place it at J1-3.
11. Turn main line power ON. The LED over the V/I-3 pot will be illuminated. Adjust the V/I-3 pot until approximately 40% brake lifting voltage is obtained, or if available, the recommended brake re-level voltage from the manufacturer.
12. Remove the jumper from J1-3 to AC2.

Preliminary brake driver setup is now complete.

Figure 7.6 Garvac Brake Control

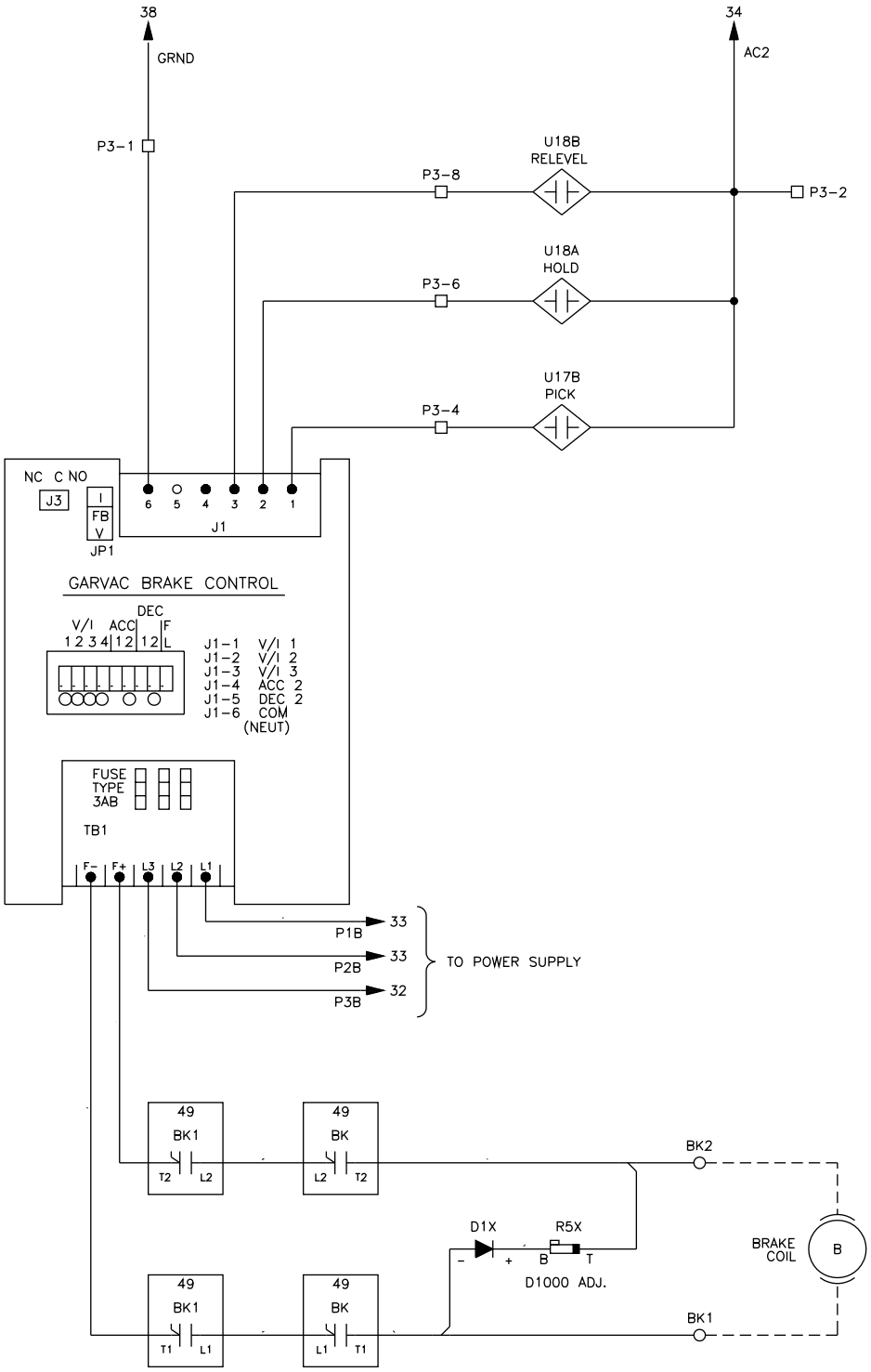

Run the Car

Danger

Have someone standing by the main line disconnect during this procedure in case the car starts to move uncontrollably. If it does, immediately open the disconnect switch.

1. Confirm that the inspection switch and the door disable switch on the relay board are both in the down position.
2. Remove power from the controller.
3. Refer to sheet 4, line 48 of the wiring diagrams. Remove the wire from relay board plug connector P2-2 that is wired to the 'P' relay coil.
4. Apply power to the controller. LED D55 on the relay board should illuminate and the 'G' relay on the relay board should energize. If not, refer to sheet 4, line 43 of the wiring diagrams and troubleshoot.
5. Attempt to run the car using the inspection up/down toggle switch on the relay board. While holding the toggle up or down, confirm that the 'DL' relay on the relay board energizes. If not, refer to sheet 4, line 45 of the wiring diagrams to determine if the door locks are open.
6. After the 'DL' relay energizes, the 'SR' relay on the relay board should pick. If not, refer to sheet 4, line 47 of the wiring diagrams to troubleshoot.
7. Release the inspection up/down toggle switch.
8. Remove power from the controller.
9. Refer to sheet 4, line 48 of the wiring diagrams. Replace the wire from relay board plug connector P2-2 to the 'P' relay coil that was removed in step 3.
10. Place a digital voltmeter on terminals 7 (positive) and 5 (negative) of the Amicon regulator.
11. Apply power to the controller.
12. Attempt to run the car up by using the inspection up/down toggle switch on the relay board. Hold the toggle switch up until the car just starts to move. Observe the meter. The voltage should be positive. Run the car in the down direction. The voltage should be negative. If these values are reversed the speed reference signal to the regulator at terminals 7 and 5 is reversed. Stop the car and swap the wires.

The controller is now set up for inspection operation. When you are ready to perform the high-speed adjustment procedure go to the next topic.

Adjustment Preparation

Before proceeding with high-speed adjustment, the hoistway switches must be set up properly. Access the top of the car and confirm that the following devices are set correctly:

- The bottom final limit must open 6” below the bottom floor.
- The bottom directional limit must open 1” above the bottom floor. When the car is sitting floor level at the bottom floor, the limit switch must be open.
- The top directional limit must open 1” below the top floor. When the car is sitting floor level at the top floor, the limit switch must be open.
- The top final limit must be set to open 6” above the top floor.
- If the car has hoistway access, two additional limit switches are installed in the hoistway. The first switch is the bottom access zone switch. This switch must be set such that it is closed while the car is floor level at the bottom access floor. It must remain closed until the bottom of the toe guard is level with the top of the hoistway entrance.
- The top access zone switch must be set such that it will be closed while the car is floor level at the top access floor. It must remain closed until the top of the car is level with the sill of the hoistway entrance.

MPU Initial Set Up

1. Press the reset (S1) switch on the MPU. While the MPU is powering up, a message will be displayed prompting you to press 1 if you want to alter the parameters. Press the 1 key at this time.
2. Refer to Section 9 of this manual. Go through all of the parameter screens. Set all parameters applicable to the job configuration.

Note

Pay no attention to the Floor Landing Values at this time. These numbers will mean nothing until a learn trip is completed.

3. Set Maximum Allowed Speed Differential to contract speed. This value will be adjusted later after completing the terminal slowdown adjustments.
4. Write the values to the MPU Non-Volatile memory.
5. Press the reset (S1) switch on the MPU.
6. Allow the MPU to power up. If communications have been established to the Car Station board and the Car Top Encoder, the diagnostic screen will be displayed. If the MPU cannot communicate with the Car Station board the following message will be displayed:

“INCOMPATIBLE LON SOFTWARE OR CAR STATION COMMUNICATION FAILURE. PLACE CAR ON INSPECTION AND THEN PRESS 2 FOR INSPECTION OPERATION ONLY”

If this message is displayed, check power to the Car Station board and check the LON communication network at MPU J1 and Car Station J8.

7. If the MPU cannot establish communication with the Car Top Encoder board, the following message will be displayed: “ENCODER COMMUNICATION FAILURE” If this message is displayed, check power to the Car Top Encoder board and check the LON communication network at MPU J1 and Car Top Encoder J8.

The MPU is programmed. Initial set up of the relay board is complete. A hoistway learn trip must now be performed.

Hoistway Learn

Preparation For Learn Trip

Verify encoder installation is complete:

- Tape and all door magnets are installed.
- Stick is mounted properly; stick cable connected to encoder electronics box.
- U4 terminal limit wired to J3-6 on the encoder processor board. D4 terminal limit wired to J3-1.
- IP & IPX from the controller wired to AJ2-1 & J2-4 on the encoder power supply board.
- IP wire from the controller wired to J3-2 and J3-5 on the encoder processor board.
- Shielded pair communication cable from MPU connected to encoder board J4 connector. Cable shield taped off at encoder end.
- Shielded pair communication cable to Car Station board connected to J4 on the encoder and J10 on the Car Station board. Cable shield taped off at Car Station board end.

Performing the Learn Trip

1. Make sure the controller inspection switch is in the down, or INSP position.
2. Move the car so it is level with the bottom floor. Place both the cartop and in-car inspection switches in the normal position. The learn trip will not initiate unless the car is on automatic operation.
3. Confirm that DOL, EE, and SE inputs are off. The learn trip will not initiate if these inputs are not correct.

Note

If the DCL and DOL inputs are reversed (DOL on and DCL off) and the doors are closed, the parameter “DCL/DOL Closed At Limits is not set correctly. Access Door Parameters menu and change the value of the parameter. Save changes to MPU non-volatile memory before exiting.

4. Open main line disconnect and leave it open for at least one minute to ensure that any latched fault on the encoder will be cleared before the learn trip is initiated.
5. Close main line disconnect. While the controller is powering up, press the “1” key on the display card to access parameter menus.
6. Switch the relay board inspection switch to the up or NORM position.
7. On the main menu screen, use the “#” key to select Learn, Limits, Floor Names, Pretorque. Press the “0” key.
8. Select Learn, Limits, Floor Names, Pretorque and press “0” to access the sub-menu.
9. Select Press Enter for Learn Trip. Press the “0” key.
10. The car will start the learn trip and move up the hoistway at about 24 fpm. It should stop as soon as it reaches the top floor door zone magnet. After reaching the top, the encoder card non-volatile memory have learned the positions of the magnets in the shaft.
11. Floor values now need to be sent from encoder non-volatile memory to the MPU. To do this, go to the Floor Landing Values screen. Select Press Enter for Floor Landing Values From the Encoder. Press “0” to send values to the MPU board.

12. Values from the learn trip will not take effect until they are stored to MPU nonvolatile memory. Select Return to Menu and press “0.”
13. Select Write Values to Non Volatile Memory. Press the “0” key.
14. A dialog asks if you are sure you want to save the values. With the cursor in front of Yes, press “0.”
15. A message will confirm that values have been saved. Open the main line disconnect and leave it off for at least one minute.

The hoistway learn is complete.

Preliminary Adjustments

1. Place the car in the center of the hoistway. Mark the cables with chalk when the car crosshead and the counterweight crosshead are exactly adjacent to each other.
2. If the controller is not set up for seismic operation, go to step 5.
3. Note the encoder position on the diagnostic screen. Write this value down.
4. Access the car parameters menu. Open the VIP, Medical Earthquake Parameters. Enter the encoder position recorded in step 3 into the Counterweight Zone parameter. Save to system nonvolatile memory.
5. Move the car to a convenient floor. Place 40% of rated capacity in the car.
6. On inspection, run the car to about 10 feet above the center of the hoistway.
7. Place an amp probe on one of the leads to the motor armature.
8. Observe the amp probe. Run the car down through the center of the hoistway. Write down the amperage displayed when the car passes by the chalk mark on the cables. The value may vary slightly. Make a few passes and average if necessary.
9. Place the car about 10 feet below the center of the hoistway.
10. Observe the amp probe. Run the car up through the center of the hoistway. Write down the amperage displayed when the car passes by the chalk mark on the cables. The value may vary slightly. Make a few passes and average if necessary.
11. Ignoring whether the recorded amperage values were positive or negative, if the value recorded while the car was running up was greater than the value running down, the car is too heavy. Remove 100 pounds of weight from the car and repeat steps 8 through 10 until the recorded values are equal, but of opposite polarity.
12. Ignoring whether the recorded values were positive or negative, if the value recorded while the car was running down was greater than the value running up, the car is too light. Add 100 pounds of weight from the car and repeat steps 8 through 10 until the recorded values are equal, but of opposite polarity.
13. When the values are equal, but of opposite polarity, the car is balanced. Check how much weight is in the car. It should be between 40 and 50% of rated capacity. If not, the counterweight needs to be adjusted. If the car is too heavy, weight needs to be added to the counterweight to get the car balanced between 40 and 50% of rated capacity. If the car is too light, weight needs to be removed from the counterweight to get it balanced between 40 and 50% of rated capacity.
14. If adjustments are made to the counterweight, repeat steps 10 through 12 until balanced load is in the car. Leave the weights in the car at this time.

High Speed Adjustment

Note

While making the following adjustments, stay away from the terminal floors.

One Floor Run Up & Down

Using the controller keypad, make a one floor run up and a one floor run down in the middle of the hoistway. Refer to Section 9. Adjust motion parameters to achieve the desired ride.

Two Floor Run Up & Down

Using the keypad, make a two floor run up and a two floor run down in the middle of the hoistway. Refer to Section 9. Adjust motion parameters to achieve the desired ride.

Multi-Floor Run Up & Down

Using the keypad, make a multi-floor run up and a multi-floor run down in the middle of the hoistway. Refer to Section 9. Adjust motion parameters to achieve the desired ride.

Continue making multi-floor runs until the system demands contract speed. The actual speed of the car may not reach contract speed. Do not change any parameters to force the car to contract speed. This will be adjusted next.

Regulator Adjustment

1. Using the keypad, place a sufficiently distant car call to allow the car to reach contract speed.
2. While the car is running, observe the diagnostic screen. Check that the actual car speed on the screen is the contract speed of the car. If not, adjust the NMAX pot on the regulator to bring the display as close to contract speed as possible.
3. If contract speed cannot be maintained while running the empty car down, go to step 4. Otherwise go to step 8.
4. If contract speed cannot be maintained while running the empty car down, check the following jumper configuration on the power and regulator boards of the regulator:

Note

The Regulator board is the front board on the regulator. The power board can be accessed by pulling on the 2 pull pins located on the top corners of the regulator board. The regulator board will then hinge down to expose the power board.

5. Turn Main line power OFF. Disconnect one of the generator shunt field wires from the GF1 stud on the controller and measure the resistance of the generator shunt field.
6. Note, from the prints, the voltage coming in on the “U” and “V” terminals on the power board of the regulator. (In most cases this will be 208 VAC.) Calculate the amount of field current required using the formula:
   - Maximum Current Out = 0.67 X AC Voltage @ “U” - “V” Total Generator Field Resistance
7. Based on the Field Current calculated, check the power and regulator boards to make sure the following board modifications have been made to your job. If the modifications have not been made, contact MCE Engineering prior to making any board revisions.

On the Power Board (R2 & R3 resistors are located on the top left corner of the board)

- For Field Current up to 5 amps — R2 & R3 should be clipped out
- For Field Current up to 10 amps — R3 only clipped out
- For Field Current up to 15 amps — Both resistors in circuit

On the Regulator Board (CV Jumper and R168 resistor are located towards the top right corner of the board)

- For Field Current up to 5 amps — CV jumper & R168 resistor in circuit
- For Field Current up to 10 amps — Cut off CV jumper
- For Field Current up to 15 amps — Cut off CV jumper & R168 resistor

8. Run the car to a floor near the bottom of the hoistway. Place full load in the car.
9. Disable the car doors. Place a voltmeter on motor armature leads A1 and A2.
10. Enter a car call near the top of the hoistway. While the car is running up at contract speed, monitor the armature voltage.

11. After the car stops at the desired floor, compare the observed armature voltage to the value on the motor nameplate. If the observed armature voltage is above the value on the motor nameplate, reduce pot V/I-2 on the Motor Field Regulator until nameplate armature voltage is obtained while the car is running up with full load.
12. If the observed armature voltage is below the value on the motor nameplate, increase pot V/I-2 until nameplate armature voltage is obtained while the car is running up with full load. BE CAREFUL NOT TO EXCEED THE NAMEPLATE FULL FIELD CURRENT VALUE OR THE FIELDS MAY BE DAMAGED.

Note

If the car has a geared machine, field weakening may not be required on this particular motor. Increase pot V/I-2 until motor nameplate armature voltage is obtained while the car is running up at contract speed with full load.
If the setting of pot V/I-2 is equal to that of V/I-1, disable field weakening by accessing the Motion Parameters and setting the field weakening speeds to values above contract speed in both Accel and Decel.

13. Run the car to a floor near the bottom of the hoistway. Place a car call near the top of the hoistway. After the car stops, access the scope screen on the display card. Observe the first 5 seconds of the run. If the run appears smooth with no distinct 'step' in the acceleration rate, go to step 14. If there is a step, access Motion Parameters and decrease the FFB Accel speed by a value of 5% and re-attempt the up run. If the step is still visible, continue to decrease the FFB speed in Accel until it is completely gone. Go to step 14.
14. Access Motion Parameters. Increase FFB speed in Accel by a value of 5%. Run the car up and observe the scope screen. Keep increasing FFB speed in Accel until a step is seen in the acceleration. Then decrease it until the step is gone.
15. Place the red meter lead on terminal XY6 in the regulator. Place the black lead on XY3. Adjust the meter scale to 10 volts.
16. With the car running up at contract speed with full load, adjust the ACAL pot on the regulator to obtain 7.5 volts at XY6.
17. Move the red meter lead to terminal XY5. With the car running up at contract speed, adjust the TFB pot to obtain 7 volts.
18. Move the meter leads to terminals MF1 and MF2. Run the car on high speed and observe motor field voltage with the car running at contract speed.
19. Place the car on inspection. While running the car on inspection, adjust pot V/I-1 on the Motor Field Regulator to obtain motor nameplate field voltage. If only field current is given on the nameplate, place an amp probe on the wire attached to terminal MF1 and adjust the V/I-1 pot to obtain the desired current.
20. Open the main line disconnect and install a TEMPORARY jumper from AC2 to terminal J1-3 on the Motor Field Regulator.
21. Close the main line disconnect. Adjust Motor Field Regulator pot V/I-3 to obtain the same voltage as that of V/I-2 observed in step 11.
22. Open the main line disconnect and move the jumper from AC2 to terminal J1-3 on the Motor Field Regulator.
23. Enable the car doors. Remove the appropriate amount of weight and ride the car, staying away from the terminal floors. Make any necessary adjustments to the speed curve.

24. Remove weight from the car, approximately 100 pounds at a time. Staying away from the terminal floors, observe one floor, two floor, and multi floor runs to be sure that the car rides well under all load conditions.
25. If vibration occurs while the car is accelerating or decelerating, turn the PN pot counterclockwise in small increments until the vibration is decreased. If this does not remedy the vibration, turn the PN pot back to its original setting and turn the ACMP pot clockwise or counterclockwise to reduce the vibration felt in the car.
26. If poor tracking is observed during acceleration and deceleration, turn the PN pot clockwise until the car tracks the pattern properly without vibration being introduced into the ride.

Regulator high speed setup is complete. Go to Section 7 and perform the terminal slowdown set up. Return for final adjustments to car ride quality.

Ride Quality Adjustments

Regulator tracking is the most critical adjustment for high quality ride and superior performance. If the regulator does not track the speed command well, ride quality will not be acceptable.

To determine how well the regulator is tracking the speed command, access the scope screen on the controller. Enter various calls in the system and compare the desired car speed to the actual car speed. When the car decelerates, particularly coming out of high speed, there will be a slight delay between the desired speed and the actual speed. This delay should be between 150 milliseconds (0.15 seconds) and 250 milliseconds (0.25 seconds). If the delay is longer, or the car is overshooting, undershooting, or 'spotting' coming into the floor, the regulator needs to be adjusted.

There are several pots on the regulator that affect performance and tracking.

- PNSpeed loop gain. Turn clockwise to improve tracking. Adjust in conjunction with ACMP pot to reduce vibration.
- PICurrent Loop Gain. Increase when "TE" light will not go off during any runs. If extreme instability of the system exists, turn pot clockwise as a last resort.
- ACMP Armature Voltage Compensation adjustment to the speed regulator.

To adjust the regulator for optimum ride quality and performance:

1. Place an oscilloscope on regulator terminal XY8. The common lead should be placed on XY3.
2. While running the car, observe the scope. If the generator field current is unstable, turn the ACMP pot clockwise to improve regulator stability and reduce vibration. If the generator field current is stable, turn the pot counterclockwise in small increments to improve regulator tracking.

Note

Too much ACMP will cause the car to spot in leveling and run at speeds lower than contract speed.

When you are satisfied with the ride quality of the car, proceed to Section 8 for load weigh and pre-torque set up procedures if so equipped.

Amicon Regulator Reference Information

Status and Fault Indicators

- RUN (Run Input) - Indicates that the control has a run input and is currently enabled.
- LL (Re-Level Limit) - Indicates that the re-leveling overspeed circuit is enabled and re-level overspeed trip limit is reduced to approximately 10% of contract speed.
- TE (Tracking Error) - Indicates that there is currently a difference between commanded speed and actual speed of greater that 10% of full scale.
- SPD (Overspeed Fault) - The overspeed trip is adjustable from 110% to 125% of the contract speed setting or at approximately 10% of the contract speed when the “LL” contact is pulled in during re-leveling. The overspeed fault circuit will latch if the scaled tachometer feedback should exceed 7.0 volts by more than overspeed trip percentage (110-125%).
- SCR (SCR Power Fault) -When a run command is given to the control, main SCR power is applied at the same time. If the control does not sense at least 250VAC within 2 seconds after a run command, the SCR power fault will latch. Similarly, when the run command is removed from the control, main SCR power is disconnected at the same time. If the control does not sense that the SCR voltage has dropped to less than 50VAC within 2 seconds after the run command has been removed, the SCR power fault will latch.
- TACH (Tach Loss Fault) -If at any time the motor armature voltage and tach feedback are more than 20% different (as is the case when the tach wires become disconnected or are reversed), the tach loss fault will latch.
- DIR (Direction Fault) - Indicates and disables control when the tachometer direction is different from the command speed. If the speed reference direction is up and the tach moves more than 10% in the down direction, or if the speed reference direction is down and the tach moves more than 10% in the up direction, the direction fault will latch.
- MP (Positive Bridge Enabled) - Indicates the positive SCR bridge (motoring) is enabled.
- MN (Negative Bridge Enabled) - Indicates the negative SCR bridge (regenerating) is enabled.
- +/- 15 (Power Supplies OK) - Indicates low voltage power supplies are present.

Potentiometer Functions

- PN (Speed Loop Gain) - Sets the gain of the speed feedback loop. The gain should be adjusted for good regulation and stability.
- NMAX (Contract Speed) - Fine adjustment for setting contract speed with the maximum speed reference input to the control.

Note

This adjustment should be made after selecting the appropriate tach feedback scaling switch setting of S1.

- ACAL (Armature Feedback Calibration) - The armature feedback calibration adjustment is used to achieve good stability and response. It is manually adjusted by monitoring armature feedback test point (XY6) and adjusting the potentiometer clockwise for 7.0V at contract speed. This adjustment may be fine tuned for maximum stability. The response may be too slow if the armature feedback is too high. This adjustment, as well as stability gain, sets the armature voltage reference for the tach loss circuit. Setting will vary depending on the load. To adjust, run one car at contract speed in both directions to determine the voltage difference by subtracting one reading from the other. One-half of this difference should be subtracted from the baseline of 7.0V. Example - If difference is 0.20 volts. Subtract 0.1 (2 of 0.20) from 7.0V. Therefore, pot should be adjusted to 6.9 up.
- ACMP (Armature Feedback Compensation) - Armature feedback compensation increases the effect of armature feedback. The response of the machine may be too slow if ACMP is too high. The ACMP potentiometer should be adjusted to achieve good, smooth operation. Too much ACMP may also affect running regulation.
- IDN (Current Limit Set point) - Set for the amount of field current the control can regulate. The IDN pot is preset and sealed at the factory. It should not be readjusted. This pot sets the maximum amount of current output. It is preset for 15 amps. Instability in the system could result if the current is adjusted too high.
- OFFSET - Provide an offset adjustment to prevent the elevator from ‘creeping’ when zero speed is commanded.
- PI (Current Loop Gain) - Normally left about mid range. Provides a means to increase or decrease gain of the control loop if the generator field current is unstable.
- TFB (Tach Feedback Calibration) - Used to calibrate tach feedback at contract speed for 7.0V. (ATXY5) This signal is used in the tach loss, direction fault, and overspeed circuits as well as for monitoring actual vs. set speed.
- OVS (Overspeed Set point) - Used to set the overspeed trip point of the control from 110% (fully CCW) to 125% (fully CW). The re-level limit will also be affected by this adjustment from 10% (fully CCW) to 12.5% (fully CW).

Regulator Test Points

- XY3 (COMMON): Common test point for all other test points. The black meter lead should always be connected here when referencing other test points.
- XY4 (REF IN): Pattern reference test point. With the red meter lead on this test point, the polarity should be positive when the pattern reference on terminal 5 is positive in respect to terminal 7.
- XY5 (TACH): This test point monitors tach feedback. The polarity on this test point should be positive when the car is traveling in the up direction.
- XY6 (ARM FB): This test point monitors armature voltage feedback. The polarity on this test point should be negative when the car is traveling in the up direction.
- XY7 (OVERSPEED): This test point monitors the overspeed threshold setting. This should be 7.75 volts if the OVS pot is set to have the overspeed fault occur at 10% above contract speed.
- XY8 (FLD CURR): This test point monitors generator shunt field current. The actual generator field current as it relates to the reading seen on the meter is offset by a multiplier depending on how the regulator is set up initially. The actual generator field current is obtained by multiplying the appropriate multiplier in the following table by the actual meter reading:

Power Supply Board Jumpers	Regulator Board Jumpers	Regulator Rating	Meter Reading Multiplier
R2 and R3 OFF	CV and R168 ON	5 amps	0.33
R3 OFF, R2 ON	CV and R168 OFF	10 amps	0.67
R2 and R3 ON	CV and R168 OFF	15 amps	1.0

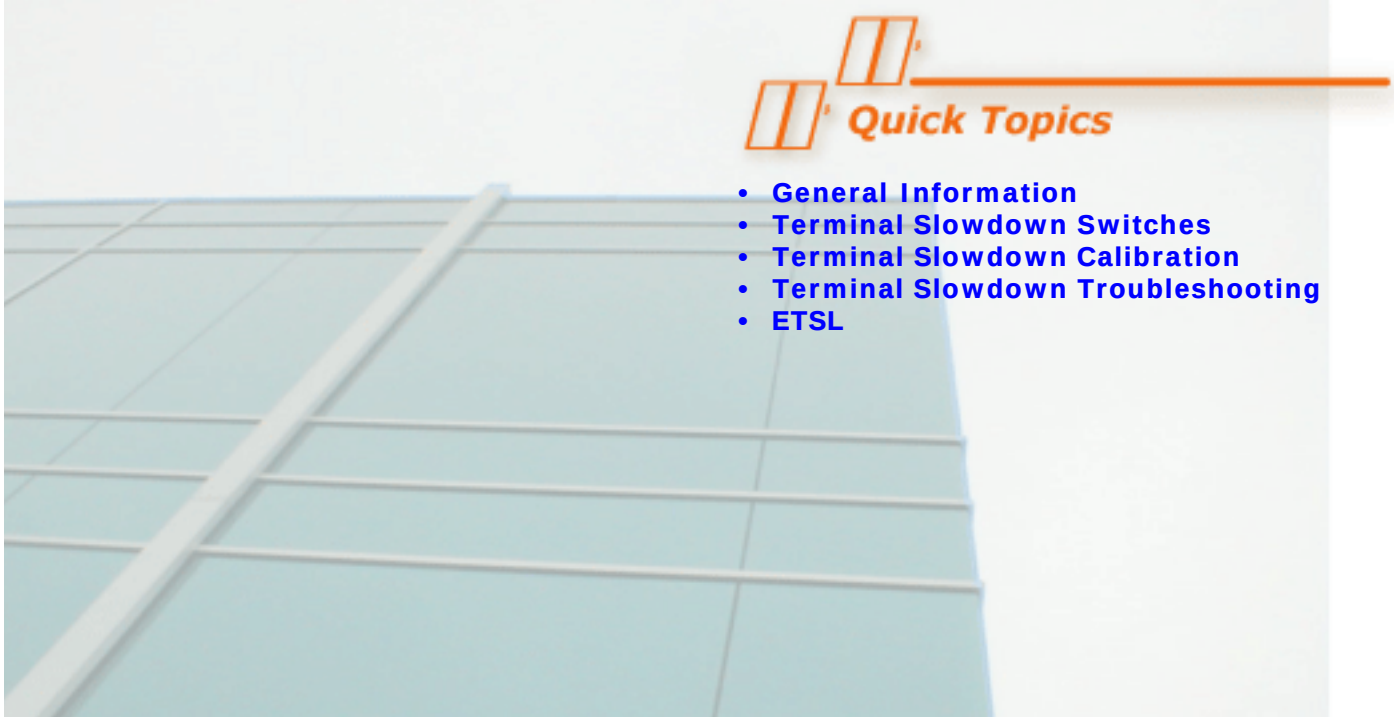

Terminal Slowdowns & ETSL System

General Information

The IntellaNet terminal slowdown system constantly monitors car speed and position. The terminal slowdown system has the ability to gently slow and stop the car if it is approaching either the top or bottom of travel at a speed greater than the normal deceleration rate is capable of handling without the car opening the final limit. (The normal deceleration rate is automatically set to equal the greatest acceleration rate set on the Motion Parameters screen. Please refer to "Motion Parameters" on page 10-22.)

The alternate deceleration rate, or NTS Speed, should be set to 0.5 ft/s^2 greater than the normal deceleration rate, disregarding any rounding or jerk rate in the normal speed curve. Using a rate that is only slightly greater than the normal rate of deceleration ensures that any activation of the NTS portion of the terminal slowdown system will not be detectable by passengers in the car. Under most conditions, the car will use its primary slowdown means and the terminal slowdown system will not interfere. (For high profile/high speed patterns, NTS may activate to help slow the car at terminal landings. Should this occur, the NTS deceleration rate should be increased in small increments until it no longer interferes.)

The NTS speed for the present car position and direction of travel is shown on the diagnostic screen of the monitor. The control system will not allow car speed to exceed the NTS at any time. If it does exceed the NTS speed, the control system ETS system will stop the car.

If the elevator speed does not respond to the NTS deceleration rate, the terminal slowdown system ETS speed monitor will stop the car. This will occur at a point where the drive or generator regulator can no longer safely stop the car. The ETS deceleration rate should be set high enough to allow a fully loaded car to perform an “NTS test” at each terminal. If the terminal slowdown system detects that the car would need to achieve a deceleration rate greater than the ETS setting to stop at the terminal floor from its present speed and position, the terminal slowdown system ETS function will trip, removing power from the hoist motor and brake. Please refer to “Terminal Slowdowns” on page 10-60.

Terminal Slowdown Switches

The first procedure to accomplish is to mount the terminal slowdown switches. There are several tables following which list the distance at which the switches should be set based on contract speed and maximum programmed deceleration rate for the car.

To determine the correct distance for the limit switches, it is first necessary to determine the maximum deceleration rate of the car:

- Press the S1 (Reset) switch on the MPU. As the MPU is powering up, a message will be displayed prompting you to press “1” to alter the parameters. Press the “1” key on the display card. This will allow you to view the car parameter menus.
- The cursor will be flashing on the first item in the menu, “Motion Parameters”. Press the “0” key to access the motion parameters menu.

The following illustration shows an example of a Main Car Parameters menu.

Figure 8.1 Main Car Parameters Menu

```
■  1-MOTION PARAMETERS
   2-BRAKE AND HOISTWAY DEVICES PARAMETERS
   3-CAR OPERATING DEVICES PARAMETERS
   4-DOOR PARAMETERS
   5-FIRE, EMERGENCY POWER PARAMETERS
   6-VIP, MEDICAL, EARTHQUAKE PARAMETERS
   7-MISCELLANEOUS PARAMETERS
   8-SIMPLEX/INC RISER PARAMETERS
   9-FLOOR NAMES, PI OUTPUTS, CE VOICE UNIT
  10-EVENT DISABLE PARAMETERS
  11-CAR CALL LOCK ENTRY
  12-HALL LOCK ENTRY (SIMPLEX/IR ONLY)
  13-FLOOR LANDING VALUES
  14-PRETORQUE, LEARN TRIP
  15-TERMINAL SLOWDOWNS
  16-MODEM PARAMETERS
  17-PASSWORD/JOB CONFIG/TIME/CLEAR EVENTS
  18-WRITE TO NON VOLATILE MEMORY AND EXIT

  To save new parameters, press ENTER
  while the cursor is blinking on No. 18.
```

Figure 8.2 Motion Parameters Menu

```
Speed (fpm) Relevel:    Max:    Min:
Energy conserv switch: HIGH PERFORMANCE
SPEED CURVES: HP-HIGH PERFORMANCE
 L-Long  S-Short Runs  EC-Energy Conserve
Max floor distance for HPS (counts):00000
                              HPL  HPS   EC
Init jerk rate (ft/s3):      _._  _._  _._
Accel Rate (ft/s2):          _._  _._  _._
Jerk rate (ft/s3):          __._ __._ __._
Response time (1/100  sec):   __   __   __
Final jerk rate (ft/s3):     _._  _._  _._
Final jerk dist. (in):        __   __   __
Advance (counts):             __   __   __
Pre-open (counts):           ___  ___  ___
Plateau length (in):                    __
Add. plat. length (ft): __    Speed:  ____
Dist. (counts) level:   __  Relevel:    __
FFA/FFB speed (fpm) accel:____  decel:____
Overspeed trip speed: (fpm)           ____
SCR/REG restart time: (sec)             __
Drive Type: MAGNETEK AC
Pretorq/Analog Ins: NONE
```

- Look at the Acceleration Rate parameters. The largest value saved here will be equal to the maximum normal deceleration rate. Typically, this will be between 2.0 ft/s^2 and 4.0 ft/s^2. In the example, the largest value for the acceleration rate is 3.5 ft./s^2.

Note

NTS and ETS deceleration rates are set on the Terminal Slowdowns screen. NTS should be initially set to 0.5 ft/sec^2 greater than the highest acceleration rate. Please refer to “Terminal Slowdowns” on page 10-60.

- Refer to the following tables. Find the table that has a deceleration rate equal to or greater than the largest programmed acceleration rate value. For speeds not divisible by 100 (i.e., 350 FPM), use the distance values for the next greater speed.

Note

For car speeds under 200 FPM, use a single limit at the top (4SU) and bottom (4SD) set at a distance of 10 inches below the top floor and 10 inches above the bottom floor.

Table 8.1 Acceleration Rate Less than 3.0 ft/s^2

Car Speed	1SU / 1SD	2SU / 2SD	3SU / 3SD	4SU / 4SD
200			3’	1’ 6”
300			5’ 6”	3’
400			9’	3’
500			13’ 6”	3’
600		18’ 6”	12’	3’
700		24’	16’	3’
800	31’	22’	15’	3’
900	28’ 6”	28’	17’	3’
1000	46’ 6”	33’	20’	3’
1100	55’ 6”	39’	23’	3’
1200	65’	45’	26’	3’
1300	76’	53’	30’	3’
1400	87’	59’	33’	3’
1500	99’ 6”	67’	37’	3’

Table 8.2 Acceleration Rate Greater Than 3.0 ft/s^2 But Less Than 3.5 ft/s^2

Car Speed	1SU / 1SD	2SU / 2SD	3SU / 3SD	4SU / 4SD
200			3’	1’ 6”
300			5’ 6”	3’
400			8’ 6”	3’
500		12’	7’	3’
600		16’ 6”	10’	3’
700		22’	12’	3’
800	28’	19’	19’	3’
900	34’ 6”	23’	13’	3’
1000	41’ 6”	29’	16’	3’
1100	49’ 6”	33’	18’	3’
1200	58’	39’	21’	3’
1300	67’ 6”	45’	24’	3’
1400	77’ 6”	53’	28’	3’
1500	88’	59’	31’	3’

Table 8.3 Acceleration Rate Greater Than 3.5 ft/s^2 But Less Than 4.0 ft/s^2

Car Speed	1SU / 1SD	2SU / 2SD	3SU / 3SD	4SU / 4SD
200			2’ 6”	1’ 6”
300			5’	3’
400			7’ 6”	3’
500		11’	7’	3’
600		15’	9’	3’
700		20’	11’	3’
800	25’	17’	10’	3’
900	31’	22’	11’	3’
1000	37’ 6”	27’	15’	3’
1100	44’ 6”	31’	17’	3’
1200	52’ 6”	37’	20’	3’
1300	61’	41’	22’	3’
1400	70’	47’	25’	3’
1500	79’ 6”	53’	28’	3’

Table 8.4 Acceleration Rate Greater Than 4.0 ft/s^2

Car Speed	1SU / 1SD	2SU / 2SD	3SU / 3SD	4SU / 4SD
200			2’ 6”	1’ 6”
300			4’ 6”	2’
400			7’	3’
500		10’ 6”	7’	3’
600		14’	9’	3’
700		18’ 6”	11’	3’
800	23’	17’	10’	3’
900	28’ 6”	21’	12’	3’
1000	34’ 6”	25’	14’	3’
1100	41’	29’	16’	3’
1200	48’	33’	18’	3’
1300	56’	39’	21’	3’
1400	64’	43’	23’	3’
1500	72’ 6”	49’	26’	3’

Note

The values in these tables are suggested distances. If the switches are set closer to the floor, the car will not have enough distance to slow down from contract speed at the maximum acceleration rate measured during the learn procedure.

Setting the switches further than the values specified above will have no adverse effect on the operation of the system. It is better to have the switches set too far than too close.

Terminal Slowdown Calibration Procedure

The terminal slowdown system requires a learn procedure for calibration. With the car on inspection, place it somewhere near the center of the hoistway away from all terminal floor slowdown switches. Verify that all of the used limit switch inputs are energized. Check the slowdown switch inputs on the display card.

1. Confirm that only the slowdown switch inputs that you wired to the system are on. If you wired the switch and it is not shown as turned on, the system will not work properly.
2. After checking that all of the switches are wired correctly, run the car on inspection to the top floor. As the car is running, watch the display card. The up direction slowdown switches should turn off in order from the lowest number (UP1, for example) to the highest. When the car is at the top floor, all of the up direction slowdown switches should be off and the down direction switches should be on.
3. At no time should any of the down switches turn off or any switch turn off and on again. This will cause a fault during the learn procedure.
4. Again while monitoring the display card, run the car on inspection to the bottom floor. All of the down direction slowdown switches should open in order from lowest number (DN1, for example) to highest. When the car is at the bottom floor, all of the down direction slowdown switches must be open.

Note

On Inspection operation, when the slowdown switch nearest the terminal floor is opened (U4 or D4), the car will automatically slow to 20 FPM. This prevents a higher inspection speed from causing the car to open the final limit and prevent the car from moving. If you wish to run the car at inspection speeds greater than 20 feet per minute before terminal slowdown switches are installed, you must temporarily place jumpers from AC2 to U4 and D4 inputs respectively.

Danger

Elevator control products must be installed by experienced field personnel. This manual does not address code requirements. The field personnel must know all the rules and regulations pertaining to the safe installation and running of elevators.

Figure 8.3 Status Screen

```
15:49:48  01/08/05 WEDNESDAY                018W
                266 PARK AVENUE CAR 12
  BC    1C    2C    3C    4C    5C    6C    7C
  8C    9C    10C   11C   12C   BLK
                    WTA   CME   WTD   WTB   MGS
 BZI   ATT   UPB    DNB   BYP  INDC   DOB   DCB
  SE    EE   DCL    DOL   FKS   RES   FDH   DDS
 SAF         LIM     CG    DG   REG   PWA   PRV
 LEV    DZ   INS    IUP   IDN  MGSH  DDSH  DOBH
 LRN  LMGS  OSPD    EMG   REC  RECA  AREC  BREC
CREC        FRST   FRLF
 IC1   IC2   IC4    IC8               UDAC  DDAC
 CAL   UDG   DDG    DAL   UAL  FRLC   FPC   BUZ
                           HDD  CXXP   CXP   OXP
 APW   RBK   LEV    EFX   FFB          FRX  CTOP
FRLH   FRX   TCU          UPG   DNG   EML   EQL
 IH1   IH2   IH4    IH8  IH16   WBL  UDAH  DDAH
SPEED-ACT 0000  DES  0000 DEV 000
ENC 014978 LDG   6 HLDG      HLDR     [ ]
%FL TR06  M07 L1 C07 010 02           375
000 EVENTS DETECTED  017N 1           HP
SLWDNS UP1   UP2    UP3   UP4   DN1   DN2   DN3  DN4
LIMIT SPEEDS               ETS +1850         NTS +1680
LIMIT STATUS   NORMAL
CONTROL STATUS NORMAL
```

1. Once you have confirmed that the limit switches are working properly, place the “Door Disable” switch on the relay board in the down, or “Disable” position. Place the car on Automatic operation and allow it to level into the bottom floor.
2. Press the S1 (reset) button on the MPU card. As the MPU is powering up, press the “1” key on the display card.
3. When the Main Car Parameters menu is displayed, use the “#” key to move the cursor down to Motion Parameters. Press the “0” key.
4. Refer to Accel Rate. Determine what the greatest programmed rate of acceleration is. Exit and return to the main menu.
5. When the Main Car Parameters menu is displayed, use the “#” key to move the cursor down to Terminal Slowdowns. Press the “0” key.
6. Using the “#” key move the cursor down to NTS Decel Rate. Set this value to rate 0.5 ft./s2 more than the greatest rate observed in Step 4.
7. Using the “#” key move the cursor down to ETS Trip Rate. This rate should initially be set to a value 1.5 ft./s2 greater than the NTS Decel Rate.

Danger

Setting the ETS Trip Rate to a larger value will cause the trip to occur at a location closer to the floor. This may cause the car or counterweight to strike the buffer, possibly at a high rate of speed. Setting the ETS Trip Rate to a value that is too small may cause the ETS trip to occur while the NTS deceleration is in effect. An initial value of 1.5 ft./s2 greater than the NTS Decel Rate is recommended.

8. Using the “#” key, select Press Enter to Place Limit in Learn. Press the “0” key.
9. A message will appear: “Limit Section of Relay Card in Learn! To Abort Power Must be Turned Off. Reset MPU Card to Start Limit Learn” Press the S1 (Reset) button on the MPU card.
10. The MPU card will power up. Do not access the parameters menu. Once the card is powered up, the diagnostic screen will display the message “Learn-Move to Top Floor.”
11. Using the “#” key on the display card, move the cursor down so it is flashing next to the top floor car call. Press the “0” key to register a top floor car call.
12. As the car is ramping up to speed, a message will be displayed, “Learn-Acquire Max Speed,” indicating that the terminal slowdown system is determining the pulses per second of the encoder input at contract speed.
13. When the car stops at the top floor, a message states “Learn-Move Down One Floor.” Using the keypad on the display card, place a car call where the car is capable of doing a one floor run down into a floor that has a typical floor height.
14. After the car stops at the floor, a message states “Learn-Move Up One Floor.” Place a car call one floor above the present car position.
15. After the car performs the one floor run in the up direction, bring the car to the top floor (if it is not already there).
16. After the car stops at the top floor, a message will be displayed that states, “Learn-Move To Bottom Floor.” Place a car call for the bottom floor.
17. After the car stops, a message will be displayed for a brief time that states “Learn Complete.” This indicates that the terminal slowdown learn procedure has been successfully completed.

If any faults are encountered, an error message will appear on the diagnostic screen.

Please refer to “ETSL System” on page 8-11 if the car has an ETSL system. If not, return to the high-speed adjustment chapter for the drive system that is in the controller for final adjustments to ride quality.

Terminal Slowdown Troubleshooting

In order for the terminal slowdown system to work properly, it must have the appropriate signals. If a problem is detected with any of these signals, an error message will appear at the bottom of the diagnostic screen.

Learn Procedure Errors

The following table provides an explanation for errors that may be detected during the learn procedure.

Table 8.5 Learn Procedure Error Messages

Error Message	Cause	Corrective Action
LEARN - Disconnected Tach	Terminal slowdown system has not detected an encoder input.	Encoder must be wired to plug P8 on the relay board on controllers with SCR or AC drives and to J14 on the relay board on controllers with MG sets. Check encoder connections.
LEARN - Tach Wiring Error	Terminal slowdown system has detected an encoder input but the input is not operating properly.	Check encoder connections as described above. Confirm that A and B channels are wired correctly. A/B reversal is the most common cause of this error.
LEARN - Slowdown Error	Terminal slowdown system has detected that the terminal slowdown switches are not operating properly.	Make certain all required switches are wired to relay board connector J12. Run car on inspection from bottom to top and back. Be sure that switches open in correct order and do not turn off or on at any point other than those listed in the distance tables.

Terminal Slowdown Errors

The following table lists errors detected by the terminal slowdown system.

Table 8.6 Terminal Slowdown Error Messages

Error Message	Cause	Corrective Action
TRIP- Slowdown Error	System has detected that the terminal slowdown switches are not operating properly.	Make certain all required switches are wired to relay board connector J12. Run car on inspection from bottom to top and back. Be sure that switches open in correct order and do not turn off or on at any point other than those listed in the distance tables.
TRIP - ETS UP	System has detected that the car was approaching the top floor too fast.	Indicates that both normal speed control means and NTS section of terminal slowdown system have failed to stop car. A major malfunction has occurred in both of these devices or the drive or regulator. Check speed reference to drive. If operating properly, speed signal decreasing as car is commanded to slow, then drive or regulator is the cause. If speed signal is not operating properly, replace relay board.
TRIP - ETS DN	The terminal slowdown system has detected that the car was approaching the bottom floor too fast.	Indicates that both normal speed control means and NTS section of terminal slowdown system have failed to stop car. A major malfunction has occurred in both of these devices or drive or regulator. Check speed reference to drive. If it is operating properly, speed signal decreasing as the car is commanded to slow, then the drive or regulator is the cause. If the speed signal is not operating properly, replace the relay board.
TRIP - Tach Fault	The system has detected that the encoder input is not operating properly.	Check the encoder connections to the relay board.
TRIP - Inspection Overspeed	The system has detected an overspeed on inspection operation.	Car speed is limited to 120FPM (2 ft./s) on inspection. The most likely cause is a scaling problem with the drive or regulator.
TRIP - Door Zone Overspeed	The system has detected an overspeed with the car or hoistway door open.	Car speed is limited to 120FPM (2 ft./s) with the car or hoistway door open. The most likely cause is a problem with the drive or regulator.
CLAMP - NTS UP	The system has detected that the car was approaching the top floor too fast for normal slowdown alone. NTS decel may have to be incrementally increased on high profile/high speed cars to prevent interference.	Indicates speed reference signal from MPU did not initiate a slowdown or the car did not respond to the signal. Check cartop encoder for proper operation. If OK, perform another hoistway learn procedure to make sure the MPU has correct values stored for floor locations. If problem persists, check drive. It may not be tracking speed command correctly. See cause at left.
CLAMP - NTS DN	The system has detected that the car was approaching the bottom floor too fast for normal slowdown alone. NTS decel may have to be incrementally increased on high profile/ high speed cars to prevent interference.	Indicates speed reference signal from MPU did not initiate a slowdown or car did not respond to the signal. Check cartop encoder for proper operation. If OK, perform another hoistway learn procedure to make sure that MPU has correct values stored for floor locations. If problem persists, check drive. It may not be tracking speed command correctly. See cause at left.

ETSL System

An ETSL (Emergency Terminal Speed Limiting) is only required where reduced stroke buffers are installed. The purpose of the ETSL system is to slow the speed of the car to a point at or below the buffer rated striking speed. The ETSL system accomplishes this by opening the safety circuit and dropping the brake.

The ETSL system consists of a sensor board, two memory reed switches, and two magnet bracket assemblies. The sensor board and reed switches are mounted on top of the car. The magnet brackets are mounted at specific distances (based on car speed and buffer stroke) from the top and bottom terminal floors. As the car passes the magnet bracket, the speed of the car must be slow enough that the reed switches are closed for more than 100 milliseconds. If the switches are closed for less than 100 milliseconds, the car is traveling too fast and the sensor board will open contacts in the safety circuit, initiating an emergency stop.

Note

Before adjusting the ETSL system, the car must be up to contract speed and all motion parameters set to their final values. Failure to do this could cause nuisance trips of the ETSL system.

ETSL Wiring

The ETSL board will accept 18 -24 volts AC or DC. Power must be wired to terminal J3-8 and J3-9.

The memory reed switches are wired to terminal J1.

- Switch 1 is wired to J1-1 and J1-2.
- Switch 2 is wired to J1-3 and J1-4.

In compliance with ANSI code, no single jumper or short can disable the ETSL system. To comply with this, the safety circuit must be opened in two different locations. Wire the sensor board so terminals J3-4 and J3-5 are in series with the stop switch on top of the car. Wire J3-6 and J3-7 so they are in series with the low side of the safety circuit relay or, if this is not possible, it can be wired in series to interrupt the controller feed to the safety circuit.

When power is applied to the board, the green LED should flash slowly. This indicates that the board is functioning correctly. There are two red LEDs on the board, one indicating that the board has tripped and one indicating a malfunction.

ETSL Bracket Mounting & Set Up

Position the magnet brackets at the appropriate distance from the top and bottom terminal floors using the chart below:

Table 8.7 ETSL Bracket Mounting

Car Speed (FPM)	Buffer Stroke	Bracket 1 Distance	Bracket 2 Distance
500	8.5”	6’ 9”	2”
600	8.5”	11’ 3”	2”
600	18”	6’ 4”	3”
700	18”	11’ 6”	3”
800	39”	6’ 6”	4’ 4”
1000	39”	20’ 3”	4’ 4”
1000	49”	15’ 3”	4’ 10”
1000	59”	10’	5’ 4”
1200	49”	31’ 9”	4’ 10”
1200	59”	26’ 8”	5’ 4”
1200	74”	19’	6’
1400	74”	38’ 4”	6’
1600	89”	52’ 9”	6’ 6”

After the brackets are installed, it is necessary to adjust the distance between the magnets. The top magnets on the bracket should be south pole and the bottom magnets north pole.

Using the following table, adjust both sets of magnets on the bracket so they are the correct vertical distance apart.

Table 8.8 ETSL Bracket / Magnet Separation

Car Speed (FPM)	Buffer Stroke	Bracket 1 Magnet Separation	Bracket 2 Magnet Separation
500	8.5”	10.5”	8”
600	8.5”	13.5”	8”
600	18”	10.25”	12”
700	18”	13.5”	12”
800	39”	10.25”	17”
1000	39”	17.75”	17”
1000	49”	15.5”	19.5”
1000	59”	12.75”	21”
1200	49”	22.25”	19.5”
1200	59”	20.33”	21”
1200	74”	17.25”	24”
1400	74”	24.5”	24”
1600	89”	28.5”	26”

After the magnets are adjusted, remove any jumpers from the ETSL sensor board contacts. These jumpers may have been placed on the controller.

As the car passes the magnet brackets, the yellow LEDs for the reed switches should turn on and then off. Confirm that if the car is stopped with the sensor between the magnets, the yellow LED is on. If not, the magnets may be installed incorrectly or the sensors are installed upside down. If the LED is on for less than 100 milliseconds, indicating the car is traveling at a speed greater than it should be at this distance, the ETSL board will trip, opening the contacts in the safety circuit.

ETSL Testing

- Run the car at contract speed with both full load and no load into the top and bottom floors to ensure that the sensor board does not trip.
- If the board does trip, confirm that the bracket is the correct distance from the floor and that magnets are the correct distance apart.
  - Check the deceleration rate of the car. If the deceleration rate is greater than 3.5 ft/s^2, the brackets may need to be moved closer to the terminal floors.
  - Contact MCE Technical Support for assistance if needed.
- Assuming the system does not trip:
  - Move the magnets on the top terminal bracket closer together, approximately half of the correct distance.
  - Run the empty car into the top floor at contract speed. As the car passes the bracket, the sensor board will trip, opening the safety circuit and stopping the car.
  - After tripping, the board will automatically reset after 15 seconds. Return the magnets to their correct position and repeat this procedure for the bottom bracket.

The ETSL system is now adjusted.

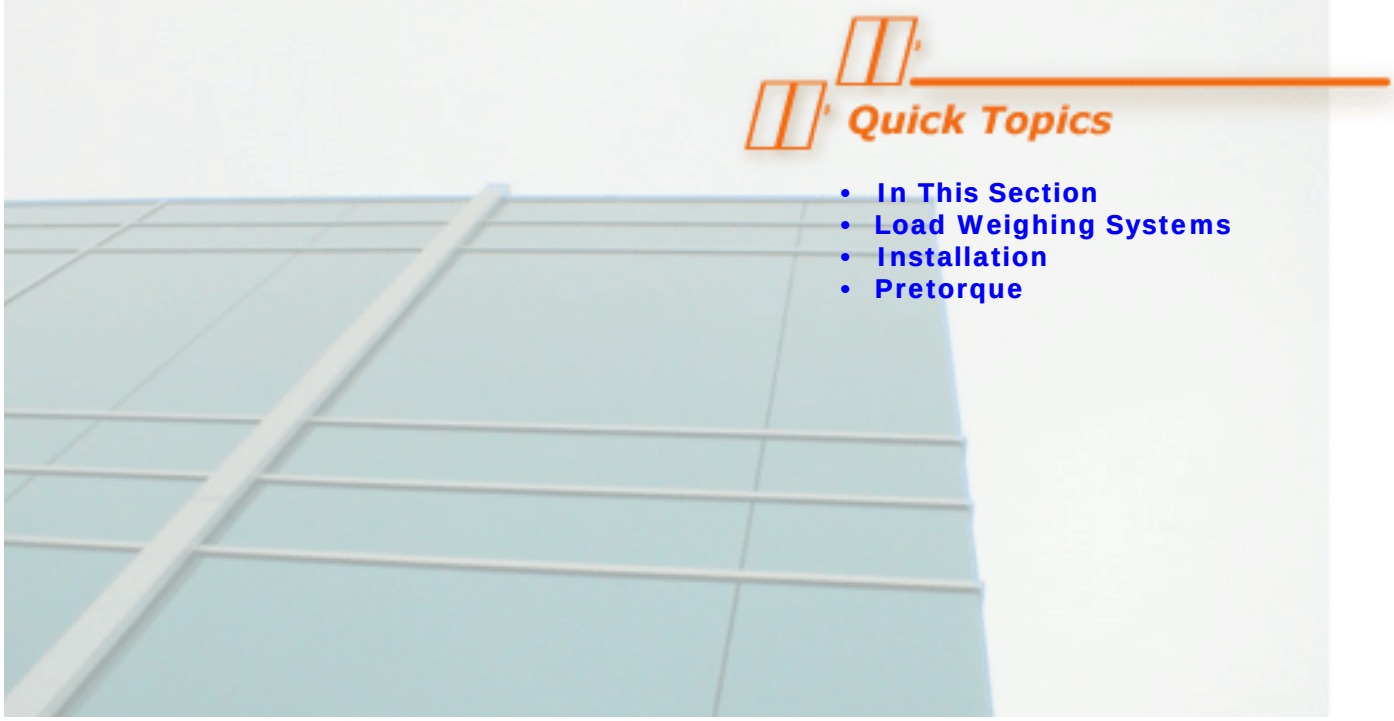

Load Weigher and Pretorque

In This Section

This section describes load weighing systems used with the IntellaNet controller, including pre-torque adjustment.

Load Weighing Systems

IntellaNet controllers with pretorque use a K-Tech or EMCO load weighing system. The system must be properly installed and adjusted. Otherwise, poor ride quality and improper operation may result.

This section is intended as a supplement to K-Tech and EMCO instructions and to the MCE instructions shipped with each system. Read all related material before beginning installation.

Newer K-Tech weighers have an automatic re-calibration feature, eliminating the need to manually re-calibrate the unit. EMCO weighers to not have this feature.

K-Tech Auto Re-Calibration

In order for auto re-calibration to take place, Auto Calibration must be enabled on the Car Operating Devices menu. Please refer to “Car Operating Devices Parameters” on page 10-30. A technical description of the re-calibration sequence is provided below.

Sequence

When the pre-torque feature is enabled the car controller must be able to determine the load in the car. Occasionally the K - Tech weigher needs to be re-calibrated. In the past this has been done by bringing an empty car to the bottom terminal landing and manually adjusting the sensor so that the load percentage to the controller reads zero. This calibration process can now be performed automatically.

The K-Tech weigher can be told to calibrate itself by enabling the appropriate input. This input is triggered by a calibration output (CAL) mapped to the Intellanet controller car station.

Frequency

The calibration process will be triggered when the car is empty and:

- Once every day after 2:00 AM, by bringing the car down to the bottom landing, but only if the car has not previously calibrated on the same day.
- Once during a one-hour time interval if the car happens to arrive at the bottom landing and close the doors.
- Every time the car is reset or powered up if the car happens to arrive at the bottom landing and close the doors.
- When the fault “Weighing Device Failure” occurs. The fault is used because, if power to the weigher is lost, newer weighers will calibrate when power returns. If this happens and the car is not empty or not at the lowest landing, the weigher will not be calibrated correctly and will cause a “Weighing Device Failure”.
- By pressing any number on the MPU keypad when the car screen cursor is next to the “Turn on strain gauge calibration-CAL” entry in the Pre-torque Setup Menu. This feature is useful for setting up calibration the first time a car is placed in service.

The car will be determined to be empty if all of the following conditions have been met for the last 5 seconds:

- The car is on Normal Automatic Service.
- The car has not moved.
- The car doors have not moved.
- The electric eye and safety edge inputs have not triggered.
- There have been no car calls present.
- The hall call and hall direction assignment has not changed.

Once the car is determined to be empty, the car will place itself on door disconnect/bypass service and bring itself to the bottom terminal landing. During the sequence, the message “Strain Gage Calibration” will appear at the bottom of the car LCD.

Upon stopping at the bottom terminal landing the car will wait for 10 seconds to stabilize. The car will then enable its calibration output (CAL) for 3 seconds. After the calibration process, the car will save the time the calibration was completed and remove the “Strain Gage Calibration” message from the screen.

If the weigher does not reset to within 5% of the top full load within 5 seconds of calibration completing, fault No. 151 “STRAIN GAGE DID NOT SET TO ZERO” will be generated and stored in the fault log. Even though the calibration was unsuccessful, the car will not try to re-calibrate until a day passes.

Cancellation of the Sequence If at any time during the calibration sequence any of the following events occur, the car will exit the sequence, return to normal service and respond appropriately.

- The car is placed on Independent, Attendant, or Inspection.
- Fire Phase I, Fire Phase II, Medical Phase I, Medical Phase II, Emergency Power, or Seismic Operation is activated via dispatcher or car inputs.
- If the car is not empty or the calibration process is interrupted the car will keep trying until the calibration process is complete.

Setup The CAL output must be mapped to the car station board. The CAL output must be wired to the appropriate input on the K-Tech Sensor. The “Pretorq/Analog Ins” parameter must be set to either “Both” or “Inputs Only”. The “Auto calibration enabled” parameter must be set to Yes.

Installation

Before beginning installation, the car should be adjusted and running at contract speed. The cab should be complete, with all walls, ceiling panels, and flooring installed. If not, do not install the unit until the cab is complete.

Both K-Tech and EMCO systems are shipped from MCE with both original manufacturer and MCE installation documents. Follow the instructions in these documents.

Caution

Elevator control products must be installed by experienced field personnel. This manual does not address code requirements. The field personnel must know all the rules and regulations pertaining to the safe installation and running of elevators.

Controller Pretorque Setup

Before attempting this procedure, a learn trip must have been performed and the car must be running at contract speed.

1. Remove all weight from the car.
2. Disable the doors and run the car to the bottom floor. Leave the car on automatic operation.
3. Using the MPU keypad, access the car parameters menus. Go to the Motion Parameters menu and make sure that Drive Type is set correctly (page 10-22).
4. Exit the Motion Parameters menu.
5. Go to the Learn Trip, Floor Names, Pretorque menu (page 10-58). Access the Pretorque screen.
6. Move the cursor to Turn On Strain Gauge Calibration and press “0.” This will calibrate the load weigh unit.

The present weight value coming from the strain gauge is shown at the bottom of the screen. It should be around 22 counts (K-Tech) or 00 counts (EMCO).

7. Move the cursor to the item Weight Value: Bottom Empty. Enter the present weight value in the space after this item.

Note

If the present weight value from a K-Tech strain gauge is not close to 22 counts, the unit did not re-calibrate. Check to see if the “CAL” output from the Car Station board is properly connected. Confirm that the 110 VAC power supply to the unit is connected properly. Failure to wire the AC supply as shown will prevent the recalibration signal from working properly.

8. Move the cursor to the top section of the screen. Set the Pulse Height to -1000.
9. Move the cursor to the item Release Brake and Check For Rollback. Press and hold the “0” key.

10. After delay of about 5 seconds, the brake will lift. Observe the drive sheave. It may move slightly, either up or down.
11. Move the cursor to the Pulse Height item. If the car moved up, make the value more negative (try -1200). If the car moved down, make the value more positive (try 800).
12. Press and hold the “0” key to release the brake again. Observe the drive sheave. Modify the Pulse Height until the car holds zero speed when the brake is released. This value should be kept as close to zero as possible, but no movement of the car should be visible.

Note

The car should hold zero speed for at least several seconds. It may move slightly, either up or down, after that. This is normal and the speed should be very slow. Keep the value as close to zero as possible. Making the number too large will cause the car to ‘bump’ at take off.

13. Move the cursor to the lower screen section and save the pulse height that held the car at zero speed in the space after Pulse Height: Bottom Empty.
14. Exit to the main menu. Save the changes to system non-volatile memory.
15. Reset the MPU. Allow the system to power up normally and run the car to the top floor.
16. Access the parameters and go to the pretorque set up screen.
17. Add -200 counts to the value that held the car at zero speed at the bottom floor. If -1200 worked at the bottom floor, make Pulse Height -1400.
18. Move the cursor to Release Brake and Check For Rollback. Press and hold the “0” key and observe the drive sheave.
19. Edit the Pulse Height value until the car holds zero speed when the brake lifts.

Note

Keep the value as close to zero as possible. Making the number too large will cause the car to ‘bump’ at take off.

20. Move the cursor to the bottom section of the screen. Enter the value that held the car at zero speed into Pulse Height: Top Empty.
21. Move the cursor to the item Weight Value: Top Empty. Enter the value displayed after the item Present Weight Value.
22. Move the cursor to Weight of Load (lbs). Enter the rated capacity of the car here.
23. Exit to the main menu. Save the changes to system non-volatile memory.
24. Reset the MPU.
25. Allow the system to power up normally. Place full load in the car at the top floor.
26. Access the parameters and go to the pretorque set up screen.
27. Set Pulse Height to +2000.
28. Move the cursor to Release Brake and Check For Rollback. Press and hold the “0” key and observe the drive sheave.
29. Edit the Pulse Height value until the car holds zero speed when the brake lifts. If the car moves down, make the value larger. If it moves up, make it smaller.

Note

Keep the value as close to zero as possible. Making the number too large will cause the car to 'bump' at take off.

30. Move the cursor to the bottom section of the screen. Enter the value that held the car at zero speed into Pulse Height: Top Full Load.
31. Move the cursor to the Weight Value: Top Full Load. Enter the value displayed after the item Present Weight Value. It should be about 225 counts.
32. Exit to the main menu. Save the changes to system non-volatile memory.
33. Reset the MPU. Allow the system to power up normally. Remove the weights from the car.

Pretorque setup is now complete.

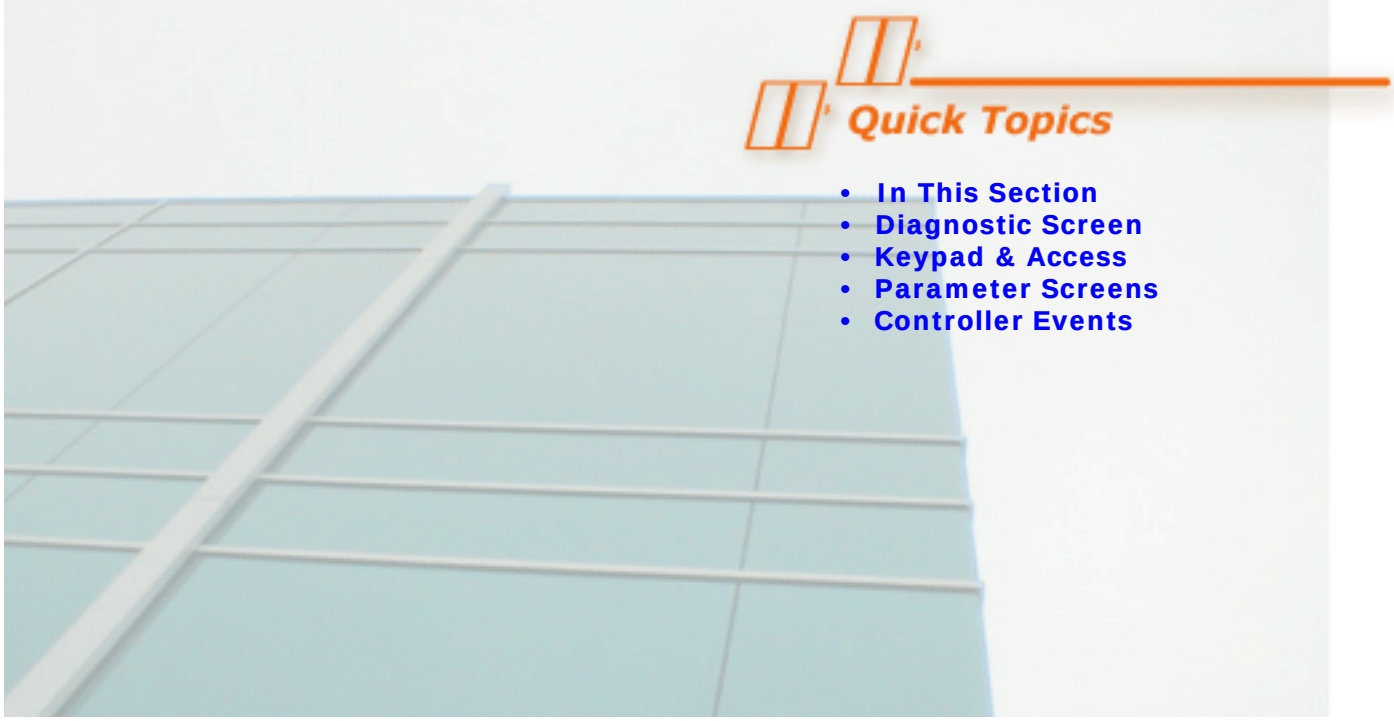

Diagnostics and Parameter Entry

In This Section

During normal operation, IntellaNet constantly monitors the status of control inputs and outputs on the display board screen. Active signals are displayed in reverse video. The display is also used to view and set car operating parameters:

- Diagnostic Screen
- Motion Parameters
- Brake and Hoistway Devices Parameters
- Car Operating Devices Parameters
- Door Parameters
- Fire, Emergency Power Parameters
- VIP, Medical, Earthquake Parameters
- Miscellaneous Parameters
- Simplex/Inc Riser Parameters
- Floor Names, PI Output, CE Voice Unit
- Event Disable Parameters
- Car Call Lock Entry
- Hall Lock Entry (Simplex/IR Only)
- Floor Landing Values
- Pretorque, Learn Trip
- Terminal Slowdowns
- Modem Parameters
- Password/Job Config/Time/Clear Events
- Controller Events

Diagnostic Screen

An example of a typical diagnostic screen is shown below. The diagnostic screen is displayed when the controller is powered up and running on normal operation. As shown in the sample screen, active signals are displayed in reverse video.

Figure 10.1 Diagnostic Screen Example

```
07:04:44 04/11/05 MONDAY     024
    60 BROAD STREET CAR PEI
  BC  1C  2C  3C  4C  5C  6C  7C
             WTA CME WTD WTB MGS
 BZI ATT UPB DNB BYPINDC DOB DCB
  SE  EE DCL DOL FKS RES FDH DDS
 SAF LIM  CG  DG REG PWA PRV BKR
 LEV  DZ INS IUP IDNMGSHDDSHDOBH
 EMG RECARECBRECCREC FBYFRLF
 LRNLMGSOSPD LDH
  IB  I1  I2  I3  I4  I5  I6  I7
 IC1 IC2 IC4 IC8IC16    UDACDDAC
 CAL UDG DDG DAL UALFRLC FPC BUZ
                 HDDCXXP CXP OXP
 APW RBK LEV EFX FFB     FRXCTOP
 IH1 IH2 IH4 IH8IH16IH32 UPG DNG
UDAHDDAHFRLH     ISV EML TCU ATL

SPEED-ACT 0000  DES  0000 DEV 000
EN 000000 LDG  1 HLDG     HDR
TR02 M01 L0 C02 000 02        488 % FL
SLOWDOWN FAILURE                HP030
SLWDNS: UP1 UP2 UP3 UP4 DN1 DN2 DN3 DN4
LIMIT SPEEDS:       ETS:+0000 NTS:+0000
LIMIT STATUS:DISABLED - INSPECTION ONLY
CONTROL STATUS:NORMAL
```

(Brightness Control)

Explanations of all displayed inputs and outputs follow in this section. Please refer to “Controller Inputs” on page 10-4. Please refer to “Controller Outputs” on page 10-12.

The diagnostic screen typically provides:

- Time, date, and day of the week, followed by an output that continuously reports the amount of time between data sent and received by the LON network processors. If the value is less than 60 counts, the system is operating properly. If the value gets too large, there may be a problem affecting communication between processors.
- Job address and car number.
- Car calls: When a car call button is pressed, the floor indicator will light momentarily. When the call is latched (acknowledged), the signal will light and remain so until the call is answered or cancelled.
- Car Station board input states. Note that the DCL, or door close limit, input on line 6 is on. This signal is highlighted when the door close limit switch indicates that the car door is closed. This may not be the true status of the door close limit switch. The signal may be reversed by the Car Station software so that it interfaces correctly with the MPU software.
- Controller inputs: These inputs may be on the Relay board or on an I/O card.

- Actual and desired car speeds followed by encoder deviation. Encoder deviation is the number of counts difference between where the door zone magnet was at the last floor stop versus where the encoder believes it should have been. Each count represents 1/16th of an inch. If the value ever reaches 10 or more counts, the car will shut down with an "Encoder Excess Deviation" fault. This would indicate that the encoder was losing or gaining counts.
- Present encoder position and landing indication. Note that when the car is in motion, the position output will be advanced from the true car position.
- Dispatcher signals: HLDG is the floor that the dispatcher desires the car to go to. HDR is the demand at that floor. If the car is being assigned to pick up a hall call, either U or D will be displayed. If the assignment at the floor is for the car to park and not open its doors, no direction will be shown. The flashing signal indicates that the car has communication with the dispatcher.
- %FL: The percentage of full load presently in the car. This value comes from the load weigher and will not be shown if the system is not set up for pretorque.
- TR status: TR status displays the target floor. Note that the number corresponds to the numerical value of the lowest floor (lowest floor = 1), not the floor name. The target floor is displayed whenever the car is moving. The current floor is displayed when the car is at rest.
- M status: M status indicates the present motion status of the car:
  - 0 = Just Stopped
  - 1 = Halted
  - 2 = Apply Power For Run
  - 3 = Release Brake For Run
  - 4 = Initialize DA For Run
  - 5 = Ramp UP
  - 6 = Transition To Plateau
  - 7 = Plateau
  - 8 = Decelerating
  - 9 = Stopping
  - 10 = Releveling
- L status: L status indicates the position of the car relative to floor level:
  - 0 = Not level
  - 1 = Door Zone
  - 2 = Level at floor.
- C status: C status represents the closest floor. The floor number corresponds to the numerical value of the floor (lowest floor = 1), not the floor name.
  - When running, this is the nearest floor at which the car can safely stop.
  - When the car is stopped, C status displays the current floor.
  - Software diagnostic indicators. MCE personnel use diagnostic values in software development.

- Status messages: Status messages indicate detected events. If the detected event requires that the control system shut down, the message on the bottom of the screen will annunciate the fault. If the system has detected an event that did not require a shut down, the most recent event is shown next. The “N” following the event number indicates that the event is no longer active. When an event is active, a “Y” is displayed. The next number is the floor that the car was on when the event occurred.
- Motion parameters in use: HP indicates that the control system is using high performance values. EC is displayed if the energy conservation values are in use.
- Terminal slowdown switches status: Active switches are highlighted.
- Terminal slowdown speeds for the cars present direction. Speed values are positive when the car is travelling up. The ETS speed is for the control system Emergency Terminal Stopping system. This system will drop the run outputs and open the safety circuit if the car has not slowed to a speed that will allow it to stop safely at the terminal floor. The NTS speed is for the system Normal Terminal Stopping system. This system will safely slow and stop the car at the terminal floor if the normal stopping means fails to do so. As the car gets closer to the terminal floor, both values will start to decrease. The ETS value will always be greater than the NTS value because the ETS value sets the speed at which the ETS system will trip based on the cars present position. Under normal operating conditions, the NTS and ETS systems will not affect car operation. They will only stop the car if it fails to slow down as it approaches the top or bottom terminals.
- Terminal slowdown system status: If a fault or event occurs in the terminal slowdown systems, it is displayed. When a terminal slowdown learn procedure is performed, procedure instructions are displayed.
- Control status. If a fault or event occurs, a message will be displayed here. “NORMAL” indicates that no events are presently active. Please refer to “Controller Event Descriptions” on page 10-63 for an explanation of relay board events.

Controller Inputs

Inputs to elevator equipment are monitored. When a pertinent input is active, its status is highlighted on the display screen in the elevator or dispatcher. Most inputs are non-latching. They are active while the condition exists or time out after a few seconds. Some inputs are latching.

Standard Inputs

Standard inputs to the IntellaNet controller include:

- AREC: One of three fire recall inputs (AREC/BREC/CREC) used to connect smoke or other fire detection equipment. For each input (A, B, or C), different recall floors may be programmed, accommodating various recall scenarios.
- ATT: Attendant. When activated, usually by a key switch, places the car in Attendant service mode. Settings on several parameter screens affect car door, button, susceptibility to recall, and other behavior while on Attendant mode. In this mode, an in-car attendant controls travel direction and floor stops.
- BKR: Brake Released. When active, indicates that the machine brake has been picked (released). Usually monitors a microswitch that closes when the brake is picked.
- BREC: See AREC.
- BYP: Attendant Bypass. When active, removes the car from Attendant mode operation regardless of the state of the ATT (Attendant mode) input.

- BZI: Buzzer Inhibit. When active, prevents the floor-passing buzzer or chime from sounding.
- 1C (1CF) - nC (nCF): Indicates a car call has been latched for the specified floor. The “F” is appended if the installation has both front and rear car operating panels/openings.
- CG: Car Gate. Informs the controller when the car gate switch is closed.
- 1CR - nCR: A car call to the specified floor has been registered on the rear car operating panel.
- CREC: See AREC.
- DCB or DCBF: Door close button front. The “F” will be appended if the car has both front and rear doors.
- DCBR: Door close button rear.
- DCL or DCLF: Door Close Limit (Front). Informs the controller that the front door close limit input is active. The “F” will be appended if the car has both front and rear doors.
- DCLR: Door Close Limit Rear. Informs the controller that the rear door close limit input is active.
- DDS: Door Disconnect Service (cartop Inspection active). When the car is placed on cartop inspection, this input is flagged and Door Disconnect Service conditions apply. Please refer to “Relay Board Switches” on page 3-6.
- DDSH: Door Disconnect Service (from Relay Board switch). Indicates that the Disable Doors switch on the Relay Board is active. Door Disconnect Service conditions apply. Please refer to “Relay Board Switches” on page 3-6.
- 1D (1DF) - nD (nDF): Front down hall call at specified floor. (Simplex cars only.) The “F” will be appended if the installation has both front and rear down hall calls.
- DG: Door Gate. Indicates that the front (and/or rear) hall door gate switch is closed.
- DNB: Down Attendant Button. When the car is on Attendant service, indicates that the down direction “button” is active.
- DOB (DOBF): Door Open Button Front. Indicates that the front door open button input is active. The “F” is appended if the car has both front and rear doors.
- DOBH: (Emergency) Door Open switch on Relay Board is active. Please refer to “Relay Board Switches” on page 3-6.
- DOBR: Door Open Button Rear. Indicates that the rear door open button input is active.
- DOL (DOLF): Door Open Limit (Front). Informs the controller that the front door open limit input is active. The “F” will be appended if the car has both front and rear doors.
- DOLR: Door Open Limit Rear. Informs the controller that the rear door open limit input is active.
- 1DR - nDR: Rear Down hall call at specified floor. (Simplex car only.)
- DZ: Door Zone. Indicates that the car is in the door zone.
- EC: Energy Conservation. When active, this input directs the controller to run the car according to its Energy Conservation speed curve. This curve is generally used during off-peak traffic hours when conserving power may be more desirable than achieving minimum floor-to-floor times. Simplex car only.
- EE (EEF): Electric Eye (Front). Indicates that the electric eye (photo sensor) input for the front door is active. (The beam has been interrupted.) The “F” is appended if the car has both front and rear doors.

- EER: Electric Eye Rear. Indicates that the electric eye (photo sensor) input for the rear door is active.
- EMG: Emergency Power input. When active (input polarity is user-selectable), indicates that the controller is operating on emergency power. Depending on the sophistication of the emergency power system, this input may be automatically activated by external power equipment or may be a mechanical switch set by a human after emergency power has been applied to the system. When this input is active, the group will begin the emergency power sequence.
- FDH: Fire Door Hold. Indicates that the car is at the fire recall floor with doors held open pending activation of the in-car firefighter switch. The car will not respond to car call buttons until the firefighter switch is activated. The car will not respond to hall call demand while on fire service.
- FKS: Firefighter Key Switch. Indicates that the in-car firefighter switch is active.
- FBY: Fire Bypass input. In some jurisdictions, code allows a “Bypass” position on the fire recall switch. The three positions of the switch will be Bypass, Off, and On. Setting the three-position recall switch to Bypass will cause normal elevator service to be restored regardless of the status of the smoke detector inputs AREC, BREC, and CREC. Setting the switch to the Off position will allow normal elevator service when all Phase I switches are in the off position. Setting the switch to the On position will cause fire operation Phase I from the main recall switch by triggering the REC input. In jurisdictions where a Bypass position on the fire recall switch is not required, this input is left unconnected. Setting the recall switch to On places the cars in fire service from the main recall switch by triggering the REC input. Setting the switch to Off will allow normal elevator operation when all Phase I switches are in the off position. Please refer to “Fire and Emergency Power Parameters” on page 10-36 for more information.
- FRST: Fire Reset switch (ANSI/ASME 2000 Code only). In jurisdictions which adopted the ANSI/ASME 2000 code, the fire recall switch has three positions, Reset, Off, and On. Setting the switch in the On position will cause fire operation Phase I from the main recall switch by triggering the REC or RECA input, if two fire recall switches are present. If the switch is in the Reset position, it allows the cars to return to normal service if all fire alarm initiating devices are off (REC, RECA, AREC, BREC, CREC are not active. If any detector input is still on, the cars will remain in fire service. Once all alarm initiating devices are not active, the switch can be turned from the Reset to the Off position to allow normal operation to resume.
- GIN: Generator Input. Indicates that the emergency power generator is running (if applicable).
- HP: High Performance. When active, this input directs the controller to run the car according to its High Performance speed curve. This curve is generally used during peak traffic hours when conserving power may be less important than achieving minimum floor-to-floor times. Simplex car only.
- IDN: Inspection Down. Indicates that the car is travelling down in Inspection mode. Used in installations with power closing car doors.
- INDC: Independent operation. Indicates that the car is in Independent mode and will not respond to hall call demands. Please refer to “Car Operating Devices Parameters” on page 10-30.
- INS: Inspection. Indicates that the car is in Inspection mode.

- IUP: Inspection Up. Indicates that the car is travelling up in Inspection mode. Used in installations with power closing doors.
- LEV: Level input. Indicates that the car level input is active.
- LIM: Limit input. Indicates that the Limit Board has tripped. The car has exceeded the maximum allowed speed in its current operating mode and will perform an emergency stop by dropping the brake and motor contactors.
- LMGS: Lobby Return (followed by) Motor/Generator Shutdown. Indicates that the LMGS input is active. The car will return to the lobby and shut down the motor/generator. Please refer to “Brake and Hoistway Devices Parameters” on page 10-27.
- LRN: Lobby Return. Indicates that the Lobby Return input is active. The car will return to the selected lobby floor. Please refer to “Brake and Hoistway Devices Parameters” on page 10-27.
- MGS: Motor Generator Switch (in car) input. Indicates that the in-car motor generator switch has been activated. The motor/generator set will be shut down.
- MGSH: Motor Generator Switch (on Relay Board) input. Indicates that the relay board motor generator switch has been activated. The motor/generator set will be shut down.
- OSPD: Overspeed. Indicates that the car has exceeded the overspeed limit (set on the Motion Parameters screen) and that the overspeed input is active. (Input polarity is user-selectable on the Brake and Hoistway Devices Parameters menu.) The car will drop brake and motor contactors and perform an emergency stop.
- PRV: Contactor Proving. Along with the PWA input, monitors the status of brake, motor, and other contactors through a relay proofing signal to P2-3 of the relay board. (Main relays are functioning properly.) This input will normally go active prior to a run.
- PWA: Power Applied. Along with the PRV input, monitors the status of brake, motor, and other contactors through a power proofing signal to P2-4 of the relay board. Input polarity selectable on Miscellaneous Parameters menu. This input will normally go active prior to a run.
- REC: Recall. Indicates that the Main Fire Recall switch is active and that fire Phase I recall has been initiated.
- REG: Indicates that a motor drive fault is active through a signal connection at relay board P4-8.
- RES: Reset. Indicates that the fire recall switch has been reset. The smoke detector AREC, BREC, and CREC inputs will also reset.
- SAF: Safety. When active, indicates that the safety string has opened. The car will immediately perform an emergency stop, dropping brake and motor contactors.
- SE (SEF): Safety Edge (Front). Indicates that the front safety edge has been engaged. The “F” is appended if the car has both front and rear doors.
- SER: Safety Edge Rear. Indicates that the rear safety edge has been engaged.
- 1U (1UF) - nU (nUF): Front up hall call at specified floor. The “F” is appended if the installation also has rear up hall calls.
- UPB: Up Attendant Button. When the car is on Attendant service, indicates that the up direction “button” is active.
- 1UR - nUR: Rear up hall call at specified floor.

- WTA: Weight Switch Anti nuisance. On jobs with pre-torque, indicates that the anti nuisance settings associated with load weigher vs. number of calls settings have been exceeded. Refer to the Car Operating Devices menu for more information.
- WTB: Weight Bypass. If the load in the car exceeds the percentage of full load (byp) entered on the Car Operating Devices menu, hall calls will be ignored until loading is reduced.
- WTD: Weight Dispatch. If the load in the car exceeds the percentage of full load (disp) entered on the Car Operating Devices menu, the car will begin closing its doors and preparing to depart the floor to prevent overloading.

Optional Inputs

The following inputs are present only on jobs with the associated optional equipment or mode of operation.

- AB: Alarm Bell. Indicates that the car emergency switch is active and the associated alarm is sounding.
- ALD: Alternate Dispatcher (Swing Car): Indicates that the car is under the control of an alternate dispatcher.
- ALDH: Alternate Dispatcher (Swing Car, Relay Board Input): Indicates that the car is under the control of an alternate dispatcher but is currently being run on Inspection from the car relay board.
- ATTH: Attendant (from relay board). The car has been placed on Attendant mode by a relay board input. Settings on several parameter screens affect car door, button, susceptibility to recall, and other behavior while on Attendant mode. In this mode, an in-car attendant controls travel direction and floor stops.
- CME: Car Medical Emergency. Indicates that the car is operating in medical emergency mode (code blue) and that the in-car medical emergency switch has been activated. (Medical personnel are controlling the car.)
- CMH: Car Medical Emergency Hold. Indicates that the car is operating in medical emergency mode (code blue) and is being held at a floor in readiness for medical emergency use.
- CWL: Counterweight Latch. Indicates that the counterweight derailment switch is active but that the car will respond to fire recall. Car behavior under seismic conditions is determined by settings on the VIP, Medical, Earthquake parameters menu.
- CWSW: Counterweight Switch. Indicates that the counterweight derailment switch is active and the car is running at reduced speed (120fpm) until the seismic reset switch is activated.
- DHL (DHLF): Door Hold (Front). Indicates that the front door is being held. Typically used with freight elevators in instances where the door must remain open for an extended period of time. The “F” is appended in installations with both front and rear doors.
- DHLR: Door Hold Rear. Indicates that the rear door is being held. Typically used with freight elevators in instances where the door must remain open for an extended period of time.

- EB1 - EB10: Emergency Bus inputs. In installations where multiple groups share emergency power sources or where emergency power sources are shared between groups, these inputs (and associated outputs BR1 - BR10) allow the system to equitably "share" access to limited power.
  Each "bus" represents enough power to run one car. When setting up emergency power parameters, the assignments and selections you make are used by the dispatcher(s) to determine emergency power capacity and the usage priorities you want applied. Please refer to "Fire and Emergency Power Parameters" on page 10-36 for more information.
- EP: Emergency Power (select): Indicates that the emergency power manual select switch is active, allowing the car to be placed in emergency power phase 1 or phase 2. To manually select the car for emergency power phase 1, the MRET input must be activated.
- FDT (FDTF): Freight Door Time (Front). Indicates that the freight door time input is active, extending the front door dwell time to allow extra time when freight is being loaded or unloaded from the car. The "F" is appended in installations that have both front and rear doors.
- FDTR: Freight Door Time Rear. Indicates that the freight door time input is active, extending the rear door dwell time to allow extra time when freight is being loaded or unloaded from the car.
- FI1: Control fuse
- FI2: Governor switch
- FI3: Loop overload
- FI4: Pit stop switch
- FI5: Compensation cable switch
- FI6: Bottom final limit
- FI7: Top final limit
- FI8: Controller stop switch
- FI9: Top of car stop switch
- FI10: Escape hatch
- FI11: Side exit door
- FI12: Safety plank switch
- FI13: In car stop switch
- FI14: Limit board
- FI15: Hoist motor field
- FI16: Tripped SCR/regulator
- FI17: Front door locks open in door zone
- FI18: Rear door locks open in door zone
- FI19: Front gate switch open in door zone
- FI20: Rear gate switch open in door zone
- FI21: Spare
- FI22: Spare
- FI23: Spare
- FI24: Spare

- FOK: Field OK (MG only): If any contacts feeding the Start-Run circuit (Regulator Fault, Hoist Motor Field Current Protection, RPR, Loop Overload, or AC Overload) open, this input is turned off in order to prevent the controller from trying to start the MG under these conditions.
- FRLF: Fire Recall Light Flash. Indicates that the Fire Recall Light Flash input is active. The fire recall light will flash rather than remaining steadily on.
- FST: Fireman Start. Australia only. Indicates that the in-car firefighter input is active. The car is under the active control of firefighters.
- HBF: Hall Button Failure. Simplex or Inconspicuous Riser cars only. The controller monitors hall call bus power. If power is lost, typically caused by an opened fuse, this input will be activated and HBF highlighted on the status display. To preserve service under these conditions, cars will run continuously, automatically servicing alternate floors in the down direction and lobby and top landings in both directions. (Odd and even numbered floors are alternated in the down direction; lobby and top floors are serviced in both directions. Sometimes called “wild” service.)
- 1HL - nHL: (Front) Hall Call Lock at specified floor. Simplex car only.
- 1HR - nHR: Rear Hall Call Lock at specified floor. Simplex car only.
- HLOF: When active, the HLOF input allows hall call override on simplex cars. The HLOF input honors the same polarity as the LKO input.
- HSP: Hospital. Indicates that the car is operating in Hospital (Medical Emergency/Code Blue) mode.
- INDH: Independent operation initiated by relay board input. Indicates that the car is in Independent mode and will not respond to hall call demands. Please refer to “Car Operating Devices Parameters” on page 10-30.
- LDH (LDHF): Lobby Door Hold (Front). Indicates that the front door lobby door hold input is active. The “F” is appended if the car has both front and rear doors.
- LDHR: Lobby Door Hold Rear. Indicates that the rear door lobby door hold input is active.
- 1L (1LF) - nL (nLF): Front car call locked at specified floor. The “F” is appended if the car has both front and rear doors. May also appear as 1LK - nLK.
- LKO: (Car Call) Lockout Override. Indicates that car call lockouts have been overridden by switch input or by operating mode related settings (i.e., fire service, etc.).
- LKS: (Car Call) Lockout Shuttle. Indicates that the car is operating in shuttle (Shuttle/Holiday) service, initiated by switch or timer. The car will automatically service certain floors (as determined by factory programming per job survey specifics). Car calls are disabled in this operating mode.
- 1LR - nLR: Rear car call locked at specified floor.
- LRN2: Lobby Return 2. Indicates that the car is being returned to the lobby and that doors will be held closed after lobby arrival.
- 1M (1MF) - nM (nMF): Front medical emergency recall to specified floor. The “F” is appended if the car has both front and rear doors. Simplex car only.
- 1MR - nMR: Rear medical emergency recall to specified floor.
- MRET: Manual Return (Emergency Power). Indicates that the car has been manually selected for emergency power operation and is currently recalling to the designated floor.
- NDN: Normal Down (Limit). Indicates that the normal down limit switch is open.

- NPWR: Normal Power. Indicates that the car has returned to operating on normal power after a period of emergency power operation. Indication will time out automatically.
- NUP: Normal Up (Limit). Indicates that the normal up limit switch is open.
- OFFL: Lobby Recall Switch Off. Canadian Fire Code, Simplex car only.
- OFFR: Remote Recall Switch Off. Canadian Fire Code, Simplex car only.
- OL: Overload. Indicates that the car is loaded in excess of the percentage of load capacity specified as maximum load.
- OSVC: Out of Service. Indicates that the car is out of service.
- PH2E: Phase 2 Emergency (Power). Indicates that emergency power phase 2 is active for split feeder or linked groups emergency power configuration. Please refer to “Fire and Emergency Power Parameters” on page 10-36.
- PTS: (Emergency Power) Pretransfer. Indicates that the pre transfer switch input has been activated. When activated, this input causes the car to direct a normal stop at the next available floor in the direction of travel. Car is held at the floor until either normal commercial power is restored and normal operation can begin, or until emergency power is made available. Also used for testing the transfer from normal commercial power to emergency generator power.
- RECA: Recall Automatic. Indicates active fire recall initiated by smoke detector. ANSI/ASME 2000 Code only.
- RECL: Recall Lobby. Indicates the lobby fire recall switch is on. Canadian Fire Code, Simplex car only.
- RECR: Recall Remote. Indicates remote fire recall switch is on. Canadian Fire Code, Simplex car only.
- RET: (Emergency Power) Return. Indicates that emergency power Phase 1 recall is enabled. Split feeder or linked groups emergency power, Simplex car only.
- RET1: (Emergency Power) Return (Phase) 1. Indicates that emergency power Phase 1 recall is complete. Split feeder or linked groups emergency power, Simplex car only.
- RET2: (Emergency Power) Return (Phase) 2. Indicates that the car has been selected to operate on emergency power. Split feeder or linked groups emergency power, Simplex car only.
- RSP: Reduce Speed. Indicates that the car is operating at reduced speed. Used under high wind conditions in high rise buildings.
- RSX: Reset Hall Calls. When activated, local hall calls on the simplex/inconspicuous riser are dropped.
- SAB: Sabbath (Operation). Indicates that the car is operating in shuttle Sabbath service, initiated by switch or timer. The car will automatically service certain floors (as determined by factory programming per job survey specifics).
- SABO: Sabbath Override. Indicates that Sabbath operation has been overridden by switch or operating-mode (i.e., fire service) activation.
- SEC: Security. When active, indicates that the optional security access code feature is active on this controller.
- SRES: Seismic Reset. Indicates that the Seismic Reset button (Rope Gripper board) has been activated. Indication will automatically time out.
- TOP: Test Operation. Indicates that the elevator is operating in Test mode. See Section 13 of this manual.

- WTB1: Weight Bypass 1. As WTB, but operates when the car is in the lower half of the shaft.
- WTB2: Weight Bypass 2. As WTB, but operates when the car is in the upper half of the shaft.
- WTS: Weight Special. Indicates that an input activating both WTB and WTS functions is active.
  - WTB: Weight Bypass. If the load in the car exceeds the percentage of full load (byp) entered on the Car Operating Devices menu, hall calls will be ignored until loading is reduced.
  - WTD: Weight Dispatch. If the load in the car exceeds the percentage of full load (disp) entered on the Car Operating Devices menu, the car will begin closing its doors and preparing to depart the floor to prevent overloading.

Controller Outputs

Controller outputs are monitored. When a pertinent output is active, its status is highlighted on the display screen in the elevator or dispatcher. Most outputs are non-latching. They are active while the condition exists or time out after a few seconds. Some outputs are latching.

Standard Outputs

Standard status outputs to the IntellaNet controller include:

- APW: Apply Power. Indicates that feedback from motor and brake components confirms that machine and brake controller outputs are active.
- BUZ: Buzzer. Indicates that the buzzer output from the Car Station board is active.
- CXP (CXF): Door close motor (front). Indicates that the CXP (front door closing pilot) output from the Car Station board is active.
- CXR: Door close motor rear. Indicates that the CXR (rear door closing pilot) output from the Car Station board is active.
- CXXP (CXXF): Front door close, nudging speed. Indicates that the CXXP (front door nudging speed closing pilot) output from the Car Station board is active.
- CXXR: Rear door close, nudging speed. Indicates that the CXXR (rear door nudging speed closing pilot) output from the Car Station board is active.
- DAL: Down Attendant Light. Indicates that the Down Attendant Light output from the Car Station board is active.
- DCLX: Verification of door close limit. Generated output verifying that the front and/or rear door close limit input has been received by the Car Station board.
- DDAC: Down Direction Arrow in Car. Indicates that the DDAC (down direction indicator light) output from the Car Station board is active.
- DDAH: Down Direction Arrow in Hall. Indicates that the DDAH (down direction indicator light) output from the #1, 16-Channel I/O board in the controller is active.
- DDG: Down Direction front Gong/Lantern. Indicates that the DDG (car lanterns) output from the Car Station board is active.
- DNG: Advanced Down Direction front Gong/Lantern. Indicates that the DNG (DWN) output from the #1, 16-Channel I/O board in the controller is active.
- DWN: Down Direction relay.

- EFX: Field Forcing Relay. SCR drive controllers only. Indicates that the motor field forcing output is active.
- EML: Emergency Power Light in lobby or machine room. Indicates that the car is shut down on emergency power phase 2.
- FFB: Field Forcing Relay A. SCR drive controllers only. Indicates that field forcing relay A is closed.
- FPC: Floor Passing Chime. Indicates that the FPC (passing chime) output from the Car Station board is active.
- FRLC: Fire Light in Car. Indicates that the FRLC (car fire light) output from the Car Station board is active. This output is activated if a smoke detector or fire recall switch input is activated to alert passengers that the car is in fire operating mode.
- FRLH: Fire Light in Hall. Indicates that the FRLH (hall fire light) output from the #1, 16-Channel I/O board in the controller is active. This output is activated if a smoke detector or fire recall switch input is activated to alert waiting passengers that the car is in fire operating mode.
- FRX: Fire Return (Stop Switch) Bypass. Generated status output indicating that the Phase I fire recall is overriding the emergency stop switch in the car.
- GRN: Generator Run Output. Jobs with emergency power generators only. Indicates that emergency power is being received from the backup generator.
- IC1 - IC32: Binary floor position indicator, in car.
- IH1 - IH32: Binary floor position indicator, in hall. Hall Lantern PI board.
- LEV: Indicates that the car is leveled, in the door zone.
- MEL: Medical Emergency Light. Indicates that the output used for the medical emergency light is active.
- OXP (OXF): Door open motor (front). Indicates that the OXP (front door opening pilot) output from the Car Station board is active. The “F” is appended if the job has both front and rear doors.
- OXR: Door open motor (rear). Indicates that the OXR (rear door opening pilot) output from the Car Station board is active.
- RBK: Release Brake. Indicates that the brake is picked (released).
- TCU/TCN: This Car Up/This Car Next.
- UAL: Up Attendant Light. Indicates that the Up Attendant Light output from the Car Station board is active.
- UDAC: Up Direction Arrow in Car. Indicates that the UDAC (up direction indicator light) output from the Car Station board is active.
- UDAH: Up Direction Arrow in Hall. Indicates that the UDAH (up direction indicator light) output from the #1, 16-Channel I/O board in the controller is active.
- UDG: Up Direction Gong/Lantern. Indicates that the UDG (car lanterns) output from the Car Station board is active.
- UP: Up direction relay.
- UPG: Advanced Up Direction Gong/Lantern. Indicates that the UP (UPG) output from the #1, 16-Channel I/O board in the controller is active.

Optional Outputs

- AB: Alarm Bell.
- ATL: Attendant Light. Indicates that the Attendant Light output is active. This output is typically used to drive an external indicator.
- BR1 - BR10: Emergency Bus outputs. In installations where multiple groups share emergency power sources or where emergency power sources are shared between groups, these outputs (and associated inputs EB1 - EB10) allow the system to equitably "share" access to limited power.
  Each "bus" represents enough power to run one car. When setting up emergency power parameters, the assignments and selections you make are used by the dispatcher(s) to determine emergency power capacity and the usage priorities you want applied. Please refer to "Fire and Emergency Power Parameters" on page 10-36 for more information.
- BYL: (Hall Call) Bypass Light. Indicates that hall calls are being bypassed because of a dispatcher communications failure.
- CAL: Calibration. (Zero K-Tech loadweigher sensor.) The load weigher has an auto-calibrating feature. Periodically, this output indicator will be highlighted as the load weigher self-calibrates.
- CCA: Car Call Annunciator. Indicates that the audio (or visual) car call "announce" output is active.
- CTOP: Car Top Inspection (after seismic phase 1). The car is in Hoistway Door Bypass or Car Door Bypass modes. Please refer to "The Rope Gripper Board" on page 3-11. The car can only be operated on inspection from the cartop or in-car station.
- CWL: Counterweight Light. Indicates that the counterweight light output is active.
- CWLC: Counterweight Light in Car. Indicates that the in-car counterweight light output is active.
- 1DA - nDA: Down Annunciator light, front outputs.
- D1 (DF1) - Dn (DFn): Front directory light for specified floor.
- DDGR: Down Direction Gong/Lantern Rear.
- DNGR: Advanced Down Direction Gong/Lantern Rear.
- DR1 - DRn: Rear directory light for specified floor.
- 1DX - nDX: Down Annunciator light, rear outputs.
- EC: Energy Conservation. Indicates that the car is operating in energy conservation mode.
- ECL: Energy Conservation Light. Indicates that the output for an external indicator of energy conservation mode operation is active.
- EM2: Emergency Power Light in lobby or machine room. Indicates the car emergency power status.
- EMLC: Emergency Power Light in Car. Indicates that the car is shut down on emergency power phase 2.
- EMP: Emergency Power. Car acknowledges emergency power feeder is on emergency generator. Split feeder or linked groups emergency power, Simplex car only.
- EQL: Earthquake Light. Indicates that the output driving an external earthquake indicator light is active.
- FAN: Indicates that the car fan output is active. (Fan is running.)

- FDL: Indicates that the output driving an external freight door open indicator light is active.
- FIR: For ANSI/ASME 2000 Code installations only, indicates that Fire Phase I recall is active.
- HDD (HDDF): Heavy Duty Door (Front). Indicates that the door opener is actively applying extra torque to operate the doors. The Car Operating Devices menu allows up to three floors to be designated as requiring additional door power because of heavy hall doors or wind loading.
- HDDR: Heavy Duty Door Rear. Indicates that the door opener is actively applying extra torque to operate the doors. The Car Operating Devices menu allows up to three floors to be designated as requiring additional door power because of heavy hall doors or wind loading.
- HP: High Performance. Indicates that the car is operating in high performance mode.
- IB1 - IB32. Binary (position) Indicator outputs.
- INL: Independent Light. Indicates that the car is operating in Independent mode.
- ISV: In Service Light. Indicates that the car is operating in normal passenger mode.
- IX: Express position indicator. Indicates that the car is passing a “blind shaft” magnet in the hoistway. These magnets are used to identify “floors” at which this elevator has no door opening.
- LAUT: Indicates a smoke detector has activated Fire Phase I recall. Canadian cars only.
- LMAN: Indicates a manual switch has activated Fire Phase I recall. Canadian cars only.
- L1 (LF1) - Ln (LFn): Front directory light for specified floor.
- LR1 - LRn: Rear directory light for specified floor.
- MELC: Medical Emergency Light in Car. Indicates that the output driving the medical emergency indicator light in the car is active.
- MGL: Motor Generator Light.
- NCU: Next Car Up.
- OCN: Other Car Next.
- OLL: Overload Light. Indicates that the output driving an overload indicator light or buzzer is active.
- OSV: Out of Service. Indicates that the output driving an out of service indicator light or buzzer is active.
- PIF: Position Indicator Flash. Indicates that the car has been delayed at the floor.
- PIX: Position Indicator Disable. Indicates that the position indicators have been disabled because the car is in fire service mode. ANSI/ASME 2000 code installations only.
- RC (RCF): Retiring Cam Front. Indicates that the front retiring cam output is active. The “F” is appended for cars with both front and rear doors.
- RCR: Retiring Cam Rear. Indicates that the rear retiring cam output is active.
- RET1: Linked simplex car or dispatcher has completed Emergency Power Phase 1 (recall).
- RET2: Linked simplex car or dispatcher has completed Emergency Power Phase 2 (cars assigned to run).
- RTD: This car has finished Emergency Power Phase 1 recall (split feeder or linked groups emergency power).

- SABL: Sabbath Light. Indicates that the output driving an external Sabbath operating mode indicator is active.
- SALC: Seismic Alarm Light in Car. Indicates that the output driving a seismic alarm indicator light in the elevator car is active.
- SCRL: SCR light.
- SECL: Security/access active light.
- SERV: Alternate dispatcher swing car light.
- TCD: This Car Down.
- 1UA - nUA: Up annunciator light for specified floor.
- UDGR: Up Direction Gong/Lantern Rear.
- UPGR: Advanced Up Direction Gong/Lantern Rear.
- 1UY - nUY: Up annunciator light rear output for specified floor.
- WBB: Weight Bypass Buzzer. Indicates that the output driving a buzzer indicating that hall calls are being bypassed due to an overloaded car is active.
- WBL: Weight Bypass Light. Indicates that the output driving a light indicating that hall calls are being bypassed due to an overloaded car is active.
- WBLC: Weight Bypass Light in Car. Indicates that the output driving an in-car light indicating that hall calls are being bypassed due to an overloaded car is active.

Using the Keypad & Accessing Screens

The display card keypad is used to access parameter, diagnostic, fault, and scope screens. The three primary keys used to move the cursor and enter values are the “?”, “0”, and “#” keys:

- * Key = Move cursor left (previous).
- 0 Key = Value of zero when entering numeric values.
  - Toggles between Yes and No for logical values.
  - Acts as an “Enter” button to change screens or save values to memory.
- # Key = Move cursor right (next).

Entering Car Calls

To place a car call:

1. Press the ‘#’ key or the ‘*’ key until the desired floor is highlighted.
2. Press the ‘0’ key. Hold the key until the car begins to move if the car is on Independent Service.

Note

A highlighted “C” next to a floor car call means that the car call is locked out. This cannot be bypassed using this call method. When the cursor is not in the upper right hand corner of the I/O screen, only the main screen can be displayed. No fault or speed curve screens can be viewed.

Danger

Elevator control products must be installed by experienced field personnel. This manual does not address code requirements. The field personnel must know all the rules and regulations pertaining to the safe installation and running of elevators.

Controller Fault and Event Listing

Irrecoverable faults appear at the bottom of the screen. The most recent event is displayed last. A list of the last 100 controller events is located in the car event log. To view the event log:

- Move the cursor to the upper right hand corner of the status display.
- Press the “0” button.

Controller Event Log

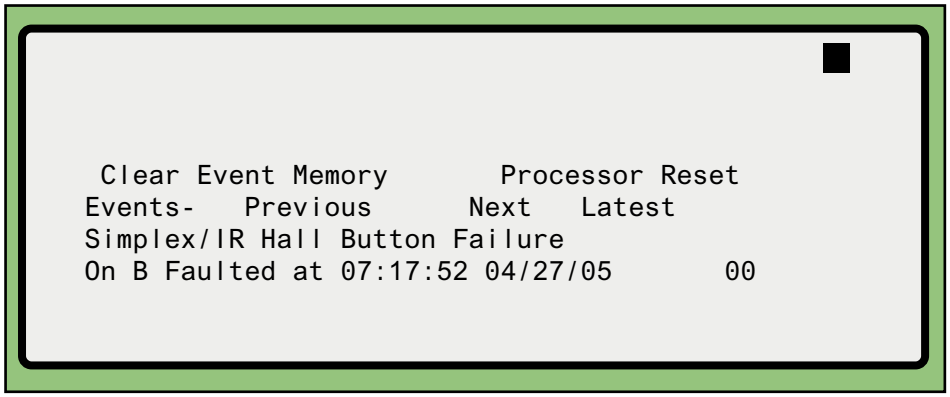

The controller event log displays events beyond the last 100 displayed on the diagnostic screen. Hall calls will be located on this screen for simplex cars and calls may be entered in the same fashion as on the diagnostic screen. To access a particular log:

- Move the cursor to Previous, Next, or Latest.
- Press the ‘0’ key.

To clear the event log:

- Move the cursor to Clear Event Memory.
- Press the ‘0’ key.

To reset the MPU:

- Move the cursor to Processor Reset.
- Press the ‘0’ key.

To exit the screen:

- Move the cursor to the upper right hand corner.
- Press any number key (0-9) twice to return to the status screen.
- (A single press will take you to the scope display screen.)

Note

The “Events Detected” message on the diagnostic screen will still display the most recent events. The only way to remove the message is to reset the MPU.

Relay Board Events

The present status of the relay board is displayed on the diagnostic screen. If an event is active, a message indicates the status. The following table lists Relay Board events.

Table 10.1 Relay Board Events

Relay Bd Event	Cause	Corrective Action
FRX_MON Fault	FRX_MON input is high when the processor is not demanding outputs FRX or FRXA be on.	Outputs FRX and FRXA are only turned on to bypass the stop switch on fire recall phase I. If the FRX_MON input is on, there is a failure of one or both of the outputs. The relay board must be replaced.
GAC_MON Fault	GAC_MON input is high when the processor is not demanding outputs GAC or GACX be on.	Outputs GAC and GACX are only turned on by the relay board to bypass the gate switch for hoistway access. If the GAC_MON input is on, there is a failure of one or both of the outputs. The relay board must be replaced.
G_MON Fault	G_MON input is on when the car door (gate) switch is turned off and the processor is not demanding the 'GBYP' output be on.	The G_MON input monitors 'G' relay and 'GBYP' output status. If the G_MON input and the 'GATE' inputs do not agree when the relay board is not demanding the 'GBYP' output be on, the relay board will declare a G_MON fault. Likely causes are a bad 'G' relay, bad 'GBYP' output or a failed 'GATE' input. Replace the 'G' relay. If the problem persists, replace the relay board.
BAC_MON Fault	BAC_MON input is high when the processor is not demanding outputs BAC or BACX be on.	Outputs BAC and BACX are only turned on by the relay board to bypass the bottom floor door lock for hoistway access. If the BAC_MON input is on, there is a failure of one or more of the outputs. Replace the relay board.
TAC_MON Fault	TAC_MON input is high when the processor is not demanding outputs TAC or TACX be on.	Outputs TAC and TACX are only turned on by the relay board to bypass the top floor door lock for hoistway access. If the TAC_MON input is on, there is a failure of one or more of the outputs. Replace the relay board.
DZ_MON Fault	The DZ_MON input is high when the door zone input is turned off.	The DZ_MON input monitors 'DZ' relay status. If the input is on when the Door Zone input is off, the likely cause is a bad 'DZ' relay Door Zone input. Replace the relay. If the problem persists, replace the relay board.
SR_MON Fault	The SR_MON input is high when the processor is demanding the 'APW' output be off.	The SR_MON input monitors 'SR' relay status. If the input is on when the 'APW' output is off, the likely cause is a bad 'SR' relay or jumper on the controller. Replace the 'SR' relay. If the problem persists, check for a jumper or short across contacts 11 and 7 of 'SR'. If no short is found, replace the relay board.
B_MON Fault	The B_MON input is high when the processor is demanding the 'RBK' output be off.	The B_MON input monitors 'B' relay status. If the input is turned on when the 'RBK' output is off, the likely cause is a bad 'SR' relay or jumper on the controller. Replace the 'SR' relay and, if the problem persists, check for a jumper or short across contacts 11 and 7 of 'SR'. If no short is found, replace the relay board.
EN_MON Fault	The EN_MON input is high when the processor is demanding the 'RE' output be off.	The EN_MON input monitors 'RE' output state. The processor turns on 'RE' after the gate circuit is made up just before turning on the 'APW' output. The 'RE' output staggers relay circuitry so the processor can check 'G' relay contact prior to allowing 'DL' to close. Check for a jumper or short across the 'RE' output. If no short is found, replace the relay board.
Proving Fault	The PRV and/or PWA inputs have not gone high before a run has been demanded.	PRV and PWA inputs monitor various controller contactors. The relay board needs to see both of these inputs on before the car can run. Check the PRV and PWA inputs on the diagnostic monitor. If both are on, try to run the car on inspection. If the problem persists, replace the relay board.

Scope Screen

The scope screen is accessed from the Event Log:

- Move the cursor to the upper right hand corner of the Event Log.
- Press the '0' key.

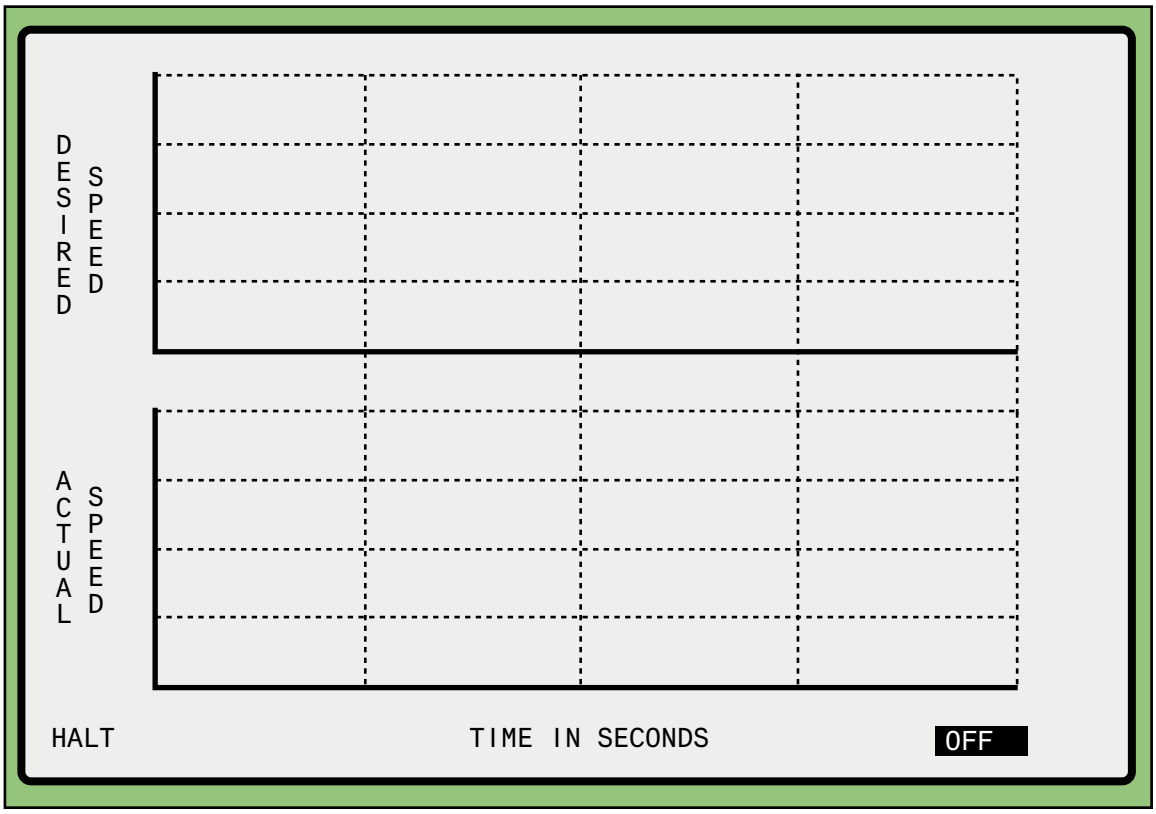

The Scope Screen displays acceleration and deceleration curves. The cursor is used to select the mode of operation. When the cursor is moved to the mode area on the bottom right of the screen, pressing the '0' key will turn off the curve display or bring up the acceleration or deceleration display. Two graphs are displayed. The top graph displays the desired speed versus time and the bottom graph displays the actual speed versus time. The screen will only be updated when the motion status on the bottom left corner of the screen displays "HALT."

- OFF - In this mode, no motion updates occur.
- Acceleration Display - In this mode, the speed curve generated in the first 5 seconds of motion after the car leaves a floor is displayed.
- Deceleration Display - In this mode, the speed curve generated in the last five seconds of motion before the car is halted at the floor is displayed.

Accessing Parameter Screens

When parameter screens are accessed, the car will be stopped from running. The car should be halted and removed from service prior to switching from diagnostic to parameter entry mode.

- With the car halted, press the S1 (reset) button on the MPU board.
- After the processor resets, the following message will be displayed for 10 seconds:
  MCE Technical Support (718) 417-3131 Microflite IntellaNet
  Press 1 Now to Alter Parameters
- Press 1 to display the car parameter menu.
- Move the cursor to the desired menu.
- Press the ‘0’ key to display the menu.

```
 1-MOTION PARAMETERS
 2-BRAKE AND HOISTWAY DEVICES PARAMETERS
 3-CAR OPERATING DEVICES PARAMETERS
 4-DOOR PARAMETERS
 5-FIRE, EMERGENCY POWER PARAMETERS
 6-VIP, MEDICAL, EARTHQUAKE PARAMETERS
 7-MISCELLANEOUS PARAMETERS
 8-SIMPLEX/INC RISER PARAMETERS
 9-FLOOR NAMES, PI OUTPUTS, CE VOICE UNIT
10-EVENT DISABLE PARAMETERS
11-CAR CALL LOCK ENTRY
12-HALL LOCK ENTRY (SIMPLEX/IR ONLY)
13-FLOOR LANDING VALUES
14-PRETORQUE, LEARN TRIP
15-TERMINAL SLOWDOWNS
16-MODEM PARAMETERS
17-PASSWORD/JOB CONFIG/TIME/CLEAR EVENTS
18-WRITE TO NON VOLATILE MEMORY AND EXIT

To save new parameters, press ENTER
while the cursor is blinking on No. 18.
```

Saving Parameter Values

- After modifying parameters, return to the main menu by moving the cursor until it is on the word “Return” at the bottom of the menu, then pressing the ‘0’ key.
- Move the cursor to Write to Non Volatile Memory and Exit.
- Press the ‘0’ key. A dialog box will appear asking if you are sure you want to save the values. Move the cursor to ‘Y’. Press the ‘0’ key. A message will confirm that values have been saved.

Motion Parameters

```
■ Speed (fpm) Relevel:    Max:    Min:
  Energy conserv switch: HIGH PERFORMANCE
  SPEED CURVES: HP-HIGH PERFORMANCE
   L-Long  S-Short Runs  EC-Energy Conserve
  Max floor distance for HPS (counts):00000
                                HPL  HPS   EC
  Init jerk rate (ft/s3):       _._  _._  _._
  Accel Rate (ft/s2):           _._  _._  _._
  Jerk rate (ft/s3):           __._ __._ __._
  Response time (1/100  sec):    __   __   __
  Final jerk rate (ft/s3):      _._  _._  _._
  Final jerk dist. (in):         __   __   __
  Advance (counts):              __   __   __
  Pre-open (counts):            ___  ___  ___
  Plateau length (in):                     __
  Add. plat. length (ft): __     Speed:  ____
  Dist. (counts) level:   __   Relevel:    __
  FFA/FFB speed (fpm) accel:____  decel:____
  Overspeed trip speed: (fpm)           ____
  SCR/REG restart time: (sec)             __
  Drive Type: MAGNETEK AC
  Pretorq/Analog Ins: NONE
```

- Speed (fpm) Relevel: Max: Min:
  Sets the releveling, contract, and leveling speed for the system.
  - Relevel: Set from 2 to 10 FPM (try 5).
  - Max: Set to the car contract speed.
  - Min: Set from 4 to 6 FPM (try 4). Higher settings may result in hard stops.

Caution

Setting the Maximum Speed parameter to something other than contract speed will not result in a lower car speed. Scaling of the car speed is accomplished through the drive or regulator. This value MUST be set to contract speed or the car will not operate properly.

- Energy conserv switch:
  The two performance levels, high performance or energy conservation, are implemented by switching between two distinct speed curves. These curves are generated based on two sets of user-entered parameters.
  - Dynamic: The car will automatically switch between performance (peak) and conservation (off peak) profiles by monitoring call volume.
  - High Performance: The car will run continuously in high performance mode.
  - Energy Conservation: The car will run continuously in energy conservation mode.

Figure 10.2 S Curve Parameters

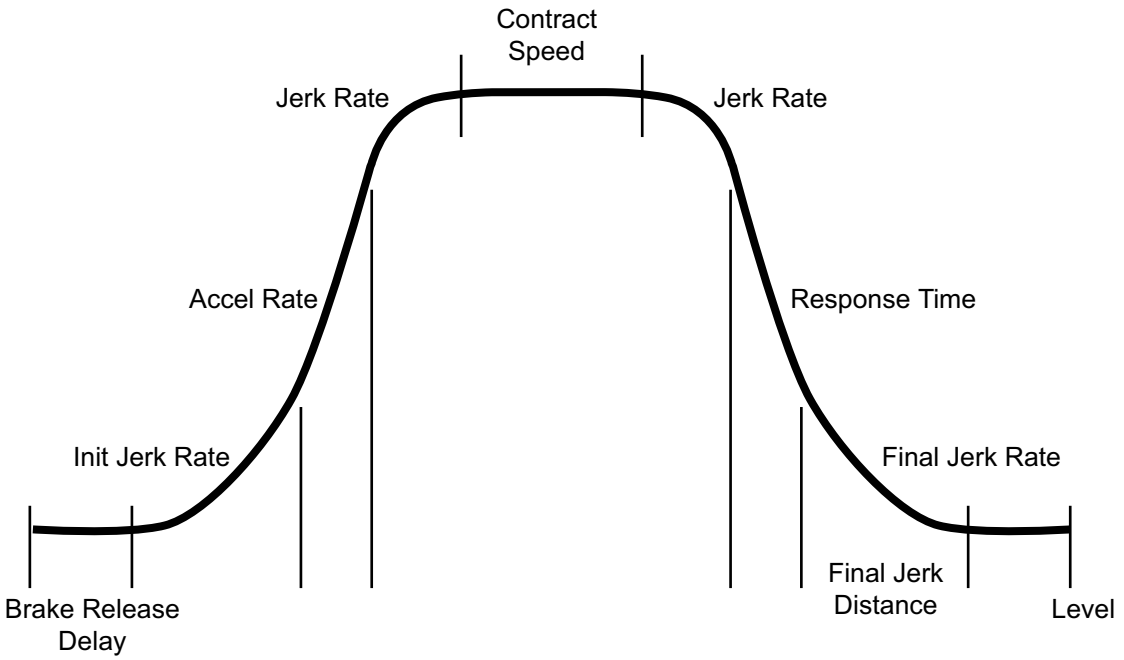

Speed Curves Settings on this screen allow you to adjust both high performance and energy conservation performance settings. The preceding illustration shows the associated point in the performance S-curve for some of the parameters. High performance parameters are used during peak traffic times for best possible floor times. Energy conservation parameters are used during off-peak traffic times to conserve energy when peak performance is not required.

There are two sets of values for high performance; one for long runs (HPL) and one for short runs (HPS). Short run values are used on one-floor runs. Long run values are used on multi-floor runs.

Energy Conservation settings will be used during off-peak hours and while the car is on emergency power (if the HP/EC switch parameter is set to “Dynamic”). All Energy Conservation values should be adjusted such that the car uses reduced acceleration, deceleration, and jerk rates.

- Max floor distance for HPS (counts):
  Sets the distance in counts (16 per inch) to switch from the short run values (HPS) to the long run values (HPL) in the High Performance mode of operation. For typical floor heights, a value of 2500 (approximately 13 feet) is recommended. Make the value larger if typical floor heights are greater than 13 feet.

- Init jerk rate (ft/s^3):
  Sets the jerk rate for the very beginning of car motion. Range is from 0.0 to 10.9. A lower number can be used to compensate for a sluggish brake or poor drive or regulator tracking. A higher number can be used to compensate for a sluggish hoist motor to minimize roll back. Reasonable values range from 0.5 to 8.0. Try an initial setting of 2.0.
- Accel Rate (ft/s^2):
  Sets acceleration rate. Reasonable values range from 1.5 to 3.5. Try an initial setting of 2.5. The normal deceleration rate will automatically be set to the same value as the highest acceleration set here.
- Jerk rate (ft/s^3):
  Sets the change of acceleration rate (Jerk) in high performance long run, high performance short run, and energy conservation modes. A number from 1.0 to 25.9 may be used. This value is in feet per second cubed. A value equal to the Accel Rate will take the car one second to make the transition from linear acceleration to high speed or plateau; from start to linear acceleration; and from linear deceleration to minimum speed. A value of twice the Accel Rate will take the car one half a second to make the transition while a value one half the Accel Rate will take two seconds. Reasonable values range from 1.0 to 8.0. Try an initial setting of 2.5.
- Response time (1/100 sec):
  Compensates for drive and hoist motor response. This value acts as a 'look ahead' time, telling the speed profile generation software the amount of time it takes the car to follow the speed demand. A setting of 0 assumes the car will precisely follow the speed profile with no delay. The more sluggish the system, the larger the number required to compensate for drive tracking.
  Higher values make the system initiate changes in the profile sooner since the car will not follow the demanded profile closely. Setting this value too large will lengthen the slow down and adversely impact floor-to-floor times. Reasonable values range from 15 to 50. Try an initial setting of 25 and monitor the scope screen to determine if adjustment is required.

Note

The Response time parameter is one of the most critical adjustments in the speed profile. If the parameter is set too high, the car shows prolonged deceleration. If it is set too low, a noticeable bump will be felt in the car after the jerk rate from continuous speed to deceleration is applied.

- Final jerk rate (ft/s^3):
  Controls the transition from deceleration to approach into the floor (determines how sharp the transition will be). A rate from 1.0 to 8.0 is reasonable. Try an initial setting of 4.0.
- Final jerk dist. (in):
  Sets the distance from floor level at which the transition from deceleration to approach into the floor will occur. Reasonable values range from 2 to 8. Try an initial setting of 4 inches.

Final Jerk Rate and Distance are also critical adjustments. If the final speed that is generated when coming off the final jerk parameter does not meet the Final Jerk Rate value, a bump will be felt in the ride when the car is approximately 3 to 6 inches away from the floor.

- Advance (counts):
  Sets the distance from the target floor (in encoder counts) at which speed is set to the minimum speed. This provides a constant leveling speed reference equal to minimum speed parameter. Reasonable values range from 0 to 20. A low value is recommended. Higher values will result in longer floor-to-floor times. Try an initial setting of 8.
- Pre-open (counts):
  Sets the number of counts (each count equals 1/16”) from the target floor at which the controller will begin pre-opening the door. The car must be in the door zone to actually open the door. The range is from 10 to 90. A value of 48 (3 inches) is recommended.
- Plateau length (in.):
  Sets the minimum distance (in inches) the car will travel at a constant speed before initiating slowdown into the target floor. This parameter is generally used only on jobs with MG sets because some MG sets have a relatively large time constant for field pieces and do not respond quickly to demands to switch from positive to negative current. Reasonable values range from 0 to 20. A value of 0 is recommended for SCR drives, 10 for MG jobs.
- Add. plat. length (ft):
  The additional distance (in feet) added to the above plateau length at higher speeds to provide more stability in weak field conditions. Typically only used on MG jobs. Initially set at 1 or 2 feet but if re-leveling is observed on higher speed runs, increasing this value will be beneficial. Reasonable values range from 2 to 10. A value of 0 is recommended for SCR and AC drives. A value of 2 is recommended for MGs.
- Add. plat. length Speed:
  Refers to the minimum speed required to change the plateau length to the above value. This speed is usually set 50 to 100 FPM below the speed the car reaches with full field voltage across the hoist motor field on a one floor run.

Note

To disable these parameters set Additional Plateau Length to zero and Additional Plateau Speed to contract speed (Maximum Speed).

- Dist. (counts) level:
  Sets the distance from the target floor that is considered level (dead zone) following a run. A value of 3 counts is recommended.

Danger

Setting this number too large will cause the car to stop further away from floor level and could result in a tripping hazard.

- Dist. (counts) Relevel:
  Sets the number of counts away from the floor required to initiate a re-level. At 16 counts per inch, a value of 8 will result in a 1/2” re-level zone. A value of 7 is recommended.

Danger

Setting this number too large will cause the car not to re-level into the floor and could result in a tripping hazard.

- FFA/FFB speed (fpm) accel: / decel:
  These parameters control the motor field weakening output. They are used only on MG jobs. The values entered for accel and decel will control the speeds at which the field weakening signal is turned off after the car begins a run, and turned on when the car begins to decelerate. For SCR or AC applications, set to contract speed.
- Overspeed trip speed: (fpm)
  Actual car speed that will cause an internal shutdown due to an overspeed condition. Set this to a value about 10% greater than contract speed. If the actual speed is greater than the value set in this parameter, the microprocessor will cause the car to slow down at the next available floor. A value of 9999 will disable the feature.
- SCR / REG restart time: (sec)
  The time, in seconds, that the controller will wait to reset the regulator after a regulator trip. We recommend this value not be set lower than 10 seconds.
- Drive Type:
  Set to the type of drive used in this controller. This entry is preset at the factory. The drive model is shown on the prints for the specific job. If the drive is a KEB/F5, drive parameter LF.80 shows the operator software revision:
  - Geared AC motor, KEB operator revision 1.61 or lower: KEB SER49 GD
  - Gearless AC motor, KEB operator revision 1.61 or lower: KEB SER49 GL
  - Geared AC motor, KEB operator revision 1.71 or higher: KEB SER50 GD
  - Gearless AC motor, KEB operator revision 1.71 or higher: KEB SER50GL

  Important: After changing drive type, cycle controller power off, then on. This resets the relay board and forces it to read the changed parameter.
- Pretorq/Analog In(put)s:
  Determines what will cause pretorque to be enabled.
  BOTH: Motor is pulsed before start of run to prevent rollback when brake is released. Strain gauge output level used to generate appropriate pulse strength. If there is no strain gauge or if pretorque setup is not correct, car may have excessive rollback at start of run. Strain gauge and analog input may also be used for weight related car dispatching, call bypass, and overload conditions.
  INPUTS ONLY: No motor pretorque at start of run. Strain gauge and analog input may still be used for weight related car dispatching, call bypass, and overload conditions.
  NONE: No motor pretorque at start of run. Analog load weigher input ignored.

Note

Pretorq/Analog Ins BOTH and INPUTS ONLY selections require strain gauge connected to analog input. Otherwise, parameter must be set to NONE.

Torqmax/Kebco F5 drive. We strongly suggest you use drive pretorque and INPUTS ONLY for best control results.

Return to the main menu by pressing the ‘0’ key when the cursor is on RETURN. You can leave the parameter entry screen without saving your data at any time and return to the main menu by pressing the reset button (S1 button on MPU card). Values entered are not permanently stored in memory until the “Write to Non Volatile Memory and Exit” option is selected.

Brake and Hoistway Devices Parameters

```
Brake set failure immediate shutdown:  Y N
Brake switch:NOT PRESENT
Pattern start del (.1s):00 on relevel:00
Brake times (0.1 sec): Release failure  __
Rel delay __  Drop delay __   Pick/Hold __
Car run through brake time (sec)        __
OSPD contact norm closed               Y N
Ring down hall lantern and gong once?  Y N
DNG/DDG/DNGR/DDGR double chime times
(0.5 sec): first on __  between chimes  __
Ring hall lanterns for car calls?      Y N
UPG/DNG on for last term. car calls?   Y N
Hall lantern timeout (99 = no timeout)  __
Advanced PIs and hall lanterns?        Y N
Min time on for advanced PI (msec)     ___
LRN return floor:                       __
Cancel car calls before LRN shutdown?  Y N
LMGS return floor / door:           __ F R
Cancel car calls before LMGS shutdown? Y N
LMGS cycles door upon lobby arrival?   Y N
LMGS door open button enabled?         Y N
LMGS overrides IND and ATT?            Y N
```

- Brake set failure immediate shutdown: Determines whether or not the failure of the brake to set will cause an immediate shutdown.
  - If set to Y (yes), failure of the brake to set after the “release brake” output (RBK) has been off for 1.5 seconds will cause the car to shut down immediately. (Brake set failure shutdown)
  - If set to N (no [default]), the car is allowed up to five consecutive runs with the brake failing to set before it is shut down. (Brake set failure shutdown)
- Brake switch:
  - Not Present: BKR input status ignored.
  - Normally Open: BKR input high when brake is lifted.
  - Normally Closed: BKR input goes low (turns off) when brake is lifted.

  Important: After changing Brake switch, cycle controller power off, then on. This resets the relay board and forces it to read the changed parameter.
- Pattern start del (0.1 sec):
  - Pattern start del: Delay in 1/10 second increments between the command to release the brake and speed pattern application. Used to compensate for a slow-picking brake. Otherwise, set to 0. Range is 0 to 20 tenths of seconds (default 0).
  - On relevel: Same as Pattern start delay, except used only on releveling.

Note

On load-weigher input pre-torque jobs, Pattern start delays are factory set to zero. On synthetic pre-torque jobs (KEB drive, no load weigher), Pattern start delays are factory set to 0.6 seconds to allow KEB US.18 timer to expire before the pattern starts. These settings may require further adjustment in the field.

- Brake times (0.1 sec):
  - Release failure: The time, in 1/10 second increments, to allow the brake released input to report that the brake has lifted. If the brake released input is delayed beyond this time, the car will shut down on a brake release failure. Range is 0.5 to 9.0 seconds (default 5 seconds). Release failure should never be set to less than 10 (1 second).
  - Rel delay: Delay in 1/10 second increments between speed pattern application and the command to pick the brake. Used to help prevent sag when motor response is sluggish. Otherwise, set to 0.

Note

On pre-torque jobs, Rel delay must be set to zero.

  - Drop delay: Delay in 1/10 second increments between the car coming to a complete, controlled stop under the motor before dropping the brake. Prevents a rapidly dropping brake from stopping the motor before the speed command is dropped.
  - Pick/Hold: Delay in 1/10 second increments before brake voltage is reduced from pick to hold level. (Pick voltage is applied to lift the brake completely. Hold voltage allows the brake to relax slightly although the shoes remain above the braking surface (sometimes called “cooling” voltage). Minimum: 1. Maximum: 99. Default 35.

  Important: After changing Pick/Hold, cycle controller power off, then on. This resets the relay board and forces it to read the changed parameter.

- Car run through brake time (sec):
  The amount of time (in seconds) the car will run before faulting if BKR input does not change state. Only active if pretorque is disabled. If the “Motor Pretorque” parameter is set to “Yes” the car will not move from the floor and the “Brake Release” fault will occur.
- OSPD contact norm closed:
  This parameter sets the normal (non-tripped) position of the overspeed switch on the governor. Y = normally closed. N = normally open. If no over speed switch is installed, set to “No.”
- Ring down hall lantern and gong once?
  Set to “Yes” for single gong. The hall lantern and car lantern will turn on and stay on until the door closes.
  Set to “No” for two-gong operation. The lanterns will ring once, turn off, and then turn on and stay on.

Note

If the chimes automatically deliver a double-gong, set Ring down hall lantern and gong once to Yes. If set to No, the repeated command may cause three gongs.

- DNG/DDG/DNGR/DDGR double chime times (0.5 sec):
  - First on: Amount of time (in 0.5 second increments) that the first gong output will remain active/on.
  - Between chimes: Amount of time between the first and second strokes of the chimes (in 0.5 second increments).

- Ring hall lanterns for car calls?
  Set to “Yes” to enable hall lanterns to ring when arriving at a landing in response to a car operating panel-entered call.
- UPG/DNG on for last term. car calls?
  Set to “Yes” to ring the hall and/or car traveling lantern for terminal floor car calls.
- Hall lantern timeout (99 = no timeout):
  Amount of time hall lantern will stay illuminated before turning off. Typically only used on freight door applications to prevent the hall lantern bulbs from burning out if the doors remain open for a prolonged time.
- Advanced PIs and hall lanterns?
  If set to “Yes” the position indicators and hall lanterns will be activated in advance of the car decelerating into the floor. We recommend this feature be enabled as it provides additional arrival notification.
- Min time on for advanced PI (msec):
  On higher speed cars, the position indicator outputs from the MPU may change too quickly to allow some electronic position indicator fixtures to respond consistently to the change in position. If erratic position indicator displays are seen during acceleration, this parameter adjusts the minimum length of time each position indicator output will remain on while advancing the car position. Measured in milliseconds (500 = 500 milliseconds or 0.5 seconds).
- LRN (lobby return) floor:
  Sets the floor the car will return to when the Lobby Return input (LRN) is turned on.
- Cancel car calls before LRN shutdown?
  If set to Yes, all car calls will be cancelled when the LRN (Lobby Return) input is activated.
  If set to “NO”, the car will answer all existing car calls (but will accept no new car calls) before returning to the lobby.
- LMGS return floor / door:
  Sets the floor number to which the lobby motor/generator shutdown switch (LMGS input) returns the car and determines whether the front or rear doors will open.

Note

The floor number, 1 = the lowest floor, must be used (not the floor name).

- Cancel car calls before LMGS shutdown?
  If set to “Yes” all car calls will be cancelled and the car will immediately proceed to the lobby (designated floor) when the LMGS (Lobby Motor Generator Shutdown) input is activated.
  If set to “No”, the car will answer all existing car calls (but accept no new car calls) before returning to the lobby.
- LMGS cycles door upon lobby arrival?
  If set to “Yes” the doors will open for a moment then close when the car arrives at the lobby in response to the LMGS (Lobby Motor Generator Shutdown) input.
  If set to “No” the doors will not open when the car arrives at the lobby.
- LMGS door open button enabled?
  If set to “Yes” the door open button will be functional when the car is in the lobby and the doors are closed after the LMGS (Lobby Motor Generator Shutdown) input is activated.

If set to “No” the door open button will not function when the car is in the lobby and the doors are closed after the LMGS input is activated.

- LMGS overrides IND and ATT?
- Set to Yes if the lobby motor/generator shutdown recall should override independent and attendant operation. Set to No if it should not.

To return to the main menu, press the ‘0’ key when the cursor is on “RETURN TO MAIN MENU.” Return to the main menu at any time without saving data by pressing the reset button (S1 button on MPU card). Changed values are not permanently stored until “Write to Non Volatile Memory and Exit” is selected.

Car Operating Devices Parameters

```
Operating Devices Parameters
Binary PI start at 0 or 1?                    Y N
Ring down car lantern and gong once?          Y N
Car lantern timeout (99 = no timeout)          __
Floor pass chime (FPC) 1 down?                Y N
Disabled code - (FPC) latched?                Y N
BZI norm closed? Y N  Buz replaces FPC?       Y N
Time between ATT buzzer rings (sec)            __
Car calls latch behind car?                   Y N
Piezo-electrical car buttons?                 Y N
Bypass car call lock IND? Y N ATT? Y N DOB Y N
Card reader call confirm operational?         Y N
LKO/HLOF N/O? Y N Lockout inputs N/O?         Y N
IND ignores alt/norm car call config?         Y N
EE Antinuisance Enabled?                      Y N
Num stops before cc cancel/sequence            __
Num seq. before antinuisance disable           __
Maximum car calls per 10% loading              __
Auto calibration enabled?                     Y N
% Full load weight disp: ___     byp:   ___
Ol:___ (101 - Disable or no strain gage)
HDD fl1: __  fl2 __   fl3: __  (0 = none)
```

- Binary PI start at 0 or 1?
  A zero (0) will set all binary position indicator outputs off for the first floor.
  A one (1) will set binary position indicator output one (1) on, and all other position outputs off for the first floor. This is only useful if binary position indicators have been provided. Binary PI start at 0 or 1 must be set to 1 if the CE electronics display type requires the “slot ID” format. For example: half-moon, scrolling, or dot matrix.
- Ring down car lantern and gong once?
  Set to Yes for single gong operation.
  Set to No for two-gong operation.
- Car lantern timeout (99 = no timeout):
  How long shall the car lantern remain on before timing out? (Typically used with freight doors that may remain open for a long period of time to protect the lamp from burning out.)

- Floor pass chime (FPC) 1 down?
  Yes for single gong operation.
  No for two-gong operation.
- Disabled code - (FPC) latched?
  If set to Yes, the Floor Passing Chime will work for all types of runs for automatic and Attendant Services. If set to NO, the BZI input must be a normally closed input. Momentarily turning BZI OFF, through a signal button on the car station, will cause FPC (the floor passing chime) to operate until a reversal of direction occurs (single trip).
- BZI norm closed?
  Default is Yes. Sets the polarity of the “S” (Audible Signal) button. When set to Yes, the floor-passing chime will operate when the button is pressed and released. FPC output will be enabled until car changes direction.
- Buz replaces FPC?
  If set to Yes, the buzzer output is turned on simultaneously with the floor passing chime output.
- Time between ATT buzzer rings (sec):
  Allows adjustment of ATT buzzer off-time. (The ATT buzzer on-time is one second.)
- Car calls latch behind car?
  If set to NO, the car calls will not latch behind the current car position.
- Piezo-electrical car buttons?
  Used to facilitate non-constant pressure activation of piezo-electric car buttons. Setting this parameter to Yes will allow car calls to latch and the Door Close button to close the door on Independent Service.
- Bypass car call lock IND?
  If set to Yes, car call locks will be bypassed when the car is on Independent service.
- Bypass car call lock ATT?
  If set to Yes, car call locks will be bypassed when the car is on Attendant service.
- Bypass car call lock DOB?
  If set to Yes, pushing the door open button will reopen a fully locked door on a floor whose car call is locked out via a car-mapped hardware lock only.
  If set to No, the door open button will not reopen a fully locked door on such a floor.
- Card reader call confirm operational?
  Operational only when the directory light outputs are present.
  If set to Yes, during the car call latch period, the corresponding directory light will turn on only one time for one second when a car call button is pressed.
  If set to No, the directory light will stay on as long as a car call is latched.
- LKO/HLOF N/O?
  This parameter reverses the polarity of the LKO input (and the HLOF input for a simplex car). Default is Yes.
- Lock out inputs N/O?
  Set to Yes if lock out inputs are normally open or are unused. Set to No if lock out inputs are normally closed.
- IND ignores Alt/Norm car call config?
  If set to Yes, the car will ignore normal and alternate car call configurations when on Independent service. If set to No, the car will be subject to normal and alternate car call stipulations when on Independent service.

- EE Anti nuisance Enabled?
  If set to Yes, all registered car calls will be cancelled if the car makes x consecutive car call stops (as set in the following parameters), without the photo eye being interrupted. After canceling the car calls, the electric eye beam must be interrupted to re-enable this feature. Hall stops do not increment the anti-nuisance counter. If set to No, this feature is disabled.
- Num stops before cc cancel/sequence:
  Sets the number of car call stops to be exceeded, without the photo eye being interrupted, to trigger the EE Anti nuisance feature.
- Num Seq before Anti nuisance disable:
  Prevents a disabled photo eye from invoking EE Anti nuisance if photo eye input is not detected for this number of sequences. (Sequence defined as a door cycle followed by a car call entry.) Once disabled, anti-nuisance can only be re-enabled by resetting the MPU.
- Max car calls per 10% loading:
  Indicates how many car calls to allow based on amount of weight in the car. If the number of calls exceeds this value based on the load, all calls will cancel. Typically set to allow 1 call per 100 pounds of load. For example, if the car capacity is 3000 pounds, set this value to 3 to allow 3 calls with 300 pounds (10%) of load. (No effect if Pretorq/Analog Ins is set to "NONE.")
- Auto calibration enabled?
  If Yes, an empty car is periodically automatically brought to the bottom terminal landing and the strain gauge re-calibrated by activating the auto-calibration input sensor (where present).
  If No, an empty car remains parked after answering its last assignment (no return to bottom terminal landing to re-calibrate).

Note

The settings above depend on the type of strain gauge being used (presence of an auto-calibration input). i.e., typically set to Yes when using newer K-Tech models but not when using EMCO load weighers.

- **% Full load weight disp:**
  Used on jobs where the "Pretorq/Analog Ins" parameter is set to either "BOTH" or "INPUTS ONLY." Indicates percentage of full load before the car begins to close its doors in preparation to depart the lobby floor. Set to 101 if "Pretorq/Analog Ins" is set to "NONE."
- **% Full load weight byp:**
  Used on jobs where the "Pretorq/Analog Ins" parameter is set to either "BOTH" or "INPUTS ONLY." Indicates percentage of full load at which the car should bypass hall calls (as measured by the strain gauge on the crosshead). Set to 101 if "Pretorq/Analog Ins" is set to "NONE."
- **% Full load weight Ol:**
  Used on jobs where the "Pretorq/Analog Ins" parameter is set to either "BOTH" or "INPUTS ONLY." Indicates the percentage of full load, as measured by the strain gauge, at which the car will shut down due to overload condition. Set to 101 if "Pretorq/Analog Ins" is set to "NONE."
- HDD fl1, fl2, fl3 (0 = none):
  Allows you to set up to three floors for heavy duty door operation. (Command increased torque from the operator to compensate for heavy doors or wind loading.) The heavy duty

door output (HDD/HDDF/HDDR) will be turned on when doors start closing at heavy duty door floor.

Return to the main menu by pressing the '0' key when the cursor is on RETURN. You can leave the parameter entry screen without saving your data at any time and return to the main menu by pressing the reset button (S1 button on MPU card). Values entered are not permanently stored in memory until the "Write to Non Volatile Memory and Exit" option is selected.

Door Parameters

```
Door Parameters
Door Times (0.1 sec):
Car call:        ___    Hall call:        ___
Nudging:         ___    Freight:          ___
Reopen:          ___    Recycle:          ___
Group:   Lobby:  ___    Lobby after call: ___
Disable power door operation on insp?     Y N
SE/EE/DOB changes door time to reopen
time for car calls? Y N  for hall calls?  Y N
Close button functional in lobby?         Y N
Door recycle on direction change?         Y N
Doors open simultaneously auto?           Y N
Door close motor protection?              Y N
DCL/DOL closed at limits?                 Y N
ANSI-1996 DCL required at startup?        Y N
Nudging: SE reopen? Y N   EE bypass?      Y N
Normally open inputs -EE:Y N SE: Y N DOB: Y N
Electric eye enabled on Att/Ind?          Y N
Peelle door auto open/close?              Y N
Auto Peelle door open timeout (sec):       __
DOB ignores alt/norm car call config?     Y N
DOB ignores car call locks?               Y N
```

- Door Times (0.1 sec):
  - Car call: Door open dwell time when answering a car call only. If the electric eye is interrupted, door time is reduced to Reopen time.
  - Hall call: Door open dwell time when answering a hall call. If the electric eye is interrupted or the safety edge or door open button triggered, door time is the remaining door open time or the Reopen time, whichever is greater.
  - Nudging: Door open dwell time that will trigger door nudging. Time starts when doors start to open.
  - Freight: Door open dwell time after the Freight Door Time input is activated and times out. This feature will only work if the FDT input is present or if FDTF or FDTR (front and rear) are present.
  - Reopen: The time the doors will remain open after SE, EE, or DOB operate.

- Recycle: The time within which the lock and gate contacts must make. If they do not make within this time, the doors will reopen. Time starts when close cycle is initiated.
- Lobby: This time applies to a car at the lobby floor that is NOT designated as this car up (TCU).
- Lobby after call: This time applies to a car, at the lobby floor, that is NOT designated this car up (TCU). It is the time the door will stay open, in the lobby, after a car call is entered or a hall call assignment is registered.

- Disable power door operation on Insp?
  If set to Yes, the door operator will not open the doors while the car is on Inspection.
  If set to No, the door operator will open the doors while the car is on Inspection.
- SE/EE/DOB changes door time to reopen time for car calls?
  If set to Yes, door time will be reduced to Reopen time when SE, EE or DOB inputs are activated.
- Close button functional in lobby?
  If set to Yes, the door close button functions while the car is in the lobby.
  If set to No, the door close button does not function while the car is in the lobby.
- Door recycle on direction change?
  Refers to hall calls on a floor at which the car is standing (in the opposite direction of the cars preferred direction of travel).
  If set to Yes, there will be a full door cycle before the car will change direction.
  If set to No, travel direction indication will change after door dwell time expires.
- Doors open simultaneously auto?
  Applies to cars with two door openings on Automatic Service only.
  If set to Yes, doors will open simultaneously and, if both calls are present, both calls will be unlatched. If this car belongs to a group, this parameter must be set to the same value on the dispatcher as well.
  Set to “No” on single or non-selective door cars.
- Door close motor protection?
  If set to Yes, door recycling will be automatically interrupted in case of door close / door gate failure. (Typically set to Yes to protect the motor from potential burn out.)
  If set to No, the door will recycle until DCL and / or DG make.
- DCL / DOL closed at limits?
  If set to Yes, the Door Closed Limit (DCL) input is energized when doors are fully closed and Door Open Limit (DOL) is energized when doors are fully open.
  If set to No, the DCL input is de-energized when the doors are fully closed and DOL is de-energized when doors are fully open.
  (This parameter is used in the event of reverse door limit logic to prevent the user from needing to install additional relays on the car to reverse the limit logic.)

Note

Even if DCL / DOL closed at limits is set to No, the associated input on the display screen will be highlighted when the doors are full open or full closed, regardless of the state of the input.

- ANSI-1996 DCL required at startup?
  If set to “Yes” the car will not be allowed to move if the DCL input indicates that the doors are not fully closed. Required for ANSI/ASME A17.1 1996 Code.

- Nudging:
  - SE Reopen? If SE is set to “No” the door will stall in the position it has at the time of activating Safety Edge rather than fully reopening. Set to “No” for infrared edges. (SE not wired with infrared door edges.)
  - EE Bypass? If parameter set to Yes, the door will close after the nudging time has expired even if EE is still active. If set to “No” the door will continue to stay open on nudging.
- Normally Open Inputs:
  - EE: If set to Yes, the electric eye contact feeding the input (EE) is normally open. If set to NO, the electric eye contact feeding the input (EE) is normally closed. On the status display screen, EE will be highlighted when triggered.
  - SE: If set to Yes, the safe edge contact feeding the input (SE) is normally open. If set to NO, the safe edge contact feeding the input (SE) is normally closed. On the status display screen, SE will be highlighted when triggered.
  - DOB: If set to Yes, the Door Open Button contact feeding the input DOB is normally open. If set to No, the contact is normally closed. On the status display screen, DOB will be highlighted when triggered.
- Electric Eye Enabled on ATT/IND?
  If set to Yes, the doors will be re-opened while closing if the EE input is activated while the car is on Independent or Attendant service.
- Peelle door auto open/close?
  If set to Yes, and the car has freight doors, the doors will open and close automatically. If set to No, the doors will not open and close automatically.
- Auto Peelle door open timeout (sec):
  Sets the time, in seconds, before an opening time out will occur on a freight door.
- DOB ignores alt/norm car call config?
  If set to Yes, the Door Open Button will be functional (with the car stopped in the door zone) regardless of the car call configuration currently selected.
  If set to No, the Door Open Button will only be functional (with the car stopped in the door zone) if the car is at a floor accessible when operating under the current car call configuration.
- DOB ignores car call locks?
  If set to Yes, the Door Open Button will be functional (with the car stopped in the door zone) even if car calls are locked for that floor.
  If set to No, the Door Open Button will be functional (with the car stopped in the door zone) only if car calls are not locked for that floor.

Return to the main menu by pressing the ‘0’ key when the cursor is on RETURN. You can leave the parameter entry screen without saving your data at any time and return to the main menu by pressing the reset button (S1 button on MPU card). Values entered are not permanently stored in memory until the “Write to Non Volatile Memory and Exit” option is selected.

Fire and Emergency Power Parameters

```
Fire and Emergency Power Parameters
Fire Code: CHICAGO PRIOR TO 2001, USA BEFORE
A17.1-2005, WHITE PLAINS, CALIFORNIA, CANADA,
NYC W/O APPENDIX K, AUSTRALIA, NEW ZEALAND,
A17.1A-2005 OR LATER, NYC WITH APPENDIX K
NYC/White Plains Gate/Door contact faults
detected AT ALL TIMES, AT NO TIMES,
EXCEPT ON FIRE SERVICE, EXCEPT ON FIRE PHASE 2.
Fire cls nudg Ph1? Y N  Ph2 - Ph1 Reversal? Y N
Fire overrides:  MGS? Y N  LMGS? Y N  LRN?  Y N
Fire recall floors and doors:    Main: __   F R
Detect A:__ F R Detect B:__ F R Detect C:__ F R
Enter Y if hooked up to a MR or hoistway sensor:
Detect B: Y N  Detect C: Y N
FRLC flashes per A17.1-2004 or later?       Y N
FBY operation: (NOT SHOWN FOR ANSI 2000 CAR)
FBY disabled (AREC - CREC not latched)
FBY enabled (AREC - CREC latched)
AREC/BREC/CREC inputs normally open?        Y N
Fire ph2: Reopening door will wait for
DOL before DCB causes closing?              Y N
Keep door open after emg. pwr. ph1?         Y N
Return IND/ATT cars on emg. pwr. ph1?       Y N
Speed reduce factor 99% max spd
EMG switch normally open?                   Y N
Em Pwr total # of banks: __     this bank #: __
```

- Fire Code: Selects the proper fire code operation. Pressing the ‘0’ key toggles between the available options. Default is USA BEFORE A17.1-2005.
- NYC/White Plains Gate/Door contact faults detected:
  Controls whether the system will check for a fault or jumper in the door lock and gate circuitry.
  - At All Times: If the Door Open Limit (DOL) indicates that the car door is fully open but the gate switch and/or the door locks are closed the car will remain at the floor with the doors open.
  - At No Times: This proving is disabled.
  - Except On Fire Service: Proving is disabled when on Fire Phase 1 or Phase 2.
  - Except On Fire Phase 2: Proving is disabled when the car is on Fire Phase 2.

Note

Checking for a fault or jumper in the door locks and gate circuitry can be disabled via the parameters above only when using NYC (with or without Appendix K) or White Plains fire code. For all other codes, the Gate Contact and Door Contact faults will be detected at all times.

- Fire cls nudg Ph1?
  If set to Yes, the doors will close at reduced torque (CXXP output) on Phase I Fire Service only.
  If set to No, the doors will close at normal speed (CXP output) under Fire Service Phase I.

Note

If no mechanical SE is used (only the EE input) this parameter must be set to “Yes” to meet Fire Code.

- Fire cls nudg Ph2 - Ph1 Reversal? (default No)
  - If set to Yes, the nudging motor and buzzer turn on when the car reverts from fire phase 2 to fire phase 1.
    If set to No, the nudging motor and buzzer do not turn on when the car reverts from fire phase 2 to fire phase 1.
  - This parameter is active for fire code settings: USA BEFORE A17.1-2005, WHITE PLAINS, CALIFORNIA, CANADA, NEW ZEALAND, A17.1A-2005 OR LATER.
- Fire Overrides:
  - MSG: If set to Yes, Fire Phase I and Phase II will override the input.
    If set to No, the input will override Fire Phase I and II only if it was triggered before Fire Recall.
  - LMGS? If set to Yes, Fire Phase I and Phase II will override the input.
    If set to No, the input will override Fire Phase I and II only if it was triggered before Fire Recall.
  - LRN? If set to Yes, Fire Phase I and Phase II will override the input.
    If set to No, the input will override Fire Phase I and II only if it was triggered before Fire Recall.
- Fire Recall Floors and Doors:
  - MAIN: Sets the recall floor when the REC input (Lobby Phase I key switch) is activated.
  - Detector A, B, and C inputs select the floor and door when the AREC, BREC, and CREC inputs are activated respectively.
- Enter Y if hooked up to a MR or hoistway sensor: Detect B: Detect C:
  - If set to Yes: In combination with other user parameters and inputs, setting one of these parameters to Yes, indicating that a machine room or hoistway smoke detector is hooked up to detector B or C, will cause the car station fire light to flash per the requirements of A17.1-2004 or later code.
  - If set to No: Initiating fire operation via BREC (detector B) or CREC (detector C) input will be considered an initiation from a smoke detector other than the machine room or the hoistway sensor, therefore the car station fire light will not flash.

- FRLC flashes per A17.1-2004 or later?
  - If set to Yes: In combination with other parameters and inputs, setting this parameter to Yes will cause the car station fire light to flash per the requirements of A17.1-2004 or later code.
  - If set to No: In combination with the inputs, the car station fire light will operate per codes prior to A17.1-2004.

Note

Regarding the FRLC FLASHES PER A17.1-2004 OR LATER setting:
A. FRLF (fire light flash) input should be jumpered high permanently on jobs outside New York City (which must comply with the A17.1-2004 code or later).
B. For proper operation of the fire light flashing, it is necessary to wire the fire inputs to/for each of the cars.
C. If fire code is set to A17.1A-2005 OR LATER, this parameter is automatically active, regardless of its setting.

- FBY Operation: (Simplex or group cars with fire phase I inputs on car. Displayed only if no RECA input is present.)
  - FBY Disabled (AREC - CREC Not Latched): The car ignores the FBY (Fire Bypass Input). Neither the fire recall key switch, not the smoke detectors (AREC, BREC, and CREC) latch internally. The car returns to normal service when all fire inputs are off.
  - FBY Enabled (AREC - CREC Latched): When on, the FBY input bypasses the smoke detectors, allowing the car to run on normal service as long as the fire key switch is off, irrespective of the status of the smoke detectors. When the FBY input is off and the smoke detectors are triggered, the system latches the Fire Phase I recall. Turning off the smoke detector inputs will not allow the system to go back to normal service until the FBY input is turned on as well.
  - FRST - Fire Recall Reset (ANSI 2000 only): This parameter will not be displayed on the screen when the RECA input is present. The fire recall reset and the ANSI 2000 fire operation will be triggered automatically.
- AREC/BREC/CREC Inputs Normally Open?
  Set to Yes if smoke detector inputs are normally open.
  Set to No if smoke detector inputs are normally closed.
- Fire Ph2: Reopening door will wait for DOL before DCB causes closing?
  - If set to Yes (default), the fireman's constant pressure on the door close button will cause the doors to close. If the button is released before the doors are fully closed, the doors will fully open before closing can be re-established.
  - If set to No, when pressure is released during the close cycle and then re-established, the doors will immediately stop and re-close in mid-travel without completing the close cycle.

Note

The above parameter applies when fire code is set to "USA Before A17.1-2005", "White Plains", "California", "Canada", "Australia", "New Zealand", or "A17.1A-2005 or Later".

- Keep door open after emg. pwr. Ph1?
  If set to Yes, the cars that have completed the phase 1 return will remain with their doors open after they are shut down. Must be set to “Yes” to comply with the code for Canadian jobs.
  The default value is No.
- Return IND/ATT cars on emg. pwr. PH1?
  If attendant or independent operated cars are leveled with a floor and parameter is set to “No” they are not going to be returned to the emergency power recall floor on emergency power recall. This parameter should be set to match the same parameter on the dispatcher parameter screen.
- Speed Reduce Factor 99% Max Speed
  Set this to the percentage of maximum speed that you want the car to run when a High Wind input (RSP) is activated. The cars will also run at this speed during emergency power.

Note

The speed will only reset back to full speed if the transition back to normal power occurs where the NPWR input is high prior to the transfer.

- EMG Switch Normally Open?
  If set to Yes, the car will be Emergency Power when the EMG input is turned on. If set to No, the car will be on Emergency Power when the EMG input is turned off.
- EM Power Total # of Banks:
  This parameter is used only on simplex cars when the car is set up for multi-bank / split feeder Emergency Power operation. This parameter should be set to the total number of banks that will share the Emergency Power busses. This parameter affects bus selection timing. It is identical to the dispatcher Emergency Power split feeder parameter of the same name.
- This Bank #:
  This parameter is used only on simplex cars when the car is set up for multi-bank / split feeder emergency power operation. It is used to identify which number bank this car is in the building. Each dispatcher or simplex car that is tied to the same Emergency Power generator(s) in the building must have a unique number. This parameter affects the bus selection timing and, because of this, the parameter will also control the order banks put cars on automatic Phase 2 service.

VIP, Medical, Earthquake Parameters

```
VIP Service Enabled:                          Y N
Allow New Car Calls before VIP Phase 1:       Y N
Multiple Car Calls During VIP Phase 2:        Y N
VIP/Car Riser Med Phase 1 Dr Time (sec):      ___
VIP/Medical Phase 2 Door Time (0.1 sec):      ___
Return IND:Y N  ATT:Y N  Car on Med Phase 1?
Bypass In Car Stop Switch on Med Rec PH1? Y N
Med 1 Overrides Fire 1 if Triggered 1st?  Y N
Medical Phase 2: Momentary CME Input?     Y N
Opens Both Doors:Y N  Opens Door via DOB? Y N
Group Car Automatic Med Emergency Ph 2?   Y N
Med Ph 2 Overrides Fire Ph 1: NEVER
Med Ph 2 Immediate Door Close w/Call?     Y N
Turn Car Off Med Ph 2 at Rec Floor Only?  Y N
Bypass Car Call Locks on Medical Ph 2?    Y N
Med buzz on during: PH1 RECALLING ONLY
Flash Med Emergency Light (MEL/MELC)?     Y N
Turn on med ph2 only if med ph1 is on?    Y N
Seismic Run Allowed with Momentary CWL?   Y N
Fire Phase 1 Key-Switch overrides CWL?    Y N
Reduce Speed on CWSW/SASW Activation?     Y N
Counter Weight Zone:                       ____
```

- VIP Service Enabled?
  If set to Yes, the car will treat medical calls from the dispatcher as VIP calls. Upon assignment of a VIP call, the car will be removed from group service, complete answering any car calls, and then proceed to the VIP call floor. It will remain at the floor until a car call is entered or the “MED EMG / VIP” door time expires.
  If set to No, the car will treat medical call assignments from the dispatcher as a medical call.
- Allow New Car Calls before VIP Phase 1:
  When a VIP hall call is entered, the car is removed from group operation and will answer all of its car calls before going to the VIP hall call floor.
  If set to Yes, new car calls can be entered while the car is responding to existing car calls.
  If set to No, no new car calls can be entered while the car is responding to existing car calls.
- Multiple Car Calls During VIP Phase 2?
  If set to Yes, will allow multiple car calls during VIP Phase 2 service. The car will not return to normal service until all car calls have been answered and the VIP/Medical Phase II door time has expired.
  If set to No, will allow single car call after VIP Phase 1 has completed. The car will return to normal service once when the car call has been answered.

- VIP/Car Riser Med Phase 1 Dr Time (sec):
  When the parameter “VIP service enabled” is set to “No” and the car is answering a medical call that is mapped to the car controller, this parameter will control the amount of time the car will wait at the medical emergency floor before returning to normal service.
- If the car is answering a medical call that is mapped to a dispatcher, this parameter will have no effect. When the parameter “VIP service enabled” is set to “Yes” this parameter will control the amount of time the car will wait at the VIP recall floor before returning to normal service.

  This parameter is effective for both dispatcher mapped and car mapped VIP calls.
- VIP/Medical Phase 2 Door Time (0.1 sec):
  When the parameter “VIP SERVICE ENABLED” is set to NO, this parameter will control the door time during medical phase 2.When the parameters “VIP SERVICE ENABLED” and “MULTIPLE CAR CALLS DURING VIP PHASE 2” are set to Yes, this parameter will control the door time during VIP phase 2.
  With software versions 5.18 or later, when this parameter is set to 999, the door will not close automatically but will instead require activating the door close button.
- Return IND: Y/N ATT: Y/N car on Med Phase 1?
  If set to Yes, independent or attendant operated cars may be considered for medical recall assignments. They will, however, only be assigned the Medical Emergency if no automatic cars are available. This parameter should be set to match the same parameter on the dispatcher parameter screen.
- Bypass In Car Stop Switch on Med Rec Ph 1?
  If set to Yes, the in-car stop switch will be disabled when the car is on Medical Emergency Phase I.
  If set to No, the stop switch remains active.
- Med1 Overrides Fire1 if Triggered 1st?
  If set to Yes, the car will remain on Medical Emergency operation even if Fire Recall operation is activated.
- Medical Phase 2: Momentary CME Input?
  If set to Yes, the car will go on medical Phase2 with momentary pressure on the in-car medical emergency key switch (momentary on switch). Multiple car calls on medical phase 2 are not allowed.
  If set to No, the car will remain on Medical Phase 2 with constant pressure on the in-car medical emergency key switch (latched input).
- Medical Phase 2 Opens Both Doors?
  If set to Yes, the car will open both front and rear door simultaneously on Medical Emergency Phase II.
- Medical Phase 2 Opens door via DOB?
  If set to Yes, the door open button is required to open the doors on Medical Emergency Phase II.
- Group Car Automatic Med Emergency Ph 2?
  If set to Yes, the car is capable of responding to automatic Medical Emergency calls from the group.
  If set to No, this car cannot answer group Medical Emergency calls.

- Med Ph2 Overrides Fire PH 1:
  When the car is on Medical Emergency Phase II it will respond to Fire recall if this parameter is set to “NEVER”. If the parameter is set to “IF TRIGG 1st” the car will not respond to the Fire Recall if the car was on Medical Emergency Phase II at the time of the Recall. If the parameter is set to “WHEN DR OPEN” it will respond to the recall when it is at a floor with the door open.
- Med Ph 2 Immediate Door Close w/Call?
  If set to Yes, the doors will close immediately when a car call is registered on Medical Emergency Phase II.
  If set to No, the door close button is required.
- Turn Car Off Med Ph 2 at Rec Floor Only?
  If set to “Yes” the car must return to the Medical Emergency recall floor before it is returned to normal service.
- Bypass Car Call Locks on Medical Ph 2?
  If set to Yes, the car call lockouts will be ignored on Medical Emergency Phase II.
- Med buzz on during:
  Options are:
  PH1 RECALLING ONLY: Buzzer turns off after elevator finishes recall to emergency floor.
  ENTIRE PHASE 1: Buzzer remains on until medical phase 2 switch is activated.
  PHASE 1 and 2: Buzzer remains on throughout phase 1 and 2 operation.
- Flash Med Emergency Light (MEL/MELC)?
  If set to Yes, the in-car Medical Emergency light will flash.
  If set to No, the light will stay illuminated.
- Turn on med ph2 only if med ph1 is on?
  If set to Yes, car must first return to medical phase 1 recall floor prior to phase 2 key-switch being honored.
  If set to No, car is placed on medical emergency phase 2 as soon as medical phase 2 key-switch is activated.
- Seismic Run Allowed with Momentary CWL?
  This parameter sets whether the cars will be allowed to run at reduced speed after a counterweight derailment switch activation. The cars will be run at 120 FPM and will remain at that speed until the SRES (seismic reset switch) in the controller is activated.
- Fire Phase 1 key-switch overrides CWL?
  If set to “Yes” the cars will respond to the Lobby Fire recall switch even with an active counterweight derailment switch (CWL input).
- Reduce speed on CWSW/SASW activation?
  This parameter sets whether the cars will immediately run at reduced speed after seismic switch activation (Y). The cars will be run at 120 FPM and will remain at that speed until the SRES (seismic reset switch) in the controller is activated.
- Counter weight zone:
  A value used for earthquake operation (the car must move away from the counterweights). It should be set to the encoder value where the crosshead of the car and the counterweight meet. This feature works in conjunction with the earthquake inputs.

Return to the main menu by pressing the ‘0’ key when the cursor is on RETURN. You can leave the parameter entry screen without saving your data at any time and return to the main menu by pressing the reset button (S1 button on MPU card). Values entered are not permanently stored in memory until the “Write to Non Volatile Memory and Exit” option is selected.

Miscellaneous Parameters

```
Miscellaneous Parameters
Security code entry timeout (sec):          ___
Alarm status trigger time (sec):             _
FAN output normally open?                   Y N
Gen / fan shutdown time (sec):              ___
Alt. odd/even calls on HBF/Disp fail.       Y N
Stop at floor 00 in up dir?  Y N    Down?   Y N
Maximum allowed speed differential         ____
Distance RC to drop before the floor:       ___
Lobby/top flr holiday dr time (0.1 sec)    ____
Holiday operation based on time and day
Time:   on    off     S M T W T F S
       __:__  __:__   _ _ _ _ _ _ _
       __:__  __:__   _ _ _ _ _ _ _
       __:__  __:__   _ _ _ _ _ _ _
       __:__  __:__   _ _ _ _ _ _ _
Inspection speed (fpm):                     ___
Gate/Door lock bypass permission?           Y N
Main contactor hold time (0.1 sec):         ___
MG start/run transfer time (sec):           ___
PWA input normally open?  Motor RPM        ____
Show car status on CE display?              Y N
```

- Security code entry timeout (sec):
  Applies to jobs with security lock out feature only. Sets the allowable time to enter the following sequence: start of code button, desired floor button, up to a maximum of 8 code buttons and the end of code button.
- Alarm status trigger time (sec):
  Sets the time in which an alarm status can trigger the Building Management System to generate an alarm status fault. It is used to de-bounce the feature.
- FAN output normally open?
  If set to Yes, the FAN output (if present) will turn on when the controller desires the car fan to turn off.
- Gen / fan shutdown time (sec):
  Generator / Fan timeout time after all car and hall assignments have extinguished. A typical entry is 180 seconds. The FAN output is only supplied if requested at the time of order.
- Alt. odd/even calls on HBF/Disp fail?
  If set to Yes, the car will alternate between stopping at odd and even floors when communication to the dispatcher is lost.
  If set to No, the car will stop at every valid floor when travelling in either direction.
- Stop at floor 00 in up dir?
  If set to Yes, the car will automatically stop on its way up and cycle its doors for observation at the floor number entered in the parameter. The floor number, starting from one equaling the lowest floor, must be used (not the floor name).

- Stop at floor 00 in down dir?
  If set to Yes, the car will automatically stop on its way down and cycle its doors for observation at the floor number entered in the parameter. The floor number, starting from one equaling the lowest floor, must be used (not the floor name).
- Maximum allowed speed differential:
  Sets the maximum allowed difference between the demanded speed and the actual car speed. If the difference between speeds equals or exceeds the value set by this parameter, for greater than one second, a “Speed Differential Fault” is declared and the car will stop at the next available floor.
- Distance RC to drop before the floor:
  Sets the distance (in encoder counts) that the retiring cam output will be turned off when approaching a floor. Each count = 1/16 inch.
- Lobby/top flr holiday dr time (0.1 sec):
  Min: 10 Max: 3000 Default: 100 Units: tenths of seconds
  Controls the door open time when a car on holiday service reaches the lobby or the top unlocked floor.
- Holiday operation based on time and day:
  Allows holiday service to be activated based on the time and day of the week. Time must be entered in military time.

Note

After changing Inspection Speed, Gate/Door lock bypass permissive, Main contactor hold time, MG start/run transfer time, or Motor RPM, cycle controller power off, then on. This resets the relay board and forces it to read the changed parameter.

- Inspection Speed:
  Sets the demanded inspection speed of the car. Maximum: 120. Minimum: 0. Default: 45.
- Gate/Door lock bypass permissive?
  If set to Yes, gate and door lock bypass switches are enabled.
- Main contactor hold time (0.1 sec):
  Sets the amount of time (in 1/10th second increments) that the main contactor will remain picked after the brake contactors are dropped.

Note

For Keb Torqmax F5 drives, Main contactor hold time should be set to 0.1 seconds.

- MG start/run transfer time (sec):
  Sets the amount of time (in seconds) that the “Start” output for the MG set will stay on before transferring to “Run”.
- PWA input normally open?
  This parameter allows the polarity of the Power Applied input to be reversed.
  If set to Yes, the Power Applied input polarity is set to normally closed. If the PRV signal is present, then the PWA signal is normally closed in all cases.
  If set to Yes, the Power Applied input polarity is set to normally open. If the PRV signal is not present, then the PWA signal is normally open in all cases.

- Motor RPM
  Set to the rated RPM of the motor. This entry is used by the Relay board for math calculations when communicating serially with the KEB F5 drive.

  The Motor RPM parameter, along with the KEB drive LF.20/21/22/23 parameters determines the maximum speed of the elevator. Rated RPM determines the maximum requested speed; KEB parameters determine the maximum allowed speed.
- Show car status on CE display?
  Determines if the CE display will show only car position or position alternating with special status (i.e., fire recall, inspection, etc.).
  If set to Yes, the CE display will alternate between car position and special status.
  If set to No, the CE display will only show the car position.

Note

After changing Inspection Speed, Gate/Door lock bypass permissive, Main contactor hold time, MG start/run transfer time, or Motor RPM, cycle controller power off, then on. This resets the relay board and forces it to read the changed parameter

Return to the main menu by pressing the '0' key when the cursor is on RETURN. You can leave the parameter entry screen without saving your data at any time and return to the main menu by pressing the reset button (S1 button on MPU card). Values entered are not permanently stored in memory until the "Write to Non Volatile Memory and Exit" option is selected.

Simplex / Inconspicuous Riser Parameters

```
Simplex/IR parking retardation (sec)          __
Door open/Car dir lobby time (0.1 sec):       __
Park floor / door (0 = no park):            __F R
Keep lobby door open after parking?          Y N
Reopen door with hall call?                  Y N
Manual car switch operation?                 Y N
Special attendant w/ annunciator oper?       Y N
Auto inconspicuous riser?  Y N   Timeout    ___
Hall lanterns enabled inconsp. riser?        Y N
Shuttle floor1:__F R B  Floor2:__F R B (0=none)
Lobby 1 flr/door __F R  on __:__  off __:__
Lobby 2 flr/door __F R  on __:__  off __:__
Energy status based on time/day
     (0-high performance, 1-energy conserv)
Time:  on    off   Status   S M T W T F S
      __:__ __:__     _     _ _ _ _ _ _ _
      __:__ __:__     _     _ _ _ _ _ _ _
      __:__ __:__     _     _ _ _ _ _ _ _
      __:__ __:__     _     _ _ _ _ _ _ _
Amt hall & car calls before HP switch:       __
Emg pw to next grp timeout Ph1: __     Ph2: __
Emerg pwr control: MASTER
                   SLAVE
                   STAND ALONE
                   SPLIT
```

Note

Access to these parameters is only possible if your car is a simplex or a group car with an inconspicuous riser.

- Simplex/IR parking retardation (sec):
  If a Simplex car or a car running on its inconspicuous riser, is idle (no calls registered) for the period of time set here, it will return to its parking floor. Minimum: 15. Maximum: 999. Default: 15. Units: Seconds.
- Door open/Car dir lobby time (0.1 sec):
  Lobby door open time for a simplex or inconspicuous riser car.
- Park floor / door (0 = no park):
  Determines whether the car will return to the lobby, or another floor, to park if the car is a simplex or running on an inconspicuous riser. On group installations, this parameter is not used. A zero will disable parking. The floor number, starting from one equaling the lowest floor, must be used (not the floor name).

- Keep lobby door open after parking?
  Set to Yes if a simplex car or a car running on inconspicuous riser should park in the lobby with its doors open.
- Reopen door with hall call?
  Set to Yes if a simplex car should reopen its door with a hall call at the floor.
- Manual car switch operation?
  Operational only on Simplex cars using manual doors.
  If set to Yes, the Simplex car is in manual car switch operation mode and all of the car calls except for the bottom and top landing will be disabled.
  If set to No, the Simplex car is in normal operation mode.
- Special attendant w/ annunciator oper?
  If set to Yes, when the car is on attendant operation working off the local hall call riser, the hall calls are not automatically assigned to the car. Instead, the hall calls are displayed on the annunciator panel and the operator answers a hall call by going for a car call coincident with the hall call landing.
  If set to No, when the car is on attendant operation working off the local hall call riser, the hall calls are automatically assigned to the car.
- Auto inconspicuous riser? Timeout:
  If set to Yes, the car has automatic inconspicuous riser. Also, sets the time, in seconds, (if set to “Yes”) before riser will switch back to automatic. Generally set to 30 seconds.
- Hall lanterns enabled inconsp. riser?
  If set to Yes, the hall lanterns will be enabled during inconspicuous riser (ALD input on).
- Shuttle Floor1:
  First floor to be serviced by car when running on express service (shuttle between two floors). The express service input, LKS, must be present and ON for this parameter to operate.
- Shuttle Floor2:
  Second floor to be serviced by car when running on express service. The express service input, LKS, must be present and ON for this parameter to operate.
- Lobby 1 flr/door:
  Simplex car time-triggered lobby floor 1. Times ON and OFF must be entered in 24-hour clock. This allows two lobby floors to be programmed for different times of the day using this parameter in conjunction with the Lobby 2 flr/door parameter.
- Lobby 2 flr/door:
  Simplex car time-triggered lobby floor 2. Times On and OFF must be entered in 24-hour clock.
- Energy status based on time/day:
  To MANUALLY use the energy conservation feature, select the days for which you would like the feature to be active by entering a Y for that day. Set the time period for the feature to be active, in military format. Set a 0 to keep the system on high performance and a 1 to switch to energy conservation.
- Amt hall & car calls before HP switch:
  Enter the number of simultaneously active calls that will trigger dynamic transfer between energy conservation and high performance operation.

- Emg pw to next grp timeout Ph1:
  Setting this parameter on a car tied to Group/Simplex B for emergency power purposes will adjust the amount of time (in minutes) to be given Group/Simplex B to complete its emergency power return Phase 1 before allowing the car to go on emergency power Phase 2. This parameter only affects cars set up as Master for emergency power purposes. Minimum: 0. Maximum: 20. Default: 1.
- Emg pw to next grp timeout Ph2:
  If the car is tied to Group/Simplex B for emergency power purposes and the car is not able to go on emergency power Phase 2, this parameter will adjust the amount of time (in seconds) to be given Group/Simplex B to go on emergency power Phase 2, before the car retries going on emergency power Phase 2. This parameter only affects cars set up as Master for emergency power purposes. Minimum: 0. Maximum: 99. Default: 60.
- Emerg pwr control:
  - Master: This dispatcher initiates Phase1 and Phase2 for the group.
  - Slave: This dispatcher accepts Phase1 and Phase2 inputs from the master.
  - Stand Alone: This dispatcher is a Simplex.
  - Split:

Return to the main menu by pressing the '0' key when the cursor is on Return to Main Menu. You can leave the parameter entry screen without saving your data at any time and return to the main menu by pressing the reset button (S1 button on MPU card). Values entered are not permanently stored in memory until the Write to Non Volatile Memory and Exit option is selected.

Floor Names, PI Outputs, CE Voice Unit

```
Floor Names, PI Outputs, CEVoice Unit
- Return to Main Menu
- Press Enter for Floor Names
- Press Enter for PI Outputs
- Press Enter for CE Voice Unit
```

From here, you can return to the main menu or access the Floor Names, PI Outputs, or CE Voice Unit sub-menus.

Floor Names Menu

This screen allows ASCII character entry to output to the CE Electronics position indicator.

```
Floor Name Entry Screen:
LD# Name    LD# Name    LD# Name    LD# Name
 1   __     17   __     33   __     49   __
 2   __     18   __     34   __     50   __
 3   __     19   __     35   __     51   __
 4   __     20   __     36   __     52   __
 5   __     21   __     37   __     53   __
 6   __     22   __     38   __     54   __
 7   __     23   __     39   __     55   __
 8   __     24   __     40   __     56   __
 9   __     25   __     41   __     57   __
10   __     26   __     42   __     58   __
11   __     27   __     43   __     59   __
12   __     28   __     44   __     60   __
13   __     29   __     45   __     61   __
14   __     30   __     46   __     62   __
15   __     31   __     47   __     63   __
16   __     32   __     48   __     64   __

Load Default Floor Names
Return to Floor Name, PI, CE Screen
```

Floor names will default to those entered on the controller main screen. This parameter assigns floor names to landings to use with the CE position indicator. Please note that this parameter does not affect the floor landing names shown on the controller main screen.

Binary PI Outputs

This screen sets binary position indicator output that will be sent for each floor the car serves. The first column “LD” sets the floor position in the building. Position 1 will always be the lowest landing that this car serves. The second column “PI#” sets the binary output for that floor.

```
Binary PI Outputs: (1st Landing Always 1)
LD#  PI#   LD#  PI#   LD#  PI#   LD#  PI#
 1   __    17   __    33   __    49   __
 2   __    18   __    34   __    50   __
 3   __    19   __    35   __    51   __
 4   __    20   __    36   __    52   __
 5   __    21   __    37   __    53   __
 6   __    22   __    38   __    54   __
 7   __    23   __    39   __    55   __
 8   __    24   __    40   __    56   __
 9   __    25   __    41   __    57   __
10   __    26   __    42   __    58   __
11   __    27   __    43   __    59   __
12   __    28   __    44   __    60   __
13   __    29   __    45   __
14   __    30   __    46   __
15   __    31   __    47   __
16   __    32   __    48   __

Return to Floor Name, PI, CE Screen
```

Default entries may only be changed if the car has a blind shaft. The value for the first landing is always 1. Values for other landings must be equal to or one greater than the previous landing. Works in conjunction with Binary PI start at 0 or 1 on the Car Operating Devices Parameter Menu.

CE Voice Unit

This menu allows the user to enter the message that will be sent to the optional CE Voice Annunciator unit for each landing and for each event.

```
CE Voice Annunciator Messages:
See Message Description at the Bottom
MSG#   LD#  CE#  LD#  CE#  LD#  CE#  LD#  CE#
00       1   __   16   __   31   __   46   __
00       2   __   17   __   32   __   47   __
00       3   __   18   __   33   __   48   __
00       4   __   19   __   34   __   49   __
00       5   __   20   __   35   __   50   __
00       6   __   21   __   36   __   51   __
00       7   __   22   __   37   __   52   __
00       8   __   23   __   38   __   53   __
00       9   __   24   __   39   __   54   __
00      10   __   25   __   40   __   55   __
00      11   __   26   __   41   __   56   __
00      12   __   27   __   42   __   57   __
00      13   __   28   __   43   __   58   __
00      14   __   29   __   44   __   59   __
00      15   __   30   __   45   __   60   __
Descr: Please stand clear of the closing
doors.
Return to Floor Name, PI, CE Screen
```

The first column of information sets the CE slot data number that will be sent to the CE Voice unit when the controller event condition that is shown at the bottom of the screen next to “Descr:” occurs. For example, if the controller event assigned to the first output is described as “Fire Recall to Lobby” under Descr:, when the car is being recalled to the Lobby for Fire Service, this slot data number will be sent to the CE Voice unit.

- Refer to CE Voice unit documentation for a list of available messages.
- Select the message that you would like the unit to play when the car is being recalled to the Lobby for Fire Service.
- Scroll down through the rest of the “MSG#” column to set the appropriate CE Voice message for the described events.

The next set of columns sets the message to be played at each floor. The left column sets the building position (the bottom floor that the car can go to is always 1 regardless of floor name) and the right column sets the CE Voice message number. Again referring to the CE Voice unit documentation for a list of available messages, select the message that you would like the unit to play when the car is at that particular floor.

The following messages may be annunciated:

- This elevator is in fire return to the main floor. Please exit the building in a safe manner.
- This elevator is in fire return to an alternate floor. Please exit the building in a safe manner.
- Please stand clear of the closing doors.
- This elevator is on independent service.
- This car is in overload status. Please remove part of the load to resume service.
- This elevator is now on emergency power and the car is returning to the main level.
- This car is now on inspection service.
- The seismic sensor has been activated. Please exit the elevator when the doors open.
- This elevator is needed because of a medical emergency.
- Please allow the doors to close.
- This car is out of service.
- This elevator is full. Please wait for the next available elevator.
- A security card is required.
- The emergency stop switch has been activated.
- Do not be alarmed. This car is now in firefighter's return service.

Event Disable Parameters

This menu allows the user to stop certain events from registering in the event log. The controller will still behave as it should when the event occurs, but the event will not be noted in the event log. This is helpful if there are certain events that occur frequently on a particular job that you do not wish to log. To view what each event is, use the cursor to move to the event number. The event description will be shown at the bottom of the screen.

```
Event Disable Parameters:
See event description at the bottom of
this screen.
 2 Y N                77 Y N
 4 Y N                92 Y N
 5 Y N                95 Y N
 6 Y N                96 Y N
 7 Y N               103 Y N
 8 Y N               148 Y N
 9 Y N               149 Y N
10 Y N               151 Y N
15 Y N               152 Y N
16 Y N
17 Y N
18 Y N
19 Y N
21 Y N
25 Y N
26 Y N
27 Y N

Descr: Car Door Failed to Open          Return
```

Car Call Lock Entry

```
Car Call Locks Front and Rear
B  NN
S  NN
L  NN
2  NN
3  NN
4  NN
5  NN
6  NN

Return to Main Menu
Legend -
Left Entry Front Car Call Locks
Right Entry Rear Car Call Locks
N = Car Call is Unlocked
Y = Car Call is Locked
```

This menu allows you to lock out car calls for specific floors. These locks will not be overridden by any hardware locks but are overridden for Fire Service operation. This menu is helpful if there is a particular floor in the building that is not in use and the customer wants that floor locked out until a later time.

Hall Call Lock Entry (Simplex / IR only)

```
Simplex Up and Down Hall Call Locks

Return to Main Menu
Press Enter for Up Hall Call Locks
Press Enter for Down Hall Call Locks
```

For Simplex or Inconspicuous Riser cars only, this menu allows you to access Up and Down Hall Call Lock sub-menus. The form of the two sub-menus is much alike. The Front sub-menu is shown below.

```
Simplex Up Hall Call Locks
B  N N
S  N N
L  N N
2  N N
3  N N
4  N N
5  N N
6  N N
R  N N

Return to Hall Call Lock Screen
*These apply for a Simplex car only.
Left Entry - Front Up Hall Call Lock
Right Entry - Rear Up Hall Call Lock
N = Up Hall Call is Unlocked
Y = Up Hall Call is Locked
```

Up Hall Lock Entry (Simplex / IR only) Menu

This menu acts the same as the car call lock entry menu. It is only accessible on simplex cars or cars with inconspicuous risers.

Down Hall Lock Entry (Simplex / IR only) Menu

This menu acts the same as the car call lock entry menu. It is only accessible on simplex cars or cars with inconspicuous risers.

Security

Security features are available in standard and custom configurations.

Figure 10.3 Typical Security Example

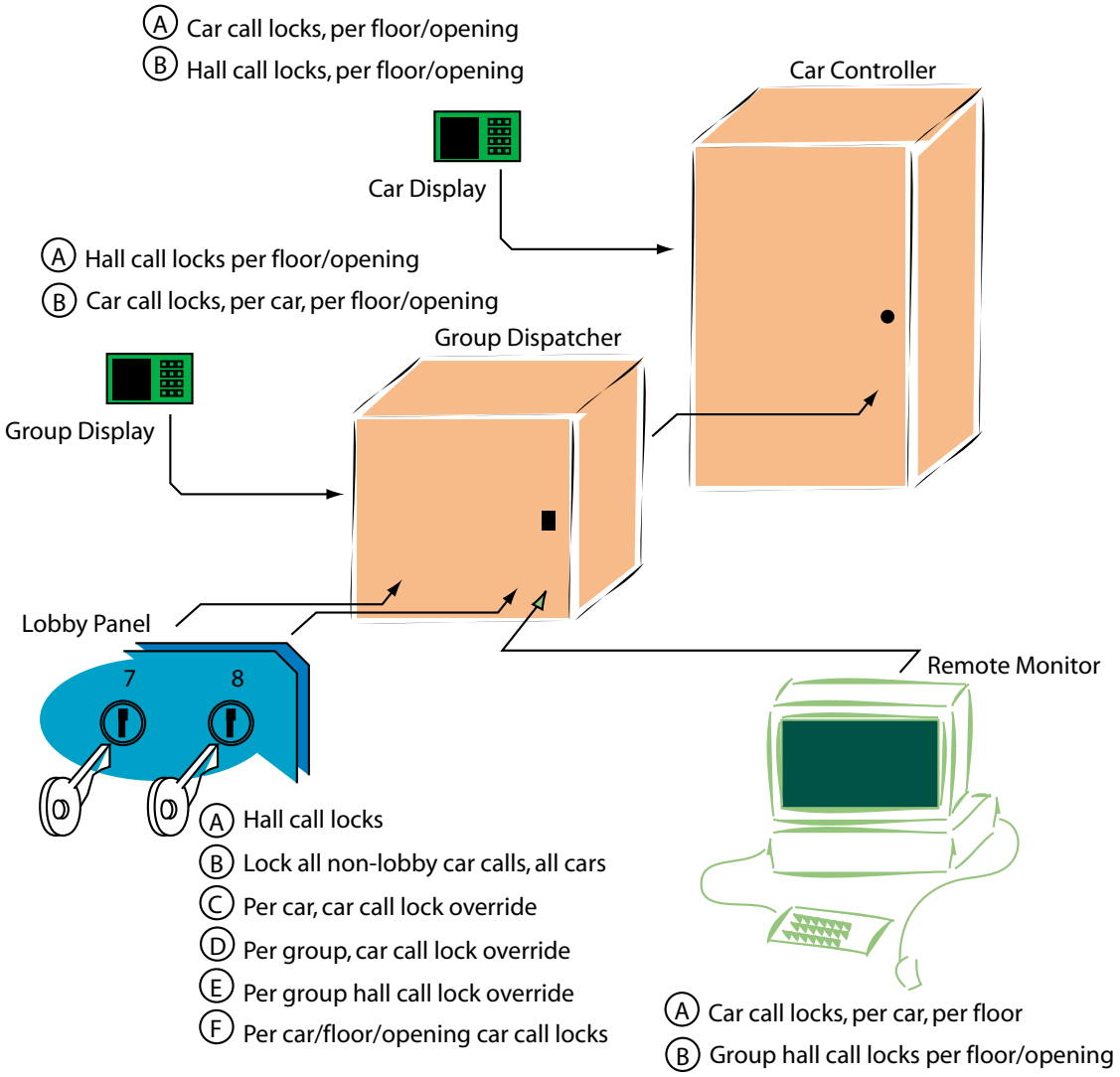

Floor Landing Value

This menu is where the floor locations for the system are located. After a learn trip is completed, the menu item “Press Enter to Get Floor Vals From the Encoder” is selected. This retrieves the values from the encoder that were observed on the learn trip. It may be desirable to ‘touch up’ some of the floor values after the learn trip. To do this, use the key pad on the display card and manually change the value for a particular floor to that which will allow the car to stop exactly floor level.

Note

We recommend that the learned values only be changed by a maximum of 4 counts. If more correction is needed, the floor magnet must be removed and properly positioned. After this is done, another learn trip will be required. To apply value changes, return to the main menu and write them to nonvolatile memory.

Return to the main menu by pressing the ‘0’ key when the cursor is on Return to Main Menu. You can leave the parameter entry screen without saving your data at any time and return to the main menu by pressing the reset button (S1 button on MPU card). Values entered are not permanently stored in memory until the “Write to Non Volatile Memory and Exit” option is selected.

Pretorque, Learn Trip

Allows you to access the Learn Trip and Pretorque submenus. Please refer to “Controller Pre-torque Setup” on page 9-4 for pretorque operating instructions.

```
Pretorque

Return to Main Menu
Press Enter for Pretorque Setup
Press Enter for Learn Trip
```

Pre-Torque Set Up

This sub-menu sets up the controller pretorque system. It is only accessible if the parameter on the motion parameters menu is set to allow pretorque. The following illustration provides an example of a typical screen.

```
              Pretorque Setup
Release brake and check for rollback
Dr Clsd:N MG:N Power:N Pulse:OFF  Brake:N
Encoder:Present  017983   Top  0018000
                        Bottom  0002000
Pulse height: +/-______  (max 3200)
 Turn on strain gauge calibration-CAL:OFF
 Move to Next Screen Section
-------------------------------------
Pulse Height: Bottom empty    +/-______
              Top empty       +/-______
              Top full load   +/-______
Weight Value: Bottom Empty    000
              Top Empty       000
              Top Full Load   000
Weight of Load (LBS)  00000
Present Weight Value   038
 Move to Previous Screen Section
 Return to Learn Screen
```

Note

If this job is not an MG job, MG: and Pulse: selections will not appear.

Learn Trip Menu

This menu item allows the microprocessor to start the car on an automatic learn trip up the hoistway to learn the position of all floor magnets.

```
 Return to Main Menu

 Press Enter for Pretorque Setup.
 Press Enter for Learn Trip.
ARE YOU SURE YOU WANT TO DO LEARN TRIP?
            -Yes-     -No-

 Waiting for Encoder Communications!!
```

Note

The car must be on Automatic operation and level with the bottom floor before the learn trip is initiated. Once the Learn Trip has been completed it is necessary to go to the “Floor Landing Values” menu and select the menu item “Press Enter to Get Floor Vals From the Incremental Encoder”. This retrieves the values observed on the learn trip from the encoder.

Terminal Slowdowns

This menu sets the various functions of the Terminal Slowdown (TSD) processor. Please refer to "General Information" on page 8-1 for a more detailed explanation of these functions.

```
Terminal Slowdowns:

NTS deceleration rate (ft/s2)    _:__
ETS trip rate         (ft/s2)    _:__

Press Enter for Terminal Slowdown Learn
Press Enter to Disable Terminal
Slowdowns (Inspection / Test only)
Press Enter for NTS Test
Press Enter for ETS Test
Press Enter for Buffer Test

Return to Main Menu
```

- NTS deceleration rate (ft/s^2):
  Sets the rate at which the limit processor will slow the car to stop it at a terminal floor if the normal stopping means is insufficient to slow the car. Min 1.0. Max: 9.9. Default: 4.5.
  Should be initially set to 0.5 ft/s^2 greater than the greatest acceleration rate set on the Motion Parameters screen. Please refer to "Motion Parameters" on page 10-22.
- ETS trip rate (ft/s^2):
  Controls the rate at which the limit processor will declare an ETS trip, opening the safety circuit, if the car requires a rate equal to or greater than the value of this parameter in order to stop at a terminal floor. Min 1.0. Max: 9.9. Default: 4.5. Must be set high enough to allow a fully loaded car to perform an "NTS test" at the terminal landings.

Note

NTS and ETS rates may be changed after learning the terminal slowdowns. **In order for the changes to be implemented, you must cycle power to the controller.** It is not necessary to re-learn the slowdown switches.

- Press Enter for Terminal Slowdown Learn
  Places the TSD processor in the learn mode. In this mode, the car is run on Automatic Operation through the hoistway so the TSD processor can learn the speed of the car and the locations of the limit switches and terminal floors. Prompts on the Diagnostic Screen will direct the user where to run the car to perform the learn procedure. Refer to Section 7 for more detailed information.
- Press Enter to Disable Terminal
  Places the TSD processor in the disabled mode. This mode is only available while on door disconnect or inspection operation. Placing the car on Automatic Operation while in the mode will cause the TSD processor to trip, opening the safety circuit and disabling the car.
- Press Enter for NTS Test
  Allows the system to perform an NTS test. In this mode, the MPU will ramp up to speed and not initiate a stop. The TSD processor will ramp the speed command down as the car approaches a terminal floor. This allows the NTS function of the TSD processor to be easily tested.
- Press Enter for ETS Test
  Allows the system to perform an ETS test. In this mode, the MPU will ramp up to speed and not initiate a stop. The NTS value from the TSD processor will be locked, causing the car not to slow down as it approaches the terminal floor. This causes the TSD processor to declare an ETS trip, allowing the ETS function of the TSD processor to be easily tested.
- Press Enter for Buffer Test
  Allows the system to perform a buffer test. In this mode, the MPU will ramp up to speed and not initiate a stop. The NTS value from the TSD processor will be locked, causing the car not to slow down as it approaches the terminal floor. The ETS value from the TSD will also be locked, preventing it from declaring an ETS trip. This causes the car to ramp up to speed and continue until the safety circuit opens, allowing the buffers to be tested.

Modem Parameters Menu

```
This Page is Applicable for Simplex
Cars When Modem Dial Out is Enabled.
 ■-OK-
Modem Parameters:

Modem Parameter Entry

Phone #____________
Job ID#________
Init  #_________________________________
Connect volume (0=off 3=loudest): _
```

Password / Job Config / Time / Clear Events

```
Password/Job Config/Time/Clear Events Parameters:
Parameter password protection enabled: Y N


- Change password

Car group # (1 - 10)  main: __

Dispatcher communication via:
  Car MPU LON NET B to Disp MPU LON NET B


TIME __:__   __/__/__ SUNDAY

Clear event memory

Do Not Set. Internal Use Only. 000 Return
```

- Parameter Password Protection Enabled:
  When enabled, this protects all parameters from being changed without valid password entry. All parameters may be viewed but cannot be saved unless the correct password is entered.
- Change Password:
  Use this function to change the system password.
- Car group # (1 - 10) main:
- Dispatcher Communication Via:
  Sets the method by which the car communicates with the dispatcher. The most common method is via LON channel B.
  - Simplex:
  - Car MPU SIO1: RS-232 Port: (Not used.)
  - Car MPU LON NET B to Disp MPU LON NET B
  - Car MPU SIO2 Optically Isolated Port (Install serial adapter on header H2)
  - Other (Reserved. Not yet used.)

If communication is via another method, documentation will be provided by MCE.

- Time:
  Set time, date, and day of the week.
- Clear Event Memory:
  Select to clear MPU event memory.
- Do Not Set. Internal Use Only. 000 Return

Controller Event Descriptions

While all of the faults listed below refer to IntellaNet cars, some may not appear on all installations depending on the hardware configuration. The events listed are detected by the car and/or Building Management System. Events consist of faults, status changes or a need for elevator maintenance.

- R= Recoverable event
- U= Unrecoverable event needs manual car or encoder MPU reset to be cleared.

Fault Inputs

Control inputs may be configured to allow external fault detecting circuitry to provide input. If these inputs coincide with or provide expanded detail for a particular fault, that fault may not be displayed. Instead, a fault message from one of the coinciding fault inputs will be displayed. For example, special fault inputs are present on cars configured for New York City Department of Citywide Administrative Services operation. (Please refer to “Optional Inputs” on page 10-8 for inputs FI1 - FI24.)

In the table below, if a message may be replaced by an alternate fault input, it is marked by an “N” is the last column. Conversely, if a configured fault input is required for a message to be displayed, it is marked by a “Y” in the last column.

Table 10.2 Controller Event Table

#	Event Name	Event Conditions	Rec	FI
1	Safety Circuit Opened	Safety circuit opened.	R	N
2	Car Door Failed to Open - n floor	Door open motor on for 12 sec and door open limit did not make.	R	
3	Door Close Failure at Floor	Door close limit fails to make after 10 consecutive cycles.	R	
4	Electric Eye Failure	Electric Eye not broken after 10 consecutive car calls.	R	
5	Safety Edge Failure	Safety Edge on more than 30 sec after nudging time has expired.	R	
6	Weighing Device Failure	Input from load weighing device is on while the door is closed and the car is parked for more than 3 seconds.	R	
7	Stuck Car Call Button: n floor	Car call is on continuously for a full door open cycle.	R	
8	Stuck Hall Call Button - n floor	Hall call at car's floor with car's direction is on continuously for a full door open cycle.	R	
9	PWA/Direction Missing at Start / Start Control Failure	Apply power output is on for 6 sec with no power applied feed back input.	R	
10	Drive Time Supervision	During a run the car speed is under the minimum speed for 10 seconds.	R	
11	Door Lock Failure	Door locks fail to make after door cycles.	R	N
12	Brake Release Failure Shutdown	3 consecutive occurrences of event no. 103 or event no. 92 without the car changing direction or “run through brake” time expiring.	U	
13	Overspeed shutdown	Overspeed input on or speed exceeded overspeed parameter value.	U	
14	Generator Failed to Start	Generator run output on for 25 sec with no generator input on.	R	
15	Generator Failed to Shut Off	Generator run output off for 10 sec with generator input on.	R	
16	Brake Set Failure	Release brake output is off for 1.5 sec and the brake fails to set.	R	

Table 10.2 Controller Event Table

#	Event Name	Event Conditions	Rec	FI
17	Dispatcher Communication Failure	Car hasn't received valid data from the dispatcher or dispatcher hasn't received valid data from a car for more than 15 seconds.	R	
18	Door Lock Open out of Door Zone	Door Lock(s) open while car is in motion and out of the door zone (Clipped Door Lock).	R	N
19	Door Close Limit Open out of Door Zone	Door close limit open while car is in motion and out of the door zone.	R	
20	SCR / Regulator Shutdown.	SCR / Regulator tripped more than once in 2 minutes or reset attempt failed.	R	
21	Direction Fault	Actual car direction differs from desired direction.	R	
22	Normal Up Limit	Normal up limit input on while the door locks are made, the safety circuit is made and the car is moving in the up direction.	R	
23	Normal Down Limit	Normal down input on while the door locks are made, the safety circuit is made and the car is moving in the down direction.	R	
24	Alarm Status	Alarm bell has been on for more than 2 seconds in a 1 minute period.	R	
25	Door Cannot Close at Floor	Door close limit fails to make after the door cycles.	R	
26	Door Lock Open in Door Zone	Door locks fail to make after 3 consecutive door cycles.	R	N
27	Motor Generator / SCR Off	Motor Generator /SCR shutdown via key-switch in machine room, car or hallway.	R	
28	Reserved			
29	Control Fuse	Safety Circuit Line Fuse open.	R	Y
30	Loop Overload	Loop overload is open.	R	Y
31	Tripped SCR / Regulator	SCR or Regulator has tripped.	R	Y
32	Governor Switch	Governor switch is open.	R	Y
33	Top Final Limit	Top final limit switch is open.	R	Y
34	Bottom Final Limit	Bottom final limit switch is open.	R	Y
35	Pit Stop Switch	Pit stop switch is open.	R	Y
36	Compensation Cable Switch	Compensation cable switch is open.	R	Y
37	Safety Plank Switch	Safety plank switch is open.	R	Y
38	Broken Tape Switch	Broken tape switch is open.	R	Y
39	Top of Car Stop Switch	Top of car stop switch is open.	R	Y
40	In Car Stop Switch	In car stop switch is open.	R	Y
41	Side Exit Door	Side exit door switch is open.	R	Y
42	Escape Hatch	Escape hatch switch is open.	R	Y
43	Limit Board	Limit board has tripped.	R	Y
44	Controller Stop Switch	Controller stop switch is open.	R	Y
45 - 52 Reserved				
53	Hoist Motor Field	Hoist motor field loss open.	R	Y
54	Door Operator Overload	Door operator overload input on.	R	Y
55	Spare			Y
56	Rear Door Locks Open in DZ	Rear door locks fail to make after 3 consecutive door cycles, with car in the door zone.	R	Y
57	Front Door Locks Open in DZ	Front door locks fail to make after 3 consecutive door cycles, with car in the door zone.	R	Y
58	Rear Gate Switch Open in DZ	Rear gate switch fails to make after 3 consecutive door cycles, with car in the door zone.	R	Y

Table 10.2 Controller Event Table

#	Event Name	Event Conditions	Rec	FI
59	Front Gate Switch Open in DZ	Front gate switch fails to make after 3 consecutive door cycles, with car in the door zone.	R	Y
61	Rear Door Locks Failure	Rear door locks fail to make after 10 consecutive door cycles, with car in the door zone.	R	Y
62	Front Door Locks Failure	Front door locks fail to make after 10 consecutive door cycles, with car in the door zone.	R	Y
63	Rear Gate Switch Failure in DZ	Rear gate switch fails to make after 10 consecutive door cycles, with car in the door zone.	R	Y
64	Front Gate Switch Failure in DZ	Front gate switch fails to make after 10 consecutive door cycles, with car in the door zone.	R	Y
65	Rear Door Locks Open Out of DZ	Rear door locks are open, with car out of the door zone.	R	Y
66	Front Door Locks Open Out of DZ	Front door locks are open, with car out of the door zone.	R	Y
67	Rear Gate Switch Open Out of DZ	Rear gate switch is open, with car out of the door zone.	R	Y
68	Front Gate Switch Open Out of DZ	Front gate switch is open, with car out of the door zone.	R	Y
69	Reserved			
70	Possible Counterweight Derail-ment	Counterweight displacement switch is on.	R	
71	SCR Overheat	SCR Overheat (Input OH activated).	R	
72	Simplex/IR Hall Button Failure	Simplex or Inconspicuous Riser hall button fuse or com-munication to hall station lost causing the HBF input to be off for 15 seconds. If this event occurs while the car is on simplex or inconspicuous riser service the car will begin wild call@ emergency dispatcher service.	R	
73	Gate Contact Fault	Car gate and door open limit input on at the same time while the door is open.	R	
74	Encoder Frozen/No Car Motion	Car is moving but encoder count has not changed in 1.5 seconds. Could also caused by AP@ contact failure on motor generator jobs.	R	
75	Broken Tape/ Disconnected Cable	Encoder has detected a broken tape or has lost communi-cation with the encoder sensor box.	U	
76	Encoder Com Fail Shutdown	Indicates an interruption in the serial communication between the car and encoder board.	R	
77	Encoder Excess Deviation	Indicates that the deviation between the encoder value and the expected position, from the floor magnet sensor, is greater than ten counts, when the car is slowing down to a floor.	R	
78	Encoder Sensor Failure	One of the optical sensors becomes inoperative. The car is still capable of running with decreased resolution. Diag-nostics are provided on the car mounted encoder elec-tronics that will help determine which sensor is inoperative.	R	
79	Encoder Excess Guide Wear	The encoder tape guides have worn approximately 1/8 inch. They should be replaced as soon as possible.	R	
80 - 90 See Below				
91	Reserved			
92	Brake Dropped During Run	Brake input was unexpectedly lost while car was in motion.	R	
93-94	Reserved			
95	Car Gate Open in Door Zone	Car Gate fails to close after door cycles.	R	N

Table 10.2 Controller Event Table

#	Event Name	Event Conditions	Rec	FI
96	Car Gate Open out of Door Zone	Car Gate is open while car is in motion and out of the door zone.	R	N
97	PWA Not Dropping at Stop / Power Applied Fault	Power Applied input on for 4.5 seconds after the apply power output has dropped.	R	
98	Limit Board Shutdown	Limit board tripped more than once in 2 minutes or reset attempt failed.	R	
99	Spare			
100	Door Lock Contact Fault	Door lock and door open limit on at the same time while the door is open.	R	
101	Multi Sensor Failure	Two out of three encoder sensors have failed. Must reset encoder to recover.	U	
102	Reserved			
103	Brake/Direction Did Not Pick	Brake fails to lift for longer than a user-entered parameter time. May be caused by failure in the direction circuit, as well.	R	
104	RPR/Overloads Tripped	AC/DC overload open or RPR tripped. MG controls only.	R	
105	Invalid Door Zone Magnet	Encoder reading indicates car is in door zone but the door zone input from the magnet is not seen. This fault is not recoverable for Canadian jobs.	R	
106	Slowdown Failure	Unexpected slowdown limit open. Event is not detected until the car doors have opened.	U	
108	Leveling Monitor Fault/Stuck In leveling	LEV input does not agree with the status of LEV output. (Australia only on Plus/Ultra).	U	
109 - 145	Reserved			
146	Brake Set Failure Shutdown	1 or 5 consecutive occurrences of event no. 16 have occurred, depending on the presence and setting of the “Brake set failure immediate shutdown” parameter.	R	
147	Car Gate Failure	No car gate after 10 consecutive door cycling attempts.	R	N
148	Door Close Limit Relaxed	Door close limit of a parked car does not remake after applying power on the door for 60 seconds.	R	
149	PWA/Direction Lost During Motion	Power applied input lost while car was in motion.	R	
150	PWA/Direct Fail. 2 Min. Shutdown	Event no 9 has occurred three times without clearing or event no. 149 has occurred three times with car running in the same direction. Car will retry moving after two minutes.	R	
151	Strain Gage Did Not Set to Zero	Percent full load of an empty car not equal to zero after a strain gage calibration was completed.	R	
152	Speed Differential Fault	The difference of actual speed and desired speed is larger than the maximum allowed speed differential for more than one second.	R	
153	Seismic Switch Activated	The seismic switch was activated.	R	
154	SCR/Regulator Tripped	SAF and REG inputs are on simultaneously for 300 ms. On the Intellanet only REG has to be on for 300 ms.	R	
155	Limit Board Tripped	SAF, LIM and REG inputs are on simultaneously for 300 ms. On the Intellanet only LIM and REG have to be on for 300 ms.	R	
156	Car station communication fault	No communication between the car and the car station for 10 seconds.	R	
157-161	Reserved			

Table 10.2 Controller Event Table

#	Event Name	Event Conditions	Rec	FI
162	Door Zone Monitor Fault	DZ input does not go off when the car is more than 3" from the floor for 100ms Canada only.	U	
163	Redundancy Failure	Failure of one or more of the redundant relays required by Canada B44 Code to pick or drop as demanded.	U	
164	Stop Switch Redundancy Failure	Failure of one or more of the redundant outputs around the in car stop switch required by Canada B44 Code to drop as demanded.	U	
165-171	Reserved			
172	Fire Stop Switch Override Monitor Fault	Fire stop switch override monitor input is high when the processor is not demanding outputs FRX or FRXA to be on.	R	
173	Gate Access Monitor Fault	Gate access monitor input is high when the processor is not demanding outputs GAC or GACX to be on.	R	
174	Bottom Access Monitor Fault	Bottom access monitor input is high when the processor is not demanding outputs BAC, or BACX to be on.	R	
175	Gate Contact Monitor Fault	The gate contact monitor input is turned on when the car door (gate) switch is turned off and the processor is not demanding the 'GBYP' output to be on.	R	
176	Level / Door Lock Monitor Fault	The level / door lock monitor input is turned on when the 'DL' relay and the 'DBYP' and 'LEV' outputs are demanded to be off.	R	
177	Door Zone Monitor Fault	The door zone monitor input is turned on when the door zone input is turned off.	R	
178	Sequence Run Monitor Fault	The sequence run monitor input is turned on when the processor is demanding the 'APW' output to be off.	R	
179	Brake Monitor Fault	The brake monitor input is turned on when the processor is demanding the 'RBK' output to be off.	R	
180	Proving Fault	The PRV and PWA inputs have not gone high before a run has been demanded.	R	
181	Top Access Monitor Fault	Top access monitor input is high when the processor is not demanding outputs TAC, or TACX to be on.	R	
182	Relay Monitor Shutdown Fault	Faults 172 – 179, 181, or 183 failed to clear after three consecutive attempts to run the car.	U	
183	Run Enable Fault	RE (Run Enable) output does not match commanded state.	R	
184	Proving Release Fault	The PRV input has not gone low after the car started its run.	R	
185	Gripper Overspeed Fault	Governor opened causing gripper input to turn on.	U	
186	Gripper Unintended Movement	Car gate or door locks input off and car moves our of door zone.	U	
187	Gripper Redundancy/Rel Cycle Fault	DZ/CG/DG contact input does not match serial input on CAN network, or 5 consecutive gripper relay cycling failures.	U	
188 - 199	Reserved			

The following events are detected when the controller or dispatcher is connected to the Building Management System:

Table 10.3 Building Management System Related Events

#	Event name	Event conditions	Rec	FI
80	Independent Service	Car is running on independent service.	R	
81	Inspection Service	Car is on inspection service.	R	
82	Fire Service Phase I	Car is on fire phase I operation.	R	
83	Fire Service Phase II	Car is on fire phase II operation.	R	
84	Encoder Re-synchronization	Car is moving at low speed to determine its position in the shaft.	R	
85	Car MPU Reset	The car MPU reset either via manually pushing the reset button on the board, a power up, or due to a watchdog timer generated reset.	R	
86	Seismic Activity Switch	Seismic activity switch dispatcher input or counterweight switch car input is ON.	R	
87	Hall Button Failure	Simplex or Dispatcher hall button fuse is blown.	R	
88	Emergency Power Operation	The system is running on the emergency generator rather than on normal power.	R	
89	Service Mode	BMS generated car status used for diagnostic purposes.	R	
90	Car Not Responding	Car not responding to dispatcher assignments.	R	

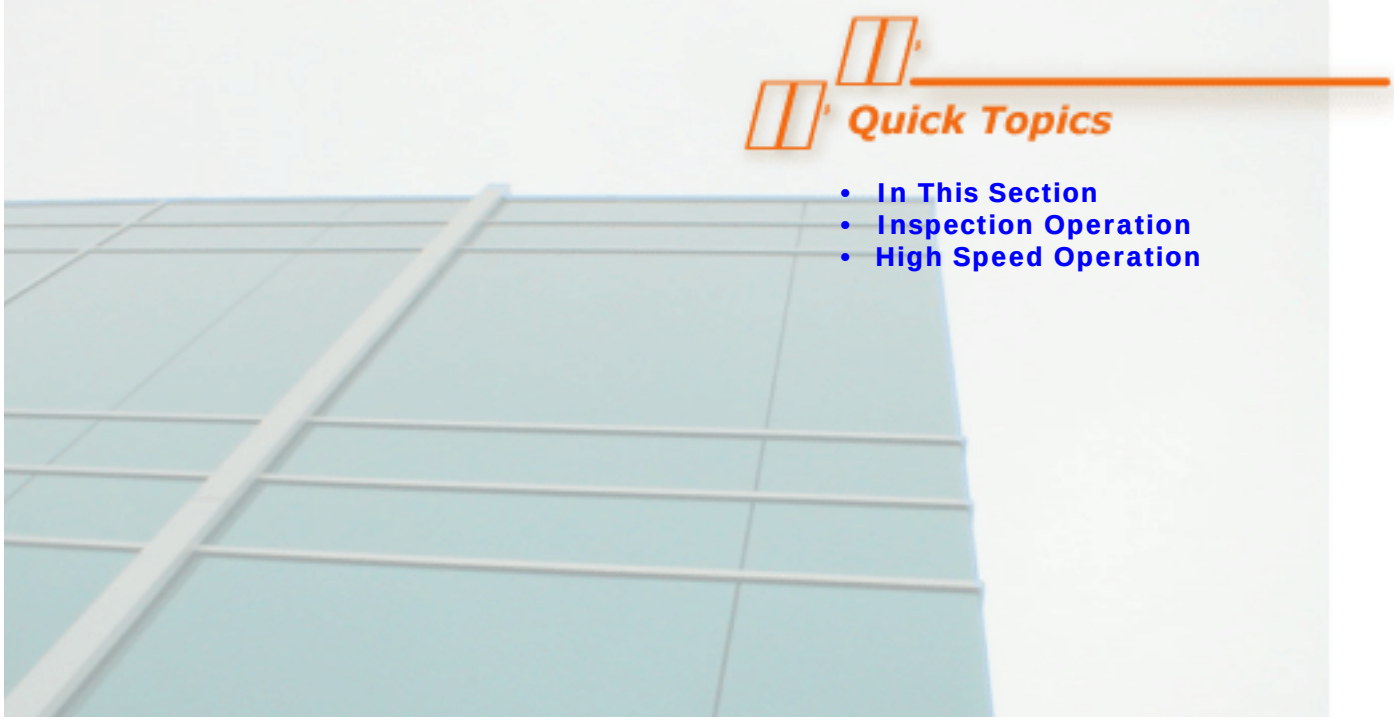

Sequence of Operation

In This Section

This section describes controller sequence of operation in Inspection and High Speed operating modes.

Danger

Elevator control products must be installed by experienced field personnel. This manual does not address code requirements. The field personnel must know all the rules and regulations pertaining to the safe installation and running of elevators.

11

Inspection Sequence of Operation

The following is a step-by-step procedure that will walk you through the inspection sequence of operation. After each step, you will find some notes on where to look if the described step does not occur.

1. Is the “INS” relay energized on the controller?
   - Check to see if the car is on cartop or in-car inspection, line 51 of the wiring diagrams.
   - Check to see if the “CTOP” output is turned off at line 52 of the wiring diagrams. CTOP will be off if the car has seismic operation and the control system has detected a derailed counterweight.
2. Place car on inspection on controller. Try to run car up and down using toggle switch on relay board. Does the car run? If so, go to Automatic Operation troubleshooting procedure.
3. Is D55 (Safety) LED on the relay board illuminated?
   - Check for power at fuse F1 and controller terminal AC2 at line 35 of the wiring diagrams.
   - Check safety circuit, line 41 of the wiring diagrams.
4. Is the ‘G’ relay picked?
   - Check for open gate switch, line 43 of the wiring diagrams.
5. Is D53 (Ready) LED on the relay board illuminated?
   - Bad relay board. Cycle power to the controller. If problem persists replace relay board.
6. Is D49 (ETS OK) LED on the relay board illuminated?
   - The TSD processor has determined there is an ETS fault. Refer to Chapter 8 for TSD troubleshooting.
7. Is D50 (Drive OK) LED on the relay board illuminated?
   - Check for drive or regulator fault. Refer to the high speed adjustment instructions for each motor drive system for a detailed explanation of faults.
8. Is D51 (Locks) LED on the relay board illuminated?
   - Check for open door lock, line 45 of the wiring diagrams.
9. Is D48 (Auto) LED on the relay board turned off?
   - Car is not on inspection operation. Confirm that the relay board inspection switch is in the “INSP” position. If it is, replace the relay board.
10. Is D47 (UPN) LED on the relay board illuminated?
    - Check for open up normal limit switch, line 55 of the wiring diagrams.
11. Is D46 (DNN) LED on the relay board illuminated?
    - Check for open down normal limit switch, line 56 of the wiring diagrams.
12. Are the PWA and PRV inputs on the Display Card highlighted?
    - Refer to the wiring diagrams and troubleshoot the PWA and PRV signals to the Relay Board to ensure that both signals are high when the car is stopped.
13. Hold the INSP UP/DOWN toggle switch in the UP position. Does the IUP input on the display card become highlighted?
    - Replace the relay board.

14. Hold the INSP UP/DOWN toggle switch in the DOWN position. Does the IDN input on the display card become highlighted?
    - Replace the relay board.
15. While holding the INSP UP/DOWN toggle switch in the UP position, does the 'DL' relay pick?
    - Check for relay board faults on the display card. Refer to Section 10 for an explanation of faults. If no faults are displayed, cycle power to the controller and re-attempt to run. If still no faults are displayed, replace relay board.
16. While holding the INSP UP/DOWN toggle switch in the UP position, does the 'SR' relay pick?
    - Refer to line 47 of the wiring diagrams. Check for 110 VAC from TP5 to ground. If no voltage is present, replace the 'G' relay.
    - Refer to line 47 of the wiring diagrams. Check for 110 VAC from TP7 to ground. If no voltage is present, replace the 'DL' relay.
    - Refer to line 47 of the wiring diagrams. Check for 110 VAC from TP10 to ground. If no voltage is present, check for relay board faults on the display card. Refer to Section 10 for an explanation of faults. If no faults are displayed, cycle power to the controller and re-attempt to run. If still no faults are displayed, replace relay board.
17. While holding the INSP UP/DOWN toggle switch in the UP position, does the 'B' relay pick?
    - Refer to line 47 of the wiring diagrams. Check for 110 VAC from TP8 to ground. If no voltage is present, replace the 'SR' relay.
    - Refer to line 47 of the wiring diagrams. Check for 110 VAC from TP9 to ground. If no voltage is present, check for relay board faults on the display card. Refer to Section 10 for an explanation of faults. If no faults are displayed, cycle power to the controller and re-attempt to run. If still no faults are displayed, replace relay board.
18. While holding the INSP UP/DOWN toggle switch in the UP position, does the 'DE' relay pick? ('P' and 'PS' relays on MG jobs)
    - Refer to line 49 of the wiring diagrams. Check for 110 VAC from TP12 to ground. If no voltage is present, replace the 'SR' relay.
19. While holding the INSP UP/DOWN toggle switch in the UP position, does the 'M' contactor pick? (Not applicable on MG)
    - Drive not enabling. Check for proper drive signals at sheet 7 for SCR, sheet 8 for AC.
    - Check for fault on drive. Refer to high speed adjustment information for each motor drive system for a detailed explanation of faults.
20. While holding the INSP UP/DOWN toggle switch in the UP position, do the 'BK' and 'BK1' relays pick?
    - Refer to line 49 of the wiring diagrams. Check for 110 VAC from TP13 to ground. If no voltage is present, replace the 'B' relay.
    - Refer to line 49 of the wiring diagrams. Check for 110 VAC from terminals A1 on the 'BK' and 'BK1' coils to ground. If no voltage is present, check the 'M' auxiliary contact. ('P' and 'PS' relays on MG jobs)

21. Does the brake lift?
    - Check brake regulator (sheet 6 on SCR and MG, Sheet 7 on AC) for proper incoming AC voltage.
22. Does the BKR input on the monitor change state after the brake lifts?
    - Check brake released contact, line 54 of the wiring diagrams.
23. Does the car start to move?
    - Check the speed reference signal to drive. Monitor voltage at J1 (MG applications) or display the speed reference signal on the AC or DC drive. If no signal is present, replace relay board. If signal is present, refer to high speed adjustment for each motor drive system for a detailed explanation of faults.

The car is running on inspection.

High Speed Sequence of Operations

The following information assumes that the car is capable of running on inspection operation. If you are not sure if the car runs on inspection, review the preceding topic.

When monitoring the display card, it is important to note that some of the inputs on the screen are purposely done in reverse video for safety reasons. Some of these signals are; the SAF (safety circuit verification), INSP (inspection operation), REG (Regulator/ Drive Trip), MGS (MG start), LIM (Limit Board Trip). It is important to note the following about these inputs:

- When the SAF input is lighted, the safety string is open.
- When the DCL input is lighted, the doors are fully closed.
- When the DOL input is lighted, the doors are fully open.
- When the INSP input is lighted, the car is on inspection.
- When the LIM input is lighted, the limit board is tripped.
- When the REG input is lighted, the Motor Drive system is faulted.

Note

Inputs DCL, DOL, and EE can be seen reversed by the processor. There are parameters that allow you to change the polarity of the input, either normally open or normally closed. Refer to the parameter explanations in Chapter 10 for more details.

MG Jobs Only

- When the MGSH input is lighted, the MG switch is off.
- When the GIN input is lighted, the generator has transferred to the delta, or run mode.

1. Check the fault log on the controller.
   - Any faults which are causing the car not to run? If in doubt, reset MPU and see if car runs.
2. Are the PRV and PWA inputs both on?
   - If not, refer to wiring diagrams and troubleshoot Relay Board signals so both inputs are on.
3. Run the car on inspection using the UP/DOWN toggle switch on the relay board. Does BKR input on monitor change state when the brake lifts?
   - Check brake released contact, line 54 of the wiring diagrams.
4. Does the encoder present value on the monitor increase as the car runs up and decrease as the car runs down?
   - Faulty encoder or stick assembly.
5. Does the actual car speed as shown on the monitor agree with the observed speed of the hoist motor?
   - Faulty encoder sensor(s).
6. Does the DZ relay pick when passing a door zone?
   - Faulty encoder sensor.
   - Faulty encoder board.
   - Missing door zone magnets.

7. Does the DZ input on the monitor turn on when the DZ relay picks?
   - Replace relay board.
8. Is the DCL input on the monitor turned on?
   - DCL input signal not functioning correctly.
   - Faulty DCL input opto-isolator.
9. Is the DOL input on the monitor turned off?
   - DOL input signal not functioning correctly.
10. Is the CG input on the monitor turned on?
   - If the “Gate” LED on the relay board is illuminated, replace relay board.
11. Is the DG input on the monitor turned on?
   - If the “Locks” LED on the relay board is illuminated, replace relay board.
12. Is the SAF input on the monitor turned off?
   - If “Safety” LED on the relay board is illuminated, replace relay board.
13. Is the REG input on the monitor turned off?
   - If the “Drive OK” LED on the relay board is illuminated, replace relay board.
14. Stop the car in a door zone at any floor. Turn the inspection switch to the up, or NORM position. Does the INS input on the monitor turn off?
   - If “Auto” LED on the relay board is illuminated, replace relay board.
   - If “Auto” LED on the relay board is not illuminated, check inspection circuitry, line 52 of wiring diagrams. Also check “Door Lock Bypass” and “Car Door Bypass” circuitry, line 59 of the wiring diagrams.
15. Does APW output on the monitor turn on?
   - Reset MPU and retry.
   - If APW still does not turn on, run the car to another door zone and retry. If APW again does not turn on, improperly programmed parameter values. Check all parameters and adjust as necessary.
16. Does the M contactor pick?
   - Check drive or regulator interface. Make sure ‘DE’ (SCR and AC drives) is enabling drive.
17. Does the PWA input turn off?
   - Refer to the wiring diagrams and check the M contactor to ensure that it is energizing and the contact is breaking.
18. Does UP or DWN output on the monitor turn on?
   - Improperly programmed parameter values. Check all parameters and adjust as necessary.
19. Does RBK output turn on?
   - Improperly programmed parameter values. Check all parameters and adjust as necessary.
20. Do the ‘BK’ and ‘BK1’ relays pick?
   - Check the ‘BK’ and ‘BK1’ relay circuitry, line 49 of the wiring diagrams.

21. Does the brake lift?
    - Faulty “Pick” output or bad brake driver.
22. Does the car start to move toward the floor?
    - Improper speed reference signal.
    - Check display card for desired demand and confirm speed reference at drive. If the command is not present at J1 or on drive, replace relay board. If present, troubleshoot motor control system.
    - If speed demand not present, then improperly programmed parameter values. Check all parameters and adjust as necessary.
23. After car gets to floor, UP or DN, RBK, and APW turn off?
    - Improperly programmed parameter values. Check all parameters and adjust as necessary.
24. Does BKR change state and PWA go high on the monitor within 5 seconds?
    - Replace relay board.
25. Using the keypad, place a car call. Does it remain latched?
    - Improperly programmed parameter values. Check all parameters and adjust as necessary.
    - Fatal error detected by MPU. Check fault log. Reset MPU to clear.
26. Does the car accelerate to the desired speed, initiate deceleration and leveling with the actual speed closely matching the desired speed?
    - Car speed parameters not set correctly. Check all parameters and adjust as necessary.
    - Drive problem. Check speed reference signal to drive and confirm it agrees with desired speed as shown on the monitor.
27. Does car level into floor and stop level?
    - Encoder counts not correct.
    - Erroneous floor landing values. Perform learn trip.
    - Faulty encoder or encoder sensor.
28. Place car call. While car is in motion, turn Door Disable Switch to the enable (Up) position. Does the OXP output turn on when it arrives at the floor?
    - Improperly programmed parameter values. Check all parameters and adjust as necessary.
    - Improper DOL and/or DCL signal. Check door limits.
29. Do the doors open?
    - Faulty door operator.
    - Faulty OXP output.
30. Do CG, DG, and DCL inputs on the monitor turn off when the doors open?
    - Faulty door system.
    - Jumper on door locks and/or gate switch.
    - Faulty door close limit.
31. Does DOL input turn on when doors are fully open?
    - Faulty door open limit.
    - Faulty DOL input opto-isolator.

32. Does CXP output turn on after several seconds?
    - EE input turned on. Check electric eye signal.
    - SE input turned on. Check safe edge signal.
    - Improperly programmed parameter values. Check all parameters and adjust as necessary.
33. Return the car to service.

Quick Topics

- In This Section
- Dispatching Screen
- Menu 1
- Menu 2
- Menu 3
- Menu 4
- Menu 5
- Menu 6
- Lock Screen
- Security Access
- Change / Disable Password
- Emergency Power

Dispatching

In This Section

This section describes the dispatching/group control aspects of IntellaNet, multi-car group installations:

- Dispatching Screen: Normal running display of system activity.
- Input/Output Descriptions: Definitions of activity displays.
- Menu 1: Peak operating modes. Fire code selection.
- Menu 2: Car recall definitions.
- Menu 3: Performance mode by time. Cross Registration settings.
- Menu 4: Parking configurations.
- Menu 5: Dynamic parking selection and status.
- Menu 6: Emergency power.
- Lock Screen: Soft floor lockouts.
- Security Access: Secured floor codes.
- Change/Disable Password: Password protection for parameter changes.
- Emergency Power: Descriptions of emergency power configurations.

Danger

Elevator control products must be installed by experienced field personnel. This manual does not address code requirements. The field personnel must know all the rules and regulations pertaining to the safe installation and running of elevators.

Dispatching Screen

During normal operation, a diagnostics/status screen is displayed. This screen lets you easily check active dispatcher inputs and outputs and alerts you when events or faults occur.

```
1   15:49:48   01/03/05   Wednesday
2                    266 Park Avenue
3   BU   1U   2U   3U   4U   5U   6U   7U
4   8U   9U  10U  11U   1D   2D   3D   4D
5   5D   6D   7D   8D   9D  10D  11D  12D
6                                      SASW
7   HBF REC AREC BREC CRED  FBY  EMG AUTO
8   NPWR HP   EC  PTS  EP1  EP2  EP3  EP4
9
10
11        9   10   11   12
12  DSP  3U        6D   4D
13  STA NOR  MLF  NOR  NOR
14  CAR  1U       12D   8D
```

- Line 1: Time and date.
- Line 2: Building name or address.
- Line 3: First group of hall calls to the dispatcher. As on the car diagnostic screen, the cursor can be moved (* or # key), placed next to a hall call, and “0” held down to register that call. When registered, a call will be highlighted or shown in reverse video. In the example above, the 3rd floor up, 4th floor down, and the 6th floor down hall calls are registered.
- Line 6: First group of inputs connected to the dispatcher. The only one used in this example is the last one, SASW. The input is turned off so it is not highlighted.
- Lines 7 and 8: Remaining inputs to the dispatcher. The HBF, or hall button failure input is highlighted because it is on. If this input were off, it would indicate to the dispatcher that there is no power to the hall call push buttons. This would cause the dispatcher to tell the cars to run continuously and stop at every other floor in the down direction to provide service to the building until power could be restored to the hall call push buttons.
- Lines 9 and 10: Blank. Additional inputs or outputs would be shown if more were required based on the job configuration.
- Line 11: Car numbers for the group. In this group there are four cars, numbered 9, 10, 11, and 12.
- Line 12: Dispatcher demands to each car in the group. Note that Car 9 is assigned a third floor up hall call, Car 11 is assigned a 6th floor down hall call, and Car 12 is assigned a fourth floor down hall call.
- Line 13: Status of group cars. Cars 9, 11, and 12 show a status of NOR. This indicates that they are on normal operation. Car 10 shows a status of MLF. This indicates that the car is malfunctioning and the dispatcher cannot communicate with it. Other status messages are listed in the following table.
- Line 14: Present car position and direction of travel.

Table 12.1 Screen Status Messages

Message	Definition
ATT	Car is on Attendant operation.
BYP	Hall call bypass operation. Usually triggered by the load weight or WTB input.
CMR	Car is on Emergency Medical operation.
EMG	Car is on Emergency Power operation.
FIR	Car is on Fire Service operation.
FLT	The car has faulted. The Dispatcher will not give the car any assignments until it leaves the floor. Check the car event log for the cause.
HBF	Hall Button Failure operation. Dispatcher HBF input is off. Car will run continuously and stop at every other floor in the down direction.
IND	Car is on Independent Service operation.
INI	Initialization operation. Generally seen after controller power up until car is ready to run.
INS	Car is on Inspection operation.
MLF	Malfunction. The Dispatcher cannot communicate with the car.
NOR	Normal operation. Car in service and capable of accepting Dispatcher assignments.
OGR	Out of group.
OSV	Out of service.
REC	Fire Recall (Phase I) operation.
RSY	Re-synchronization. The car needs to do or is presently doing a re-synchronization.
SAF	Safety circuit open.
SES	The car is on Seismic operation.
WTD	The car is on Weight Dispatch operation.

Car-Dispatcher Communication / Hall Button Failure

If the communication link fails between the car and dispatcher, car status will be shown as malfunction (MLF). If the car is on normal operation and capable of running, it will register its highest unlocked car call. After arriving at the top floor, it will enter all odd car calls and stop at the floors in the down direction. It will then go back to the highest floor and register all even car calls and stop at these floors in the down direction. This 'block operation' will maintain service to hall calls. When the communication link is restored, the car will be placed back on normal (NOR) status.

If the HBF input to the dispatcher goes off, it indicates a loss of power to hall call push buttons. The cars will be sent the HBF status by the dispatcher and will operate the same as a loss of dispatcher communication.

If any hall call cannot be answered by the cars in the group that are currently in service and not showing an FLT status, that hall call will be canceled. This is done to alert passengers that their hall call request will not be answered in a timely fashion.

Dispatcher Inputs

Inputs to elevator equipment are monitored. When an input is active, it will be highlighted on the status display screen in the elevator or dispatcher to make an observer aware of the activity. Because it may be desirable to allow a low/ground voltage condition, rather than the default high voltage signal condition at a particular input to represent the active state, parameter entry screens allow the “polarity” of some inputs to be selected by the user (normally open or normally closed).

Most inputs are non-latching. They are active while the condition exists or time out after a few seconds. Some inputs are latching.

Standard inputs to the IntellaNet dispatcher include:

- AREC: One of three fire recall inputs (AREC/BREC/CREC) used to connect smoke or other fire detection equipment. For each input (A, B, or C), different recall floors may be programmed, accommodating various recall scenarios.
- AUTO: When active, enables automatic emergency power response operation by the dispatcher when commercial power is lost. When off, automatic emergency power operation is prevented.
- BREC: See AREC.
- CREC: See AREC.
- nD: Input for front opening, down hall call at specified floor. In jobs with front and rear openings, down hall call front input activity will be displayed as nDF.
- nDR: Input for rear opening, down hall call at specified floor.
- EB1 - EB10: Emergency Bus inputs. In installations where multiple groups share emergency power sources or where emergency power sources are shared between groups, these inputs (and associated outputs BR1 - BR10) allow the system to equitably “share” access to limited power.
  Each “bus” represents enough power to run one car. When setting up emergency power parameters, the assignments and selections you make are used by the dispatcher(s) to determine emergency power capacity and the usage priorities you want applied. Please refer to “Emergency Power Bus Selection” on page 12-33 for more information.
- EC: Energy Conservation. When active, this input directs the dispatcher to run all cars in the group according to their Energy Conservation speed curve. This curve is generally used during off-peak traffic hours when conserving power may be more desirable than achieving minimum floor-to-floor times.
- EMG: Emergency Power input. When active (input polarity is user-selectable), informs the dispatcher that it is operating on emergency power. Depending on the sophistication of the emergency power system, this input may be automatically activated by external power equipment or may be a mechanical switch set by a human after emergency power has been applied to the system. When this input is active, the group will begin the emergency power sequence.
- EMGA: Emergency Power input A. When emergency power is provided to cars in the group by two sources (usually generators), the EMG input described above is “separated” into two inputs; one for each generator. While setting emergency power parameters, you choose which feeder/generator source provides power to which group cars. If EMGA (or EMGB) becomes active, the dispatcher will begin the emergency power sequence for the affected cars while allowing unaffected cars to continue to run on normal power.

- EMGB: See EMGA.
- EP1 - EP10: Emergency Power (manual) car selection inputs. When the AUTO input is inactive (automatic response to emergency power conditions by the dispatcher disabled), these inputs allow you to manually select a car to put into emergency power operation phase 1 or phase 2. To manually select a car on emergency power phase 1, the MRET input must be active.
- FBY: Fire Bypass input. In some jurisdictions, code allows a “Bypass” position on the fire recall switch. The three positions of the switch will be Bypass, Off, and On. Setting the three-position recall switch to Bypass will cause normal elevator service to be restored regardless of the status of the smoke detector inputs AREC, BREC, and CREC. Setting the switch to the Off position will allow normal elevator service when all Phase I switches are in the off position. Setting the switch to the On position will cause fire operation Phase I from the main recall switch by triggering the REC input. In jurisdictions where a Bypass position on the fire recall switch is not required, this input is left unconnected. Setting the recall switch to On places the cars in fire service from the main recall switch by triggering the REC input. Setting the switch to Off will allow normal elevator operation when all Phase I switches are in the off position. Please refer to “Parameter Menu 1” on page 12-13 for more information.
- FRST: Fire Reset switch (ANSI/ASME 2000 Code only). In jurisdictions which adopted the ANSI/ASME 2000 code, the fire recall switch has three positions, Reset, Off, and On. Setting the switch in the On position will cause fire operation Phase I from the main recall switch by triggering the REC or RECA input, if two fire recall switches are present. If the switch is in the Reset position, it allows the cars to return to normal service iff all fire alarm initiating devices are off (REC, RECA, AREC, BREC, CREC are not active. If any detector input is still on, the cars will remain in fire service. Once all alarm initiating devices are not active, the switch can be turned from the Reset to the Off position to allow normal operation to resume.
- HBF: Hall Button Failure. The dispatcher monitors hall call bus power. If power is lost, typically caused by an opened fuse, this input will be activated and HBF highlighted on the status display. To preserve service under these conditions, cars will run continuously, automatically servicing alternate floors in the down direction and lobby and top landings in both directions. (Odd and even numbered floors are alternated in the down direction; lobby and top floors are serviced in both directions. Sometimes called “wild” service.)
- 1HL - nHL: Hall call locked. Active when a front hall call is locked on the specified floor.
- 1HR = nHR: Rear hall call locked. Active when a rear hall call is locked on the specified floor.
- HLK: When active, indicates that a group is servicing an alternate riser in the case when both the main and the alternate riser are controlled via a single dispatcher.
- HLOF: When active, HL and HR hall call locks are overridden. Usually connected to a keyed switch in a security lobby panel.
- HP: High Performance. When active, this input directs the dispatcher to run all cars in the group according to their High Performance speed curve. This curve is generally used during peak traffic hours when conserving power may be less important than achieving minimum floor-to-floor times.
- 1IDF - nIDF: Inconspicuous Riser Down Front Hall Call input. (Also called the Alternate or Swing riser.)

- 1IDR - nIDR: Inconspicuous Riser Down Rear Hall Call input. (Also called the Alternate or Swing riser.)
- 1IUF - nIUF: Inconspicuous Riser Up Front Hall call input. (Also called the Alternate riser.)
- 1IUR - nIUR: Inconspicuous Riser Up Rear Hall call input. (Also called the Alternate riser.)
- LKON: Lock On. When active, all non-lobby car calls are locked out on all group cars. Usually connected to a keyed switch in the lobby security panel.
- LKOF: Lock Off. When active, all car call locks imposed by timers, or a monitoring system, or the LKON input are overridden. Usually connected to a keyed switch in the lobby security panel.
- 1M (or 1MF) - nM (or nMF): Medical emergency, Code Blue, front hall call active at the specified floor. (The “F” is appended if the installation has both front and rear hall calls.)
- 1MR - nMR: Medical emergency rear hall call active at the specified floor.
- MRET: Manual Return. Manually initiates emergency power recall sequence.
- NPWR: Normal Power. When activated, informs the dispatcher that normal commercial power has been applied to the system following a period of operating on emergency power sources. Depending on the sophistication of the emergency power system, this input may be automatically activated by external power equipment or may be a mechanical switch set by a human after commercial power has been restored to the system. When no PTS input is present on the dispatcher, the NPWR input can be used to perform the function of the PTS input as well as its normal function.
- OFFL: Off Lobby. For Canadian installations only, indicates that the lobby fire recall switch has been set to off.
- OFFR: Off Remote. For Canadian installations only, indicates that the remote fire recall switch has been set to off.
- PH2E: Phase 2 Emergency power operation enabled. When active, indicates that Phase 2 of the emergency power sequence is active. In Phase 2, selected cars are allowed to run to provide limited passenger service according to the priorities established by the user and the capacity of the emergency power source.
- PTS: Pre Transfer Switch. Indicates that the pre transfer switch input has been activated. When activated, this input causes the group to direct a normal stop at the next available floor in the direction of travel for all cars. Cars are held at the floor until either normal commercial power is restored and normal operation can begin, or until emergency power is made available. Also used for testing the transfer from normal commercial power to emergency generator power.
- REC: (Main Fire) Recall switch input. When active, initiates fire Phase I recall to (usually) the lobby floor.
- RECA: Recall switch input. When active, initiates fire Phase I recall to (usually) the lobby floor. ANSI/ASME 2000 Code only.
- RECL: Recall Lobby. For Canadian installations only, initiates Phase I fire recall to (usually) the lobby floor. This is a latching input, reset using the OFFL input described earlier.
- RECR: Recall Remote. For Canadian installations only, initiates Phase I fire recall to (usually) the lobby floor. This is a latching input, reset using the OFFR input described earlier.

- RET1: Return (emergency power recall, Phase 1 completed) input. Each simplex or group dispatcher has both a RET1 input and a RET1 output. An active input informs the dispatcher or simplex that the dispatcher preceding it in emergency power recall order has completed recalling its cars and, if it has not already done so, it may begin its recall sequence. The group designated the Master initiates recall first (and is informed by its RET1 input that the last group has completed recall).

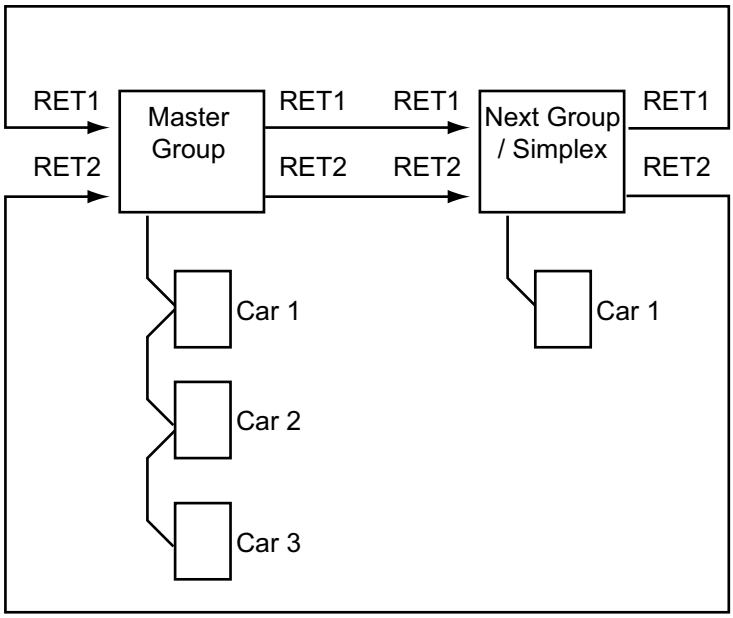

- RET2: Return (emergency power recall, Phase 2 completed) input. Please refer to “Multiple Dispatchers Linked for Emergency Power” on page 12-31 for more information.
- RETA: Return (emergency power recall, Phase 1, enabled) input. For groups using two feeder power sources or if two feeder power sources are used for different cars within a group, informs the dispatcher or simplex that it may begin emergency power recall for cars powered by feeder (generator) A.
- RETB: Return (emergency power recall, Phase 1, enabled) input. For groups using two feeder power sources or if two feeder power sources are used for different cars within a group, informs the dispatcher or simplex that it may begin emergency power recall for cars powered by feeder (generator) B.

Note

Please refer to “Multiple Dispatchers Linked for Emergency Power” on page 12-31 for more information about emergency power operation.

- SASW: Seismic Activity Switch. When active, informs the dispatcher that seismic activity has been detected. Once triggered, the seismic switch remains on until a reset switch is activated. When SASW is enabled, the dispatcher will send the seismic hall direction to the car.
- SEC: Security. When active, indicates that the optional security access code feature is active on this dispatcher.
- 1U (1UF) - nU (nUF): Front up hall call for specified floor. (nUF is displayed if the installation also has rear openings.)
- 1UR - nUR: Rear up hall call for specified floor.

Dispatcher Outputs

Outputs from elevator equipment are monitored. When an output is active, it will be highlighted on the status display screen in the elevator or dispatcher to make an observer aware of the activity.

Most outputs are non-latching. They are active while the condition exists or time out after a few seconds. Some outputs are latching.

Dispatcher outputs include:

- BR1 - BR10: Emergency Bus outputs. In installations where multiple groups share emergency power sources or where emergency power sources are shared between groups, these outputs (and associated inputs EB1 - EB10) allow the system to equitably “share” access to limited power.
  Each “bus” represents enough power to run one car. When setting up emergency power parameters, the assignments and selections you make are used by the dispatcher(s) to determine emergency power capacity and the usage priorities you want applied. Please refer to “Emergency Power Bus Selection” on page 12-33 for more information.
- 1DA - nDA: Down annunciator front light output for the specified floor.

Note

Cross Registration and Cross Cancellation: When a multiple elevator modernization is in progress, it sometimes happens that a new dispatcher controlling some number of cars must coordinate traffic service with an existing (legacy) controller remaining in control of some number of cars.
Cross Registration allows the new dispatcher to place hall call demands on an existing microprocessor-based controller. Cross Cancellation allows the new dispatcher to cancel hall call demands on an existing relay-based controller.

- 1DC - nDC: Down Cross Cancellation Front. Used to cancel down front hall calls on the legacy controller at the specified floor. The duration of the output is user-programmable in 0.1 second increments to meet the needs of the specific legacy controller. Please refer to “Parameter Menu 3” on page 12-18 for more information.
- DF: Dispatcher Failure. Used to light an indicator and/or sound an alarm to alert observers in the event of a dispatcher to car serial communication failure. Enabled, for example, by removing the two-wire LON communication between the car and the dispatcher.

- DNP: Down Peak light. Used to light an indicator and/or sound an alarm to alert observers when down peak service mode is active. Selection is based on time and up and down hall call imbalance parameters on Parameter Menu 1.
- 1DW - nDW: Down Cross Registration Front. Used to place a hall call demand on a legacy controller at the specified floor. The duration of the output is user-programmable in 0.1 second increments to meet the needs of the specific legacy controller. Please refer to "Parameter Menu 3" on page 12-18 for more information.
- 1DX - nDX: Down Cross Cancellation Rear. Used to cancel down rear hall calls on the legacy controller at the specified floor. The duration of the output is user-programmable in 0.1 second increments to meet the needs of the specific legacy controller. Please refer to "Parameter Menu 3" on page 12-18 for more information.
- 1DY - nDY: Down annunciator rear light output for the specified floor.
- 1DZ - nDZ: Down Cross Registration Rear. Used to place a hall call demand on a legacy controller at the specified floor. The duration of the output is user-programmable in 0.1 second increments to meet the needs of the specific legacy controller. Please refer to "Parameter Menu 3" on page 12-18 for more information.
- EML: Emergency Power Light. Used to light an indicator and/or sound an alarm to alert observers when the dispatcher is operating on emergency power.
- EMLn: Emergency Power Light. Used to light an indicator to alert observers when a particular car in the group ("n") is operating on emergency power. Indications for these outputs are:
  - Not on emergency power: Light off.
  - On emergency power but halted: Light flashing.
  - Car returns to recall floor on manual emergency power Phase 1: Light flashing.
  - Car returns to recall floor on automatic emergency power Phase 1: Light on.
  - Car finishes emergency power Phase 1 return and is shut down: Light off.
  - Car is manually selected on emergency power Phase 2: Light on.
  - Car is automatically selected on emergency power Phase 2: Light off.
  - Car returns to emergency power recall floor after being taken off Phase 2: Light on. (MRET should be off at this time. If MRET is on, the EMLn light will flash.)
- EMPA: Emergency Power A. Used to light an indicator and/or sound an alarm to alert observers when the dispatcher and/or designated cars are operating on emergency power provided by emergency power feeder A.
- EMPB: Emergency Power B. Used to light an indicator and/or sound an alarm to alert observers when the dispatcher and/or designated cars are operating on emergency power provided by emergency power feeder B.
- FIR: Fire Phase I Recall. Used to light an indicator and/or sound an alarm when Fire Phase I recall is in progress. ANSI/ASME 2000 Code only.
- HF: Hall Button Fail. Used to light an indicator and/or sound an alarm to alert observers in the event of a dispatcher hall call bus failure. Enabled by activation of the HBF input.
- LAUT: Lamp Auto. Used to light an indicator and/or sound an alarm when Fire Phase 1 recall is automatically activated by a smoke/fire detector input. Only required in certain Canadian jurisdictions.

- LMAN: Lamp Manual. Used to light an indicator and/or sound an alarm when Fire Phase 1 recall is manually activated using a fire recall switch. Only required in certain Canadian jurisdictions.
- OP: Off Peak. Used to light an indicator and/or sound an alarm when the dispatcher dynamically selects Off Peak mode operation. Selection is based on time and up and down hall call imbalance parameters on Parameter Menu 1.
- RET1: Return (emergency power recall, Phase 1 completed) output. Each simplex or group dispatcher has both a RET1 input and a RET1 output. An active input informs the dispatcher or simplex that the dispatcher preceding it in emergency power recall order has completed recalling its cars and, if it has not already done so, it may begin its recall sequence. The group designated the Master initiates recall first (and is informed by its RET1 input that the last group has completed recall).

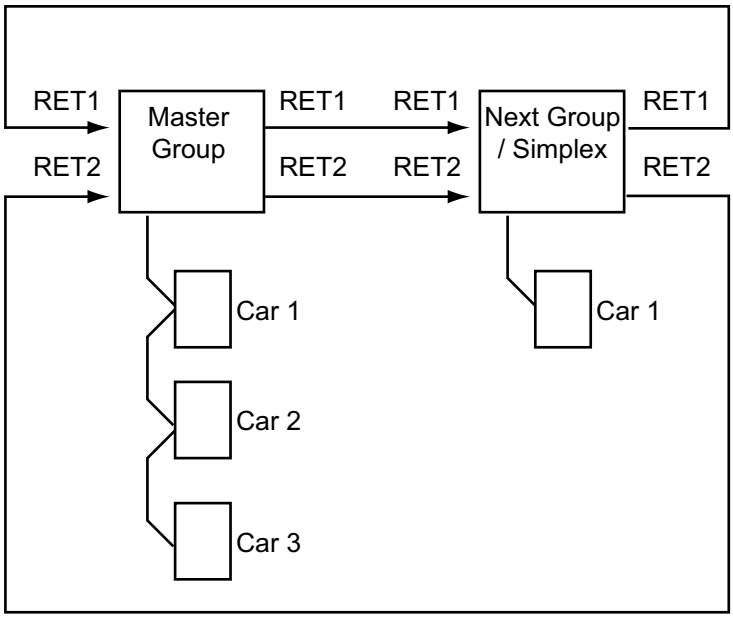

- RET2: Return (emergency power recall, Phase 2 completed) output. Please refer to “Multiple Dispatchers Linked for Emergency Power” on page 12-31.
- RTDA: Return (emergency power recall for feeder source A complete) output. For groups using two feeder power sources or if two feeder power sources are used for different cars within a group, informs the next dispatcher or simplex in the recall sequence that it may begin emergency power recall for cars powered by feeder (generator) A. Similar to the function of RET2.
- RTDB: Return (emergency power recall for feeder source B complete) output. For groups using two feeder power sources or if two feeder power sources are used for different cars within a group, informs the next dispatcher or simplex in the recall sequence that it may begin emergency power recall for cars powered by feeder (generator) B. Similar to the function of RET2.
- 1UA - nUA: Up annunciator front light output for the specified floor.
- 1UC - nUC: Up Cross Cancellation Front. Used to cancel up front hall calls on the legacy controller at the specified floor. The duration of the output is user-programmable in 0.1 second increments to meet the needs of the specific legacy controller. Please refer to “Parameter Menu 3” on page 12-18 for more information.

- UPP: Up Peak. Used to light an indicator and/or sound an alarm when the dispatcher dynamically selects Up Peak mode operation. Selection is based on time and up and down hall call imbalance parameters on Parameter Menu 1 and on the number of registered car calls when the car is at the lobby.
- 1UW - nUW: Up Cross Registration Front. Used to place an up hall call demand on a legacy controller at the specified floor. The duration of the output is user-programmable in 0.1 second increments to meet the needs of the specific legacy controller. Please refer to "Parameter Menu 3" on page 12-18 for more information.
- 1UX - nUX: Up Cross Cancellation Rear. Used to cancel up rear hall calls on the legacy controller at the specified floor. The duration of the output is user-programmable in 0.1 second increments to meet the needs of the specific legacy controller. Please refer to "Parameter Menu 3" on page 12-18 for more information.
- 1UY - nUY: Up annunciator rear light output for the specified floor.
- 1UZ - nUZ: Up Cross Registration Rear. Used to place a down hall call demand on a legacy controller at the specified floor. The duration of the output is user-programmable in 0.1 second increments to meet the needs of the specific legacy controller. Please refer to "Parameter Menu 3" on page 12-18 for more information.

Accessing Dispatcher Parameter Screens

Access the dispatcher main menu by moving the cursor to the top right corner of the diagnostics/status screen and pressing the “0” button on the display board keypad.

```
Main Menu:
     - Return to Dispatcher Screen
     - Edit Parameters
     - Change / Disable Password
     - Write Parameters to EEPROM
```

The bottom three buttons on the dispatch keypad are used to move the cursor around the screen and change parameters.

- To move the cursor to the left, press the “?” key.
- To move the cursor to the right, press the “#” key.
- The “0” is used as an enter key, a toggle key, and as a numeric key when entering a numeric parameter.

To select a menu function, move the cursor down to the desired selection, then press “0.”

- Return to Dispatcher Screen: Causes the dispatcher diagnostics/status screen to be displayed.
- Edit parameters: Provides access to dispatcher parameter screens.
- Change / Disable Password: Accesses a screen on which you can change your password or disable password protection.
- Write Parameters to EEPROM: After making changes to parameters, you must return to this screen and select this function to save your changes to permanent memory. If you exit this screen without having selected Write Parameters to EEPROM, your changes will be lost.

Parameter Menu 1

```
Parameter Menu 1:
   Long Wait Priority (seconds):          ___
   Peak Duration Time (seconds):          ___
            Start  End            Start   End
   Up Pk 1 __:__  __:__   Up Pk 2 __:__  __:__
   Up Pk 3 __:__  __:__   Up Pk 4 __:__  __:__
   Up Pk 5 __:__  __:__   Up Pk 6 __:__  __:__
   Dn Pk 1 __:__  __:__   Dn Pk 2 __:__  __:__
   Hall Call Imbalance Up Peak:            __
   Hall Call Imbalance Dn Peak:            __
   Stall Timeout:                         ___

   Fire Code: CANADA, USA/SOUTH AFRICA, AUSTRALIA,
   NEW ZEALAND, USA A17.1A-2005 OR LATER
   Fire / Emergency Power Recall Floors:
   Main:__   Det. A:__   Det. B:__   Det. C:__
   FBY operation: (Not shown for ANSI 2000 Car)
     FBY Disabled (AREC - CREC not latched)
     FBY Enabled (AREC - CREC latched)
   AREC/BREC/CREC Inputs Normally Open:    Y N
```

- Long Wait Priority:
  When a call has been registered for longer than this setting, the dispatcher assigns it high priority. Typically, this is set to about twice the average wait time for a hall call. In systems using cross registration, this setting also determines how long the dispatcher will wait for a call assigned to a legacy car to be answered before re-assigning that call to an IntellaNet-dispatched car. Minimum: 45. Maximum: 999. Default: 120.

Note

Cross Registration: During extended modernization projects, an elevator group may have new IntellaNet cars and legacy cars operating together. Cross registration allows the IntellaNet dispatcher to assign calls to legacy cars.

- Peak Duration Time:
  Sets the delay time the system will observe before dropping a dynamically selected peak due to changing building traffic conditions. This delay helps to avoid volatility across operating mode assignments due to temporary fluctuations in hall call numbers. The default value is 30 seconds with an assignment range of 1 to 999 seconds.
- Up Pk and Dn Pk (manual assignments)
  As many as six up- and two down-peak operating periods can be manually assigned across each 24-hour day. Enter time in 24-hour/military format (0 - 23 hour, 0 - 59 minutes).
- Hall Call Imbalance Up Peak:
  The difference between the number of active up and down calls that will trigger dynamically-assigned up peak operation. Default value is 8. Assignment range is 0 to 30.

- Hall Call Imbalance Down Peak:
  The difference between the number of active up and down calls that will trigger dynamically-assigned down peak operation. The default value is 8 with an assignment range of 0 to 30.

Note

If an up and down peak are manually set to occur at the same time, the down peak will take precedence. If an imbalance of calls occurs sufficient to cause dynamically assigned peak operation, dynamic assignment will take precedence over manual assignment. If dynamic assignment overrides a manually assigned peak, the system will return to the currently active manual assignment when the traffic imbalance subsides.

- Stall Timeout:
  Determines the number of seconds the system will wait before placing the car into a temporary fault state (FLT) when the floor the car is on is the same as its hall call assignment and the car is stuck or cannot open the door. While the car is in the fault state, the hall call will be reassigned. The default value is 15 seconds.
- Fire Code:
  Sets fire code observation to appropriate area. Selections include Canada, USA/South Africa (USA before A17.1-2005), Australia, New Zealand, or USA A17.1A-2005 Or Later. “Canada” is automatically detected and selected.
- Fire / Emergency Power Recall Floors:
  Determines the main and alternate floors to which a fire or emergency (Phase 1) recall will return group cars. The lowest floor in the building is floor one. The Main floor setting determines the floor to which the cars will go when the Lobby recall or Emergency Power Phase I inputs are active. Det A, B, and C settings determine the floor to which the cars will go when the associated (AREC, BREC, CREC respectively) smoke detector inputs are activated.
- FBY Operation:
  For jobs conforming to 1996 or earlier National Fire Code, the FBY input will be present.
  - FBY Enabled (AREC - CREC Latched) will cause the cars to remain on Fire Recall after the AREC, BREC, or CREC inputs are reset. The Lobby key must be turned to “BYPASS” (FBY input) before the cars can be returned to service.
  - FBY Disabled (AREC - CREC Not Latched): For New York City and other locations where there is no “BYPASS” position on the Lobby key switch. The FBY input is still present, but the cars will be allowed to return to service when the AREC, BREC, or CREC inputs turn off.

Note

For jobs where the ANSI/ASME 2000 Code requires the FBY (Fire Bypass) input not be present, but be replaced by FRST (Fire Reset), FRST acts like the FBY input in that it will allow the cars to return to service if the AREC, BREC, or CREC inputs are off but, if any of them are on, the cars will remain on Fire Recall.

- AREC, BREC, CREC Inputs Normally Open?
  Allows the user to specify the (normal operation) state of the switches or relays connected at the A, B, and C Recall inputs (smoke detectors). Set to Yes if these inputs are normally open. Set to No if they are normally closed.

Parameter Menu 2

```
Parameter Menu 2:
   Penalties:
   Generator Off:___      This Car Up:     ___
   Next Car Up:  ___      Halted Time:     ___

   Advantages:
   In Line Call: ___      Call Coincidence:___

   Doors Open Simultaneously?              Y N
   Reopen Door With Hall Call?             Y N
   Bypass Hall Call Time Sec:              ___
   Car Fault Timeout (sec):                ___
   Door Time Med EM Recall Sec:            ___
   Med PH1 Overrides Fire PH1 if Trip 1st? Y N
   Return Ind Cars On Medical Recall?      Y N
   Return Att Cars on Medical Recall?      Y N
   Lockout Inputs Normally Open?           Y N
   Lockout Car Calls w/Hardware Hall Lock? Y N
   Drop Group Hall Calls For IR Cars?      Y N
   HLOF Input Normally Open?               Y N
   Lockout Car Calls With Alt Riser?       Y N
   Auto Car Call Locks By Time
   Mon to Fri  On __:__  Off__:__
   Sat Only    On __:__  Off__:__
   Sun Only    On __:__  Off__:__
```

- Penalties:
  When making dispatching decisions, penalties are time added to a cars estimated arrival time at a hall call to allow the dispatcher to compensate for conditions that will delay one car in comparison to others or to favor assignment of one car over another.
  - Generator Off: Penalty assigned to a car parked with its MG set. Set to “0” for SCR drive systems. In general, the more cars that are available to dispatch, the higher this penalty should be set (less need to turn on the generator in a car with its generator off). For generator systems, multiply the number of cars by two for a good starting point value. Valid entries range from 0 to 10 with a default setting of 5.
  - This Car Up: Penalty assigned to the lobby car when calculating the best car to assign to a call. Larger values will cause the lobby car to remain in the lobby and another car in the system to be assigned hall calls. Valid entries range from 0 to 5 with a default setting of 1.
  - Next Car Up: Penalty assigned to the next car up when calculating the best car to assign to a call. Valid entries range from 0 to 5 with a default setting of 2.
  - Halted Time: Penalty assigned to a car depending upon the amount of time required for it to halt (decelerate) and cycle its doors. Valid entries range from 1 to 30 with a default setting of 2. A car with a slow door operator should be assigned a comparatively longer penalty.

- Advantages:
  When making dispatching decisions, advantages are time subtracted from a cars estimated arrival time at a hall call to allow the dispatcher to favor assignment of one car over another.
  - In Line Calls: An advantage given to a car that will pass the active hall call in its present direction of travel. Valid entries range from 0 to 10 with a default setting of 5.
  - Call Coincidence: An advantage given to a car that has a car call at the floor for which the hall call is registered. Valid entries range from 0 to 10 with a default setting of 5.
- Doors Open Simultaneously?
  For cars on Automatic (passenger) Operation only, set to Yes to have both front and rear doors open together.

Note

Doors Open Simultaneously parameters on both dispatcher and car screens must be set to Yes to initiate simultaneous front and rear door opening.

- Reopen Door with Hall Call?
  If set to yes, pressing the hall call button will cause a closing door to reopen or to be held open if constant pressure is applied. The hall button will not hold the door beyond the Bypass Hall Call Time parameter unless the car has no car calls registered and no other hall assignments. This prevents a stuck hall call button from holding the car indefinitely. If set to no, the car will not reopen its doors if it has another hall assignment or car call registered. The default is no.
- Bypass Hall Call Time (sec):
  The number of seconds that the continuously pressed hall call button can be used to keep the car door open at a floor. (See Reopen Door with Hall Call parameter above.) After this amount of time, the hall button is considered stuck and the car will be released. The timer starts when the car first stops to answer the hall call. The timer increments only if the car has a hall assignment or car call at another floor. The range is 0 to 999 seconds with a default of 30 seconds.
- Car Fault Timeout (sec):
  Sets the amount of time that the car will be allowed to stand at a floor before the dispatcher puts it into FLT (fault) status and reassigns the hall call. The timer starts when the car arrives at the floor and the doors start to open. Setting the time too short will cause a car to go into fault mode too quickly for common problems like someone holding the doors. We recommend 30 seconds.
- Door Time Med EM Recall (sec):
  Sets the amount of time the door will remain open when the car is at the recall floor waiting to go on Phase II of Medical Emergency. When the timer expires, the car will close its door, go off Medical Phase I, and rejoin the group. (Phase II was not initiated before the set time expired.)
- Med PH 1 Overrides Fire PH 1 If Triggered 1st?
  If set to yes, a car on Medical Phase 1 Recall will not respond to a subsequent Fire Phase 1 Recall but will continue travelling to, or remain standing at, the medical recall floor even though a Fire Recall has been initiated. If set to no, the Fire Phase 1 Recall will override the Medical Phase 1 recall and the car will proceed to the appropriate fire recall floor.

- Return Ind Cars on Medical Recall?
  If set to yes, cars on Independent service will nevertheless be assigned to medical recall (code blue) calls. If set to no, cars on Independent service will be exempted from medical recall. In order to be effective, this parameter must be set to match the like parameter on the car parameter screen.
- Return Att Cars on Medical Recall?
  If set to yes, cars on Attendant service will nevertheless be assigned to medical recall (code blue) calls. If set to no, cars on Attendant service will be exempted from medical recall. In order to be effective, this parameter must be set to match the like parameter on the car parameter screen.
- Lockout Inputs Normally Open?
  Allows the user to specify the (normal operation) state of the switches connected at the hardware hall call lock inputs. Set to Yes if normally open. Set to No if normally closed.
- Lockout Car Calls w/Hardware Hall Lock?
  If set to yes, an active hardware hall lock input (see above parameter) will also lock out car calls for the associated floor.
  If set to yes, an active hardware hall lock input will affect only the hall call for the associated floor.
- Drop Group Hall Calls for IR Cars?
  If set to yes, a car running on inconspicuous riser (swing) will not be assigned group hall calls. If another group car is not available, the hall call will be dropped.
  If set to no, the group hall call will be latched, regardless of the availability of other cars. If the call is still active when the car on inconspicuous riser returns to group service, it may be assigned to answer the call.
- HLOF Input Normally Open?
  Allows the user to specify the (normal operation) state of the switches connected at the All Hall Call Locks Off (HLOF) input. Set to Yes if normally open. Set to No if normally closed.
- Lockout Car Calls with Alt Riser?
  If set to yes, and the dispatcher has an alternate riser, the dispatcher will lock out the car calls corresponding to hall calls that are not valid for the selected riser.
- Auto Car Call Locks By Time:
  All car calls (except for the lobby call) on all cars will lock and unlock automatically at these set times. Locks may be set for: Monday to Friday, Saturday Only, or Sunday Only. Enter times in 24-hour (military) format.

Parameter Menu 3

```
Parameter Menu 3:
   Energy Conserv Status Based On Time
   and Day:0=High Perform 1=Energy Conserv
   Time: ON    OFF  Status   S  M  T  W  T  F  S
       __:__  __:__   _      _  _  _  _  _  _  _
       __:__  __:__   _      _  _  _  _  _  _  _
       __:__  __:__   _      _  _  _  _  _  _  _
       __:__  __:__   _      _  _  _  _  _  _  _
   Hall Call Long Wait Time before
   Switching to High Perform.                ___
   Does This Dispatcher Have A Backup?       Y N
   Is This Dispatcher The Backup?            Y N
   Main Disp Failure Timeout (0.1 sec)       ___
   Cross Registration/Cancel Operation
      Not Enabled
   Cross Cancel Time (0.1 sec):   ON:___ OFF:___
   Cross Registration ETA (sec):             ___
   Cross Registration On Time (0.1 sec):      __
   Maximum Car Speed (fpm):                 ____
   If Cross Registration, Cars In Service On
   The Old Dispatcher: YN YN YN YN YN YN YN YN YN
```

- Energy Conserv Status Based On Time and Day:
  These timers allow you to set as many as four time periods a day during which the dispatcher will command High Performance or Energy Conservation speed curve assignment to group cars, as set. The default is 0=high performance. For the timers to be effective, the EC (Energy Conservation) and HP (High Performance) inputs must be off and the cars must be set for dynamic energy conservation. To use a timer:
  - Set On and Off times in 24-hour (military) format.
  - Set the desired performance curve (0=high performance, 1=energy conservation).
  - Select the days of the week during which this timer should be active by selecting a Y or an N under each day.
- Hall Call Long Wait Time Before Switching to High Perform:
  Set to the number of seconds a hall call may be registered before the dispatcher switches a car from energy conservation to high performance operation to respond to the call. Default is 120 seconds. Range is from 0 to 999 seconds.

Note

Hall Call Long Wait Time Before Switching to High Perform takes effect only if EC (Energy Conserve) and HP (High Performance) inputs are OFF, no manually set EC or HP timers are active, and cars are set to change curves dynamically (as demanded by the dispatcher).

- Does This Dispatcher Have a Backup?
  Set to Yes if this dispatcher is the primary dispatcher and there is a backup/redundant dispatcher for it.
  Set to No if there is no backup dispatcher for this dispatcher.
- Is This Dispatcher the Backup?
  Set to Yes if this dispatcher is the backup/redundant dispatcher for a primary dispatcher.
  Set to No if this dispatcher is not a backup/redundant dispatcher.

Note

The two preceding backup parameters enable the communicating inputs and outputs between primary and backup dispatchers so that they monitor and/or transmit over the expected paths when control is transferred from one to the other.

- Main Disp Failure Timeout (0.1 sec):
  Set to the amount of time the backup dispatcher should wait before taking over car dispatching after losing communication with the primary dispatcher. The default is 5.0 seconds (setting value 50). Range is from 20 (2 seconds) to 150 (15 seconds).
- Cross Registration/Cancel Operation:
  - Not Enabled: Cross Registration is not enabled. This dispatcher fully controls the cars it is communicating with.
  - Cross Registration Enabled: The dispatcher controls the cars it is communicating with in tandem with an existing solid-state controller. This option is available only if the cross-registration inputs are mapped on the dispatcher.
  - Cross Cancellation Enabled: The dispatcher controls the cars it is communicating with in tandem with an existing relay controller. This option is available only if the cross-registration inputs are not mapped on the dispatcher.
- Cross Cancel Time (0.1 sec):
  - ON: Controls the time on for the cross cancellation signal. Set in 1/10 second increments. Default is 10 (1 second). Range is 1 (1/10 second) to 20 (2 seconds).
  - OFF: Controls the time off for the cross cancellation signal. Set in 1/20 second increments. Default is 10 (1 second). Range is 1 (1/10 second) to 40 (4 seconds).
- Cross Registration ETA (sec):
  If Cross Registration is enabled, and the time it would take an IntellaNet car to respond to an active hall call exceeds this setting, the call will be assigned to the legacy controller. The default setting is 25 seconds. Range is from 0 to 240 seconds.
- Cross Registration On Time (0.1 sec):
  Sets the on time for the signal transferring a call from the IntellaNet dispatcher to a legacy controller in 1/10 second increments. Default is 15 (1.5 seconds). Range is 1 (1/10 second) to 40 (4 seconds).
- Maximum Car Speed (FPM):
  When Cross Registration is active, set to the contract speed of the legacy cars. IntellaNet uses this information in deciding whether or not to transfer a call to the legacy system. Minimum: 50. Maximum: 1200. Default 1200.
- If Cross Registration, Cars in Service On The Old Dispatcher:
  When Cross Registration is active, this parameter set tells IntellaNet which cars are in service on the old controller so that IntellaNet knows which calls to transfer to the legacy system. A “Y” indicates that the corresponding car is in service on the legacy system. Default setting is “N.”

Parameter Menu 4

```
Parameter Menu 4:
   Lobby Floor:                                 __
   Zoning Retardation (seconds):               ___
   Zone to Fully Locked Floors?               Y N
   Priority Park Flrs (0 NONE ZONE)
   Flr  Car  Time On: HR:MN  Off: HR:MN
   ___  ___       On: __:__  Off: __:__
   ___  ___       On: __:__  Off: __:__
   ___  ___       On: __:__  Off: __:__
   ___  ___       On: __:__  Off: __:__
   Groups for Lobby Coverage
   Group 1: _ _ _ _ _ _ _ _ _ _ _
   Group 2: _ _ _ _ _ _ _ _ _ _ _
   Cars Lby Off Pk: GP1: __ GP2: __
   Cars Lby Up Pk:  GP1: __ GP2: __
   Cars Lby Dn Pk:  GP1: __ GP2: __
   Door Open Time Lobby Up Sec:  __
   (99 Door Open All The Time)
   Door Open Time Lobby After Car Call:  __
   Modem Parameters:         Vol (0 - 3): _
   Ph#:              ID#:
   Init: ATZ0
```

- Lobby Floor:
  Sets the floor the dispatcher will consider to be the Lobby floor for dispatching and zoning.

Note

This floor does not have any effect on the Fire Recall Lobby floor. The floor the car will return to on Fire Recall operation is set on the first menu page of the dispatcher parameters.

- Zoning Retardation (seconds):
  Sets the amount of time (in seconds) that the dispatcher will wait to give a car a parking assignment. The larger the number, the longer the dispatcher will wait after the car becomes available. Setting the number too short will cause the car to start unnecessarily. Setting it too large will adversely affect service in the building. We recommend a value of 20 - 30 seconds to start.
- Zone to Fully Locked Floors?
  If set to No, the dispatcher will not give a car a parking assignment at a floor that has the car calls and its up and down hall calls locked out.

- Priority Park Flrs:
  This group of parameters sets up priority parking floors for the building. The assignments can be adjusted so that, at a prescribed time, a car will be assigned to park at the desired floor. Military time must be used to set the start and end times. If “0” is set for the floor, no priority parking will occur (lobby service and zoning will be unaffected). If the car is set to “0,” the first available car will park at the floor. If a specific car number is entered, only that car will park (if and when it becomes available). There are four priority parking floor slots available.

Note

Lobby parking assignments have priority over “Priority Parking” assignments. The “Priority Parking” assignments have priority over zoning assignments. DO NOT ENABLE THIS FEATURE UNLESS ABSOLUTELY NECESSARY, AS IT WILL ADVERSELYEFFECT SERVICE TO OTHER FLOORS.

- Groups For Lobby Coverage:
  This group of parameters is used to assign different cars for Lobby Parking. You can split the group into two different groups for lobby coverage. If the group is split, you can have two “This Car Up” cars. This is useful if you wish a specific car to be the Lobby car or if the group has two types of service (high and low rise, for example) and you want one car from each group to park in the Lobby. Enter a “Yes” for each car you wish to have in group one and a “No” for all others. Enter a “Yes” for each car you wish to have in group two and a “No” for all others. If you wish to set the group for normal lobby service, put all cars in group one and enter “No” for all cars in group two.
- Cars Lby Off Pk: / Cars Lby Up Pk: / Cars Lby Dn Pk:
  These parameters set the number of cars to park in the Lobby during each mode of service. These can be set from 0 to 10 and group one has a default value of 0 for DOWN PEAK, 1 for UP PEAK, and 1 for OFF PEAK. Group two has default values of 0 for all modes of service.
- Door Open Time Lobby Up Sec:
  Range is from 1 to 98 seconds. When a lobby-parked car is assigned This Car Up status is will open its doors for the period of time set here. If set to 99, the doors will remain open until the car is preparing to leave the lobby.
- Door Open Time Lobby After Car Call:
  Range is from 1 to 98 seconds. This setting “times out” the Door Open Time Lobby Up Sec timer, allowing the doors to close if a car call is entered or the car is otherwise assigned. The default is 5 seconds.
- Modem Parameters:
  Used when the dispatcher is set to dial up and report status to a central station.
  - Vol (0 - 3): Set the desired modem volume.
  - Ph#: Enter the complete phone number (with prefixes) to be called.
  - ID#: Enter the ID assigned by the called station to identify this dispatcher.
  - Init: Enter the initialization string for the modem. Default is ATZO. The modem documentation will contain this string.

Parameter Menu 5

```
Parameter Menu 5:
   Enable A.I. Lobby Parking/Zoning?      Y N


   A.I. Status:
   Current Time Window:
   Lobby Cars:
   Zoning Floor:
```

- Enable A.I. Lobby Parking/Zoning?
  If set to Yes, IntellaNet will use artificial intelligence to dynamically control lobby parking and zoning features.
  If set to No, artificial intelligence will not be used to dynamically control lobby parking and zoning features. (Manual settings will have control.)
- A.I. Status:
  After operating and collecting data for 24 hours, the A.I. status display will be populated with data. The status data helps the user to verify lobby parking and zoning operations. These are status displays, not user-enterable parameters.

Parameter Menu 6

Depending upon specific system inputs and outputs, one of two screens may be presented. If the dispatcher is stand alone (all cars in the group are supplied by the same emergency power source), you will see the first, or stand alone screen. If the cars in a group are supplied with power from multiple feeders (and also in some cases of multi-bank emergency power operation when a full range of options must be available), you will see the second, or split emergency power screen.

Stand Alone Emergency Power Screen

```
Parameter Menu 6:
   Emergency Power: Stand Alone
   Ret Att/Ind Cars Em Pwr PH 1?          Y N
   Em Pwr: Amt Cars Manual Select:         __
   Timeout: Em Pow Ret:                    __
   Emg Pwr Ph2 Auto Select Priority Groups:
    1: __  __  __  __  __  __  __  __  __  __
    2: __  __  __  __  __  __  __  __  __  __
   Amount Cars     Group 1:__      Group 2:__
   Add No. Cars Group 1 to Group 2 if
   Group 1 Cars Cannot Return?            Y N
   Phase 2 Emergency Power Return to Service
   Att/Ind Cars After Auto Cars?          Y N
   Interdisp Em Pwr Times:  PHI__      PHII__
   Phase 1 Recall Order (Enter Car # 1-10)
   Ph1 Order:   __ __ __ __ __ __ __ __ __ __
   Max Number Cars to Run on Phase 1:      __
   Emg Switch Normally Open:              Y N
```

- Emergency Power:
  - Stand Alone: Automatically detected. Cannot be set by user.
  - Master: This dispatcher will initiate the emergency power return sequence and will have preference to go back to service on emergency power Phase 2.
  - Slave: This dispatcher will return on emergency power Phase 1 after the other simplex/group has finished its return. This dispatcher will not have preference to go back to service on emergency power Phase 2.
- Ret Att/Ind Cars Em Pwr Ph1:
  Applies only to cars on Attendant or Independent service at a floor with their doors open when the Emergency Power signal is activated. If the door is not open, the car will obey a Phase 1 recall to the recall floor. If you wish to bring cars on Attendant or Independent service down to the recall floor in all situations, set this to Yes. If set to yes, the door will close and the car will be returned to the recall floor in the order assigned. If set to No, the car will not return. If the car is selected to run on Phase 2, it will return to service from the present floor. This parameter should be set to match the parameter in the car parameter menu.

- Em Pwr: Amt Cars Manual Select:
  When manual Phase 2 (run on emergency power) is active, this parameter sets the number of cars from each group that should be run.
- Timeout: Em Power Ret:
  Enter the time in seconds that the dispatcher should attempt to call/return a non-responsive car on Phase 1 recall before moving on to the next car. After completing recall, the dispatcher will once again return to non-responsive cars and attempt recall. If the car again fails to respond, it will be reported Out of Service.
- Emg Pwr PH2 Auto Select Priority Groups:
  For each priority group, enter the car numbers in the order in which they should be selected to run on Emergency Power Phase 2.
- Amount Cars Group 1: Group 2:
  For each priority group, enter the number of cars that should be run when automatic Phase 2 (run on emergency power) is active.

Note

An elevator group should not be confused with an emergency power priority group. One elevator group may be split into two emergency power priority groups, Group 1 and Group 2.

- Add No. Cars Group 1 to Group 2 if Group 1 Cars Cannot Return?
  If Group 1 cars are unable to return, should the number of Group 1 cars selected to run (but now unavailable) be added to Group 2?
- Phase 2 Emergency Power Return to Service Att/Ind Cars After Auto Cars?
  If set to Yes, Attendant/Independent cars subject to and recalled during Phase 1 will be placed on Phase 2 service **after** cars returned from automatic passenger service.
  If set to No, prior operating mode will not be considered when placing cars on Phase 2 service.
- Interdisp Em Pwr Times PH 1:
  Setting this parameter on Group A tied to Group/Simplex B for emergency power purposes will adjust the amount of time (in minutes) to be given Group/Simplex B to complete its emergency power return Phase 1 before allowing emergency power Phase 2 on Group A. This parameter only affects groups set up as Master for emergency power purposes. Minimum: 0. Maximum: 20. Default: 1.
- Interdisp Em Pwr Times PH2:
  If Group A is tied to Group/Simplex B for emergency power purposes and none of the Group A cars are able to go on emergency power Phase 2, this parameter will adjust the amount of time (in seconds) to be given Group/Simplex B to go on emergency power Phase 2 before Group A retries placing one of its cars on emergency power Phase 2. This parameter only affects groups set up as Master for emergency power purposes. Minimum: 0. Maximum: 99. Default: 60.
- Phase 1 Recall Order (Enter Car # 1-10): Default is 1, 2, 3, 4, 5, 6, 7, 8, 9, 10. Enter car numbers from left to right to specify the desired order of recall. This sequence will be bypassed when some of the cars are on emergency status (i.e., medical or fire phase 2). If an invalid car number is entered, the default order will be used. Entries must all be two digits. For example, car 2 is entered as 02.

- Max Number Cars to Run on Phase 1:
  Sets the maximum number of cars that may be run on Phase 1 (recall) simultaneously. Minimum: 0. Maximum: 10. Default: 1. Should be determined by the capacity of the emergency power source.
- Emg Switch Normally Open:
  Reverses the polarity of the Emergency Power input.
  If set to Yes, the dispatcher will be on emergency power when the EMG input is on.
  If set to No, the dispatcher will be on emergency power when the EMG input is off.
  This parameter should be set to the same value as the like-named car menu setting. When both car and dispatcher parameters are set to No, and the power supply for the car and dispatcher emergency power inputs are separate, emergency power will be fail-safe. That is, if a blown fuse causes the loss of the EMG signal on the car and/or the dispatcher, the car will remain halted.

Split Feeder Emergency Power Screen

```
Parameter Menu 6:
   Emergency Power: Split
   Phase 1 Recall Order, Auto Phase 2
   Selection Order (Enter Car Number 1-10):
   PH1 Order: __ __ __ __ __ __ __ __ __ __
   PH2 Order: __ __ __ __ __ __ __ __ __ __
   Car Feeder and Auto PH2 Grp Assignment:
   Cars:       1  2  3  4  5  6  7  8  9 10
   Feeder:     _  _  _  _  _  _  _  _  _  _
   PH2 Group#: _  _  _  _  _  _  _  _  _  _
   Max Number Cars This Dispatcher to Run:
      Phase 1: _              Phase 2: _
     Feeder A: _             Feeder B: _
   Auto PH2 Group 1: 1   Group 2: 0
   Add Number of Group 1 Cars to Group 2
   When Group 1 Cars Can't Return?      Y N
   Phase 1 Car Timeout: ____
   Recall Att/Ind Cars on Phase 1?      Y N
   Place Att/Ind Cars on Phase 2
   After Automatic Cars?                Y N
   EMGA/EMGB Switches Normally Open:    Y N
   Total Num of Banks:__   This Bank Num:__
```

- Emergency Power:
  - Split: Automatically detected. Cannot be set by user.
- Phase 1 Recall Order, Auto Phase 2 Selection Order:
  These parameters allow you to enter the order in which cars should be recalled during Phase 1 and the order in which cars should be selected to run in Phase 2.
- Car Feeder and Auto PH2 Grp Assignment:
  For each car in the group, assign the feeder (generator), A or B.
  For each car in the group, assign Phase 2 group (1 or 2) priority.
- Max Number Cars This Dispatcher to Run:
  - Phase 1: How many cars can be returned to the recall floor simultaneously?
  - Phase 2: How many cars can be run on emergency/generator power simultaneously?
  - Feeder A: How many cars can be run on emergency feeder A?
  - Feeder B: How many cars can be run on emergency feeder B?
- Auto PH2 Group 1: / Group 2:
  When Phase 2 (run on emergency power) is active, how many cars should be run from each group?
- Add Number of Group 1 Cars to Group 2 when Group 1 Cars Can't return?
  If Group 1 cars are unable to return should the number of Group 1 cars selected to run (but now unavailable) be added to Group 2? Set to Yes or No.

- Phase I Car Timeout:
  Enter the time in seconds that the dispatcher should attempt to call/return a non-responsive car on Phase I recall before moving on to the next car. After completing recall, the dispatcher will once again return to non-responsive cars and attempt recall. If a car again fails to respond, it will be reported out of service.
- Recall Att/Ind Cars on Phase 1?
  This only applies to cars that are on attendant or independent at a floor with their doors open when the Emergency Power signal is activated. If the door is not open, the car will do a Phase I recall to the recall floor. If you wish to bring cars on attendant or independent down for an Emergency Power Phase I Recall in all situations, set this to “Yes”. If you set this to “Yes” the door will close and the car will be brought to the recall floor in the order assigned. If set to “No” the car will not return. If the car is selected to run on phase II, it will return to service from the present floor. This parameter should be set to match the parameter in the car parameter menu.
- Place Att/Ind Cars on Phase 2 After Automatic Cars?
  Set to Yes if cars subject to and recalled during Phase 1 should be placed on Phase 2 service AFTER cars returned from Automatic service.
  Set to No, if the prior mode (Independent/Attendant/Automatic) should not be considered when placing a car on Phase 2 service.
- EMGA/EMGB Switches Normally Open?
  If set to Yes, the dispatcher will be on emergency power when the EMG input is on.
  If set to No, the dispatcher will be on emergency power when the EMG input is off.
  This parameter should be set to the same value as the car EMG Switch Normally Open parameter. When the car and dispatcher parameters are set to No, and the power supply for the car and dispatcher emergency power inputs are separate, emergency power will be fail-safe; that is, if a blown fuse causes the loss of the EMG signal on the car and/or the dispatcher, the car will remain halted. If this parameter is not present on the cars in this dispatcher group, this parameter should be set to Yes.
- Total Num of Banks:
  Used only on groups when the group is set up for multi-bank / split feeder Emergency Power operation. This parameter should be set to the total number of banks that will share the Emergency Power buses. It affects bus selection timing. It is identical to the simplex car Emergency Power split feeder parameter of the same name.
  Minimum: 1. Maximum: 10. Default: 1.
- This Bank Num:
  Used only on groups when the group is set up for multi-bank / split feeder Emergency Power operation. This parameter is used to identify which number bank this car is in. Each dispatcher or simplex car tied to the same Emergency Power generator(s) must have a unique number. This parameter affects bus selection timing and so will also control the order banks put cars on automatic Phase 2 service.

Lock Screen

```
Lock Screen Menus:

     Lock Screen Car 1 (Front or Rear)
     FL  U  D  C    FL  U  D  C
      B  N  Y  N    18  N  Y  Y
      1  N  N  N    19  N  N  N
      2  N  N  N    20  N  N  N
      3  N  N  N    21  N  N  N
      4  N  N  N    22  N  N  N
      5  N  N  N    23  N  N  N
      6  N  N  N    24  N  N  N
      7  N  N  N    25  N  N  N
      8  N  N  N    26  N  N  N
      9  N  N  N    27  N  N  N
     10  N  N  N    28  N  N  N
     11  N  N  N    29  N  N  N
     12  N  N  N    30  N  N  N
     13  N  N  N    31  N  N  N
     14  N  N  N    32  N  N  N
     15  N  N  N    33  N  N  N
     16  N  N  N    34  N  N  N
     17  N  N  N    35  Y  N  N
```

There is a separate lock screen for each car in the group. (Car 1 is shown in the example above.)

- For each floor (FL):
  - U (up direction): Y = Hall call disabled/locked. N = Hall call enabled.
  - D (down direction): Y = Hall call disabled/locked. N = Hall call enabled.
  - C (car call): Y = Car call to this floor disabled. N = Car call to this floor enabled.

Note

These locks will not unlock floors that have been locked through hardware lockouts. If you are using a remote locking system, you will NOT be able to unlock these locks with the remote system.

Security Access Code Screen

```
Security Access Codes Menu:

  Landing Name  B  1  2  3  4  5  6  7  8
  And Its Code  1  2  3  4  5  6  7  8  9

   B 00000000  18 00000000
   1 00000000  19 00000000
   2 00000000  20 00000000
   3 00000000  21 00000000
   4 00000000  22 00000000
   5 00000000  23 00000000
   6 00000000  24 00000000
   7 00000000  25 00000000
   8 00000000  26 00000000
   9 00000000  27 00000000
  10 00000000  28 00000000
  11 00000000  29 00000000
  12 00000000  30 00000000
  13 00000000  31 00000000
  14 00000000  32 00000000
  15 00000000  33 00000000
  16 00000000  34 12312312
  17 00000000  35 55660000
```

Landing Label (name)

Floor Number

These two rows display floor labels and actual floor numbers for the first nine floor front-openings served by all cars in the group.

This screen allows you to set a security access code for each floor served by this dispatcher. The screen will only appear on installations that have the security access code feature enabled. By default, all floor access codes are set to 00000000 (no security code assigned).

Security codes may be up to 8 digits using the numbers 1 through 9 only. If you want to assign a shorter code, enter the desired number of digits, followed by zeros. The trailing zeros tells the dispatcher that you are assigning a code of fewer than eight digits. (Short code example shown for floor 35 above.)

On the car operating panel, either a dedicated Start/End Code button or the Fire Reset button (whichever the job is configured to use) is pressed before and after the security code is entered.

Usage:

- Press Start/End Code (or Fire Reset) button, indicating a secured floor number and a security code will be entered next.
- Press desired floor button, followed by security code, and finally by Start/End Code or Fire Reset button to indicate that floor and code entry are complete.
- If the code was correct, the floor button will light, indicating that the call has been latched.
- If the correct code is not entered for a user-defined (1 - 199 seconds, default = 15 seconds) period of time, the entry is considered incomplete and the car panel will return to its normal state.

Change/Disable Password

If Change/Disable Password is selected from the main menu, the following screen will appear:

```
Password Menu:

    Parameter Password Protection Enabled: Y N
    Change Password



    Internal Use Only - Do Not Set ___
```

A password protects all parameters from being changed unless the correct password is first entered.

- Parameter Password Protection Enabled:
  - Yes = password entry required to change parameters.
  - No = password entry not required to change parameters.
- Change Password:
  If selected, accesses a screen on which a password may be selected.

Multiple Dispatchers Linked for Emergency Power

If two or more simplexes or groups of cars are required to be inter-locked for emergency power operation, the inter-lock is accomplished using two inputs and two outputs per each simplex or group. A description of inputs, outputs, and parameters used to link the dispatchers together follows.

Description of Phase I Operation

The RET1 inputs and outputs are used to link the groups for Emergency Power Phase I. Each dispatcher has an RET1 input and output. When going on Emergency Power, it is assumed that all the groups will receive the “EMG” signal simultaneously. The master dispatcher starts recalling its cars one at a time. When the Phase I Recall is finished, the dispatcher will turn on its RET1 output. This output is wired to the RET1 input of the next dispatcher in the chain. When the next dispatcher receives the RET1 input, it will recall all of its cars. After the recall is complete, it will turn on its RET1 output. This scenario will repeat itself until all the simplex cars and groups have completed the Phase I Recall.

The last group or simplex car in the chain has its RET1 output wired to the Master dispatcher RET1 input. When it completes the Phase I Recall, it turns on its RET1 output, turning on the RET1 input to the Master dispatcher. This will indicate to the Master dispatcher that all groups have completed the Phase I Recall.

If a group is unable to complete the Phase I Recall, it will be bypassed by turning on its RET1 output after 65 seconds. On the master group, the Interdisp Em Pwr Times: Ph 1 parameter controls how long the RET1 output will be on, allowing the subsequent group to complete its Emergency Power Phase 1 before the master group proceeds to Emergency Power Phase 2. Losing the RET1 input after going on emergency power Phase 1 has no effect on either the master or any subsequent dispatchers.

Description of Phase II Operation for the Master Dispatcher

Once the Master dispatcher sees its RET1 input turn on, it will allow its cars to go back in service on Emergency Power Phase II. It will only place a car in service if its RET2 input and output are off. If the Master is able to place a car on Emergency Power Phase II, it will turn its RET2 output off. If it is not able to place a car in service, it will turn on the RET2 output after one minute. Once the RET2 output is on, the Master starts monitoring the RET2 input. If the input does not turn on in the amount of time set via the parameter “INTERDISP EM PWR TIMERS: PH2”, the Master turns off its RET2 output. This will allow the master to again try to place its car(s) in service. There will only be one re-try attempt.

If the RET2 input does go from on to off, the master will go on Emergency Power Phase I. Losing the RET1 input during Emergency Power Phase II has no effect.

If, while on Emergency Power Phase II, a selected car is de-selected, the car will first finish answering its current hall and car call assignments then return to the recall floor. The status of the RET1 output does not change, meaning RET1 will continue to stay on. RET2 will be turned on and then off if no cars in the group are any longer on Emergency Power Phase II.

Description of Phase II Operation for Subsequent Dispatchers

Any subsequent dispatchers will only place their car(s) in service if their RET2 input is turned on. If it succeeds in placing a car(s) in service, the dispatcher will turn on its RET2 output.

If the RET2 input goes from on to off, the dispatcher will go on Emergency Power Phase I. Losing the RET1 input during emergency power phase 2 has no effect.

If, while on Emergency Power Phase II, a selected car is de-selected, the car will first finish answering its current hall and car call assignments then return to the recall floor. The status of the RET1 output does not change, meaning RET1 will continue to stay on. RET2 will be turned off if no cars in the group are on Emergency Power Phase II.

Emergency Power: Split Feeder / Multi Bank

This feature enhances the standard emergency power features to handle a dispatcher or building partial power failure, allow multiple dispatchers to operate together under emergency power, and allow multiple cars from different banks to operate on Phase 1 and Phase 2 emergency power.

Partial Power Failure

The dispatcher EMG input was split into two EMGA and EMGB inputs to accommodate the situation of partial power failure inside a bank. Each input represents one feeder source. If either feeder fails any cars assigned to that feeder will begin the emergency power sequence. Cars not powered by the failed feeder will remain in normal service. The Pretransfer and/or Normal Power Restored inputs (PTS/NPWR) affect all cars regardless of feeder assignment.

Multiple Banks

The system uses relays to communicate the status of each banks feeder emergency power sequence. The inputs include Phase 1 enable (RETA, RETB, RET) for each feeder and Phase 2 enable (PH2E). The outputs include Emergency Power On (EMPA, EMPB, EMP) and Phase 1 Complete (RTDA, RTDB, RTD) for each feeder. The inputs and outputs of the different banks are interconnected and dictate through relay logic each banks Phase 1 and Phase 2 sequencing relationships.

Multiple Cars

The system uses emergency power buses that are tied to each bank to communicate to each other how many cars are running. Each bus represents one car in operation. When all the buses are taken, no more cars may be put in operation. The system is designed to stagger the bus selection process to guarantee that no two banks can select an emergency power bus at the same time.

Emergency Power Bus Selection

The Emergency Power Bus is a unit that represents enough power to run one car regardless of what bank that car is in. The bus is used to avoid having multiple banks put too many cars in service. The emergency power bus selection process uses the banks unique number (ID) and the total number of banks in the building (TOTAL). Once it is determined that a bus is required, the following steps are taken:

1. Wait ID seconds.
2. Select a free bus.
3. Turn on that bus output (BRn) for one second. Since the output is tied into all the other bank inputs (EBn), other banks will not select the same bus.
4. Wait (with the bus output off) for (2 + ID/2) seconds.
5. During the preceding two steps, the input line for that bus is monitored. If the input follows the output, the bank determines that there is no other bank trying to select that bus. That bus is selected.
   If the input does not follow the output, that bus is disabled and the bank will return to step 2. If all the buses are disabled or in use, the bank will wait for TOTAL seconds before starting the process over again at Step 1.

Testing

13

In This Section

This section describes the final test procedures necessary before releasing the IntellaNet controller to passenger service.

Danger

Elevator control products must be installed by experienced field personnel. This manual does not address code requirements. The field personnel must know all the rules and regulations pertaining to the safe installation and running of elevators.

Terminal Limit Test - NTS Top

1. With the car on Automatic Operation, place it at approximately the center of its travel.
2. Place the Door Disable switch on the relay board in the down, or Disable position.
3. Access the Car Parameters menu.
4. Go to Terminal Slowdowns on the Main Parameters Menu.
5. Select Press Enter For NTS Test. Press the “0” key.
6. A message will be displayed confirming that the NTS test has been activated and that the test mode is aborted by placing the car on inspection operation.
7. Reset the MPU. When the diagnostic screen appears, the Limit Status will show !!! NTS TEST!!!.
8. Place a call for the top floor. The car will ramp up to speed and the MPU will not demand the car to go into slowdown. The TSD (Terminal Slowdown) processor will initiate an NTS stop at the top floor, causing the car to slow down and stop in the door zone at the top floor.
9. After the car stops, place it on inspection. This will terminate the NTS Test mode.

Terminal Limit Test - NTS Bottom

1. With the car on Automatic Operation, place it at approximately the center of its travel.
2. Place the Door Disable switch on the relay board in the down, or Disable position.
3. Access the Car Parameters menu.
4. Go to Terminal Slowdowns on the Main Parameters Menu.
5. Select Press Enter For NTS Test. Press the “0” key.
6. A message will be displayed confirming that the NTS test has been activated and that the test mode is aborted by placing the car on inspection operation.
7. Reset the MPU. When the diagnostic screen appears, the Limit Status will display !!! NTS TEST!!!.
8. Place a call for the bottom floor. The car will ramp up to speed and the MPU will not demand the car to go into slowdown. The TSD (Terminal Slowdown) processor will initiate an NTS stop at the bottom floor, causing the car to slow down and stop in the door zone at the top floor.
9. After the car stops, place it on inspection. This will terminate the NTS Test mode.

Terminal Limit Test - ETS Top

1. With the car on Automatic Operation, place it at approximately the center of its travel.
2. Place the “Door Disable” switch on the relay board in the down, or “Disable” position.
3. Access the Car Parameters menu.
4. Go to Terminal Slowdowns on the Main Parameters Menu.
5. Select Press Enter For ETS Test. Press the “0” key.
6. A message will be displayed confirming that the ETS test has been activated and that the test mode is aborted by placing the car on inspection operation.
7. Reset the MPU. When the diagnostic screen appears, the Limit Status will display !!! ETS TEST!!!.
8. Place a call for the top floor. The car will ramp up to speed and the MPU will not demand the car to go into slowdown. The TSD (Terminal Slowdown) processor will not initiate an NTS stop at the top floor, causing the ETS trip to occur. The ETS trip will cause the motion outputs to drop and the safety circuit to open.
9. After the car stops, place it on inspection.

This will terminate the ETS Test mode.

Terminal Limit Test - ETS Bottom

1. With the car on Automatic Operation, place it at approximately the center of its travel.
2. Place the Door Disable switch on the relay board in the down, or Disable position.
3. Access the Car Parameters menu.
4. Go to Terminal Slowdowns on the Main Parameters Menu.
5. Select Press Enter For ETS Test. Press the “0” key.
6. A message will be displayed confirming that the ETS test has been activated and that the test mode is aborted by placing the car on inspection operation.
7. Reset the MPU. When the diagnostic screen appears, the Limit Status will display !!! ETS TEST!!!.
8. Place a call for the bottom floor. The car will ramp up to speed and the MPU will not demand the car to go into slowdown. The TSD (Terminal Slowdown) processor will not initiate an NTS stop at the top floor, causing the ETS trip to occur. The ETS trip will cause the motion outputs to drop and the safety circuit to open.
9. After the car stops, place it on inspection.

This will terminate the ETS Test mode.

Car Buffer Test

Note

It is sometimes necessary to tie down the counterweight safety arm for this test as the counterweight may bounce in the overhead, set the counterweight safeties, and become lodged in the overhead.

Danger

If the car to be tested has 2 to 1 roping, it is important to confirm that all rope guards are in place and properly positioned. If the guards are missing or too much space exists between the guards and the ropes, the ropes could jump out of the sheave grooves.

1. On Automatic Operation, place the car at approximately the center of its travel.
2. Place the “Door Disable” switch on the relay board in the down, or “Disable” position.
3. Access the Car Parameters menu.
4. Go to Terminal Slowdowns on the Main Parameters Menu.
5. Select Press Enter For Buffer Test. Press the “0” key.
6. A message will be displayed confirming that the Buffer test has been activated and that the test mode is aborted by opening the safety circuit.
7. Reset the MPU. When the diagnostic screen appears, the Limit Status will display !!! BUFFER TEST!!!.
8. Place a call for the bottom floor. The main processor will not initiate a slowdown and the TSD (Terminal Slowdown) processor has been disabled so the car will continue into the pit, compressing the car buffer.
9. After the car stops, immediately place it on inspection.
10. Confirm that the hoist ropes and compensating ropes have not jumped out of the grooves on all sheaves.
11. Confirm that the compensating sheave has not come out of its rails, if applicable.
12. Place a jumper from Relay Board terminal PIT1 to PIT2. Run the car on inspection up one floor above the bottom floor.
13. Remove the jumper from PIT1 to PIT2.
14. Put the car back on automatic and place a call for the bottom floor. Make sure the car makes a normal stop and comes into the bottom floor level.

Counterweight Buffer Test

Note

It is sometimes necessary to tie down the car safety arm for this test as the car may bounce while it is in the overhead and set the safety.

Danger

If the car to be tested has 2 to 1 roping, it is important to confirm that all rope guards are in place and properly positioned. If the guards are missing or too much space exists between the guards and the ropes, the ropes could jump out of the sheave grooves.

1. On Automatic Operation, place the car at approximately the center of its travel.
2. Place the “Door Disable” switch on the relay board in the down, or “Disable” position.
3. Access the Car Parameters menu.
4. Go to Terminal Slowdowns on the Main Parameters Menu.
5. Select Press Enter For Buffer Test. Press the “0” key.
6. A message will be displayed confirming that the Buffer test has been activated and that the test mode is aborted by opening the safety circuit.
7. Reset the MPU. When the diagnostic screen appears, the Limit Status will display !!! BUFFER TEST!!!.
8. Place a call for the top floor. The main processor will not initiate a slowdown and the TSD (Terminal Slowdown) processor has been disabled so the car will continue into the overhead, compressing the counterweight buffer.
9. After the car stops, immediately place it on inspection.
10. Confirm that the hoist ropes and compensating ropes have not jumped out of the grooves on all sheaves.
11. Confirm that the compensating sheave has not come out of its rails, if applicable.
12. Place a jumper from Relay Board terminal HW1 to HW2. Run the car on inspection down one floor below the top floor.
13. Remove the jumper from HW1 to HW2.
14. Put the car back on automatic and place a call for the top floor. Make sure the car makes a normal stop and comes into the top floor level.

Car Governor Overspeed Test

Note

If the counterweight is equipped with safeties, it is sometimes necessary to tie down the counterweight safety during this test as the counterweight may bounce and trip the safety after the car safety has set.
If the MPU “OVERSPEED” parameter is set, you will need to change this to a value equal to approximately 150% of contract speed to perform the normal overspeed tests for your local inspectors. This parameter should be set back to the correct value after this test is complete.

Danger

If the car to be tested has 2 to 1 roping, it is important to confirm that all rope guards are in place and properly positioned. If the guards are missing or too much space exists between the guards and the ropes, the ropes could jump out of the sheave grooves.

1. Bring the car to a floor above the bottom floor where there is enough room to accelerate to a speed which will trip the governor. It is best to perform this test toward the bottom of the hoistway so, if the safety does not release, it can be easily accessed.
2. TEMPORARILY set the Motor RPM parameter in the drive to 150% of its present value. (Parameter 11 on the Magnetek DC drive, and CONTRACT MTR SPD in the Magnetek AC drive). On the Amicon generator shunt field regulator, set the SW1 dip switches to their next highest setting.
3. Place a temporary jumper across the car governor overspeed switch.
4. Place a car call such that the car will reach top speed. Do not place a call any closer than three floors from the bottom.
5. The car will accelerate past contract speed until the governor trips. Immediately place the car on inspection.
6. Restore the Motor RPM parameter to its correct value, or reset SW1 on the Amicon regulator.
7. Remove the temporary jumper placed across the governor overspeed switch.
8. Check that the compensating sheave has not come out of its rails, if applicable.
9. Confirm that the hoist ropes and compensating ropes have not jumped out of the grooves on all sheaves and inspect the car, cab, and counterweight for any damage.
10. Reset the governor overspeed switch.
11. Inch the car up until the governor jaw can be reset.
12. Untie the counterweight governor jaw and reset the latch, if applicable.

Counterweight Governor Overspeed Test (If Applicable)

Note

If the MPU "OVERSPEED" parameter is set, you will need to change this to a value equal to approximately 150% of contract speed to perform the normal overspeed tests for your local inspectors. This parameter should be set back to 110% of contract speed after this test is complete.

1. Bring the car to a floor below the top floor where there is enough room to accelerate to a speed which will trip the counterweight governor. It is best to perform this test toward the top of the hoistway so, if the counterweight safety does not release, it can be easily accessed.
2. TEMPORARILY set the Motor RPM parameter in the drive to 150% of its present value. (Parameter 11 on the Magnetek DC drive, and CONTRACT MTR SPD in the Magnetek AC drive). On the Amicon generator shunt field regulator, set the SW1 dip switches to their next highest setting.
3. Tie the Car governor jaw up to prevent it from dropping.
4. Place a temporary jumper across the car governor overspeed switch.
5. Place a car call such that the car will reach top speed. Do not place a call any closer than three floors from the top.
6. The car will accelerate past contract speed until the governor trips. Immediately place the car on inspection.
7. Restore the Motor RPM parameter to its correct value, or reset SW1 on the Amicon regulator.
8. Remove the temporary jumper placed across the governor overspeed switch.
9. Check that the compensating sheave has not come out of its rails, if applicable.
10. Confirm that the hoist ropes and compensating ropes have not jumped out of the grooves on all sheaves and inspect the car, cab, and counterweight for any damage.
11. Reset the governor overspeed switch.
12. Inch the car down until the governor jaw can be reset.
13. Untie the car governor jaw and reset the latch.

Unintended Movement Test

1. Place the car at the bottom floor with no load in the car.
2. With car on Independent Service, block the hoistway door open with a screwdriver.
3. Place a barricade in front of the hoistway doors.
4. Place a TEMPORARY jumper from terminal AC1 to terminal J1-1 on the Brake Driver.
5. Have someone stand in front of the elevator to prevent anyone from entering the car.
6. Using a small screwdriver, press in on relays BK and BK1. The brake will lift and the car will start to move up away from the floor.
7. When the car moves out of the door zone, the Rope Gripper Board will command the gripper to apply, stopping the car. The “Unintended Movement” LED on the Rope Gripper Board will be illuminated.
8. Release relays BK and BK1. Remove the jumper installed in step 4.
9. To release the gripper, press the “Gripper Reset” toggle on the Rope Gripper Board.

Note

Once the Rope Gripper Board triggers, the only way to release the gripper is to cycle the “Gripper Reset” toggle. The tripped state is written to the nonvolatile memory of the Rope Gripper so cycling power to the control system will not reset the gripper.

10. Place the car at the top floor with full load in the car.
11. With car on Independent Service, block the hoistway door open with a screwdriver.
12. Place a barricade in front of the hoistway doors.
13. Place a TEMPORARY jumper from terminal AC1 terminal J1-1 on the Brake Driver.
14. Have someone stand in front of the elevator to prevent anyone from entering the car.
15. Using a small screwdriver, press in on relays BK and BK1. The brake will lift and the car will start to move down away from the floor.
16. When the car moves out of the door zone the Rope Gripper Board will command the gripper to apply, stopping the car. The Unintended Movement LED on the Rope Gripper Board will be illuminated.
17. Release relays BK and BK1. Remove the jumper installed in step 4.
18. To release the gripper press the “Gripper Reset” toggle on the Rope Gripper Board.

Ascending Car Overspeed Test

Note

If the MPU “OVERSPEED” parameter is set, you will need to change this to a value equal to approximately 150% of contract speed to perform the normal overspeed tests for your local inspectors. This parameter should be set back to 110% of contract speed after this test is complete.

1. Place the car at the bottom floor with no load in the car.
2. TEMPORARILY set the Motor RPM parameter in the drive to 150% of its present value. (Parameter 11 on the Magnetek DC drive, and CONTRACT MTR SPD in the Magnetek AC drive). On the Amicon generator shunt field regulator set the SW1 dip switches to their next highest setting.
3. Tie the Car governor jaw up to prevent it from dropping.
4. Place a temporary jumper across the car governor overspeed switch.
5. Place a car call such that the car will reach top speed. The car will accelerate past contract speed until the Rope Gripper Board trips and the gripper applies. The “Overspeed” LED on the Rope Gripper Board will be illuminated.
6. Place the car on inspection Operation. Confirm that the hoist ropes and compensating ropes have not jumped out of the grooves on any sheave and inspect the car, cab, and counterweight for any damage.
7. Reset the Motor RPM parameter in the drive to its proper value.
8. To release the gripper press the “Gripper Reset” toggle on the Rope Gripper Board.

Note

Once the Rope Gripper Board triggers, the only way to release the gripper is to cycle the “Gripper Reset” toggle. The tripped state is written to the nonvolatile memory of the Rope Gripper so cycling power to the control system will not reset the gripper.

Index

Symbols

% Bypass Ol 10-32
% Full Load weight Byp 10-32
% Full Load weight Disp 10-32
%FL 10-3

Numerics

0. LF.50-55
High speed and Earthquake operation 6-15
110-volt signals 3-9
16 channel I/O boards 3-9
24-volt or 110-volt AC or DC inputs 3-9
24-volt signals 3-9

A

A.I. Status 12-22
AC Drive
TORQMAX Parameters Quick Reference 6-25
AC drive cable 3-7
AC drive supply leads 2-3
Accel Rate (ft/s2) 10-24
Acceleration curve displays 10-20
Access code timeout 10-43
Add No. Cars Group 1 to Group 2 if Group 1 Cars Cannot Return? 12-24
Add Number of Group 1 Cars to Group 2 when Group 1 Cars Can't return? 12-26
Add. plat. length (ft) 10-25
Add. plat. length Speed 10-25
Adding car station inputs/outputs 3-14
Advance (counts) 10-25
Advanced PIs and hall lanterns? 10-29
Advantages 12-16
Alarm status trigger time (sec) 10-43
Allow New Car Calls before VIP Phase 1 10-40
Alt. odd/even calls on HBF/Disp fail? 10-43
Amicon reference 7-23
Amicon start up 7-7
Amount Cars Group 1 12-24
Amt hall & car calls before HP switch 10-47
Analog reference (MG) 3-8
ANSI-1996 DCL required at startup? 10-34
AREC, BREC, CREC Inputs Normally Open? 12-14
AREC/BREC/CREC Inputs Normally Open? 10-38
ATT 12-3
Auto Car Call Locks By Time 12-17
Auto inconspicuous riser? Timeout
10-47
Auto Peelle door open timeout (sec) 10-35
Auto PH2 Group 1
/ Group 2 12-26
Auto-tuning AC Induction Motors 6-10
Auto-tuning PM AC Machines 6-13

B

B_MON Fault 3-5, 10-19
BAC_MON Fault 3-5, 10-19
Battery backup 3-8
Binary PI start at 0 or 1? 10-30
Blind hatch 2-11
Brake pick switch 10-27
Brake times (0.1 sec) 10-28
Buffer test 10-61
Buz replaces FPC? 10-31
BYP 12-3
Bypass car call locks on ATT? 10-31
Bypass car call locks on IND? 10-31
Bypass Car Call Locks on Medical Ph 2? 10-42
Bypass Hall Call Time (sec) 12-16
Bypass In Car Stop Switch on Med Rec Ph 1? 10-41
BZI norm closed? 10-31

C

C status 10-3
Cancel car calls before LMGS shutdown? 10-29
Cancel car calls before LRN shutdown? 10-29
Car calls latch behind car? 10-31
Car Door Bypass 3-11
Car Fault Timeout (sec) 12-16
Car Feeder and Auto PH2 Grp Assignment 12-26
Car group # (1 - 10) main 10-62
Car lantern timeout (99 = no timeout) 10-30
Car run through brake time (sec) 10-28
Car speeds under 200 FPM 8-4
Car station expansion boards 3-14
Car station input wiring 3-15
Car station output wiring 3-15
Card reader call confirm operational? 10-31

Cars Lby Off Pk 12-21
CE Voice unit 10-51
Change Password 10-62
CLAMP - NTS DN 8-10
CLAMP - NTS UP 8-10
Clear drive error 6-7
Clearing events 10-18
Close button functional in lobby? 10-34
CMR 12-3
conF 6-10
Construction operation 2-12
Contract speed 10-22
Controller cabinet 1-4
Controller Power Up
    Amicon regulator 7-2
    HPV900 5-1, 6-1
Counter weight zone 10-42
Cross Cancel Time (0.1 sec) 12-19
Cross Registration ETA (sec) 12-19
Cross Registration On Time (0.1 sec) 12-19
Cross Registration/Cancel Operation 12-19

D

DCL / DOL closed at limits? 10-34
Disable power door operation on Insp 10-34
Disabled code - (FPC) latched? 10-31
Dispatcher Communication Via 10-62
Dispatcher wiring 2-5
Dist. (counts) level 10-25
Dist. (counts) Relevel 10-25
Distance RC to drop before the floor 10-44
DNG/DDG/DNGR/DDGR double chime times 10-28
DOB ignores alt/norm car call config? 10-35
DOB ignores car call locks? 10-35
Does This Dispatcher Have a Backup? 12-19
Door close motor protection? 10-34
Door Disable Switch 3-6
Door Disconnect Service 3-6
Door Open Time Lobby After Car Call 12-21
Door Open Time Lobby Up Sec 12-21
Door open/Car dir lobby time (0.1 sec) 10-46
Door recycle on direction change? 10-34
Door Time Med EM Recall (sec) 12-16
Door Times 10-33
    Car call 10-33
    Freight 10-33
    Hall call 10-33
    Lobby 10-34
    Lobby after call 10-34
    Nudging 10-33
    Reopen 10-33
Door zone magnet 3-16
Doors open simultaneously auto? 10-34
Doors Open Simultaneously? 12-16
Drive error, clearing 6-7
Drive Motor/Encoder Setup 6-9
Drive Reset / Non-Reset Switch 3-6
Drive Run Sequence 6-15
Drive Type 10-26
Drop delay 10-28
Drop Group Hall Calls for IR Cars? 12-17
DSD412 reference 4-15
DSD412 self-tune 4-9
DZ_MON Fault 3-5, 10-19

E

EE Anti nuisance Enabled? 10-32
Electric eye 10-35, 10-37
Electric Eye Enabled on ATT/IND? 10-35
Electromagnetic interference 2-2
EM Power Total # of Banks 10-39
Em Pwr
    Amt Cars Manual Select 12-24
    Phase 1 Car Timeout 12-24
Emerg pwr control 10-48
Emergency Door Open Switch 3-6
Emergency Power 12-23, 12-26
Emergency Power Bus 12-33
Emergency Power On 12-32
Emergency Power Phase I 12-31
Emergency Power Phase II 12-31
Emergency Terminal Speed Limiting 8-11
EMG 12-3
Emg pw to next grp timeout Ph1
    10-48
Emg pw to next grp timeout Ph2 10-48
Emg Pwr PH2 Auto Select Priority Groups 12-24
Emg Switch Normally Open 12-25
EMG Switch Normally Open? 10-39
EMGA/EMGB Switches Normally Open? 12-27
EN_MON Fault 10-19
Encoder data download 6-12
Encoder Data for PM AC Drives 6-12
Encoder diagnostics 3-18
Encoder Excess Deviation 3-16
Encoder Excess Deviation fault 10-3
Encoder Excess Guide Wear 3-16
Encoder mounting 2-7
Encoder PPR 2-7
Encoder Sensor Failure 3-16
Encoder switches 3-18
Encoder type verification 6-12
EnDat 6-12
Energy conserv switch 10-23
Energy status based on time/day 10-47
EN-MON Fault 3-6
Entering car calls 10-17
ETS test 10-61
ETS Trip Rate 8-7
ETS trip rate (ft/s2) 10-60
ETSL 8-11
ETST position 8-12
Events 10-18
Expansion I/O boards 3-14
Express zone magnets 2-11

F

FAN output normally open? 10-43
FBY Operation 10-38, 12-14
FFA/FFB speed (fpm) accel
    / decel 10-26
Final jerk dist. (in) 10-24
Final jerk rate (ft/s3) 10-24
FIR 12-3
Fire / Emergency Power Recall Floors 12-14
Fire bypass 10-38
Fire Code 10-36, 12-14
Fire Door Close Nudging? 10-37
Fire Overrides 10-37
    LMGS? 10-37
    LRN? 10-37
    MSG 10-37
Fire Ph2 10-38
Fire Phase 1 key-switch overrides CWL? 10-42
Fire Recall Floors and Doors 10-37
Flash Med Emergency Light (MEL/MELC)? 10-42
Floor magnets 2-11
Floor pass chime (FPC) 1 down? 10-31
FLT 12-3
FOK 10-10
FRX_MON Fault 3-5, 10-19

G

G_MON Fault 3-5, 10-19
GAC_MON Fault 3-5, 10-19
Gate/Door lock bypass enable 10-44
Gen / fan shutdown time (sec) 10-43
Ground 2-3
Group Car Automatic Med Emergency Ph 2? 10-41
Groups For Lobby Coverage 12-21

H

Hall Call Imbalance Down Peak 12-14
Hall Call Imbalance Up Peak 12-13
Hall lantern timeout (99 = no timeout) 10-29
Hall lanterns enabled inconsp. riser? 10-47
HBF 12-3
HDD fl1, fl2, fl3 (0 = none) 10-32
High Speed Adjustment
    Amicon 7-18
    DSD412 4-15
    HPV900 5-11, 6-19
Hiperface 6-12
HLOF Input Normally Open? 12-17
Hoistway Door Bypass 3-11
Hoistway learn trip 3-16
Hoistway tape 2-9
Holiday operation based on time and day 10-44
HPV900 reference 5-19

I

I/O boards 3-9
I/O card addressing jumpers 3-9
If Cross Registration, Cars in Service On The Old Dispatcher 12-19
IND 12-3
IND ignores Alt/Norm car call config? 10-31
INI 12-3
Init jerk rate (ft/s3) 10-24
INS 12-3
Inspection operation 3-4
Inspection speed 10-44
Inspection speed over 20 FPM 2-12
Inspection UP/DN Switch 3-6
Intelligent Car Station board 3-14
Interdisp Em Pwr Times PH 1 12-24
Interdisp Em Pwr Times PH2 12-24
Is This Dispatcher the Backup? 12-19

J

Jerk rate (ft/s3) 10-24
Job identification 3-8

K

Keb Torqmax F5 drives, Main contactor hold time 10-44
Keep door open after emg. pwr. Ph1? 10-39
Keep lobby door open after parking? 10-47

L

L status 10-3
LCD noise 2-2
LEARN - Disconnected Tach 8-9
LEARN - Slowdown Error 8-9
LEARN - Tach Wiring Error 8-9
Learn encoder 6-10
Learn operation, TSD 10-61
Learn or Enter Motor or Encoder Data 6-10
Learn trip 10-59
Learning Encoder Data 6-12
LEV/DL_MON Fault 3-5
Leveling speed 10-22
LKO input normally open? 10-31
LKO/HLOF input normally open? 10-31
LMGS cycles door upon lobby arrival? 10-29
LMGS door open button enabled? 10-29
LMGS overrides IND and ATT? 10-30
LMGS return floor / door 10-29
Loading Data from PM AC Encoder 6-12
Lobby 1 flr/door 10-47
Lobby 2 flr/door 10-47
Lobby/top flr holiday dr time (0.1 sec) 10-44
Lock out inputs normally open? 10-31
Lock screen 12-28
Lockout Car Calls w/Hardware Hall Lock? 12-17
Lockout Car Calls with Alt Riser? 12-17
Lockout Inputs Normally Open? 12-17
LON, second channel 3-8
Long Wait Priority
    12-13

Low voltage wiring 2-4
LRN (lobby return) floor 10-29

M

M status 10-3
Magnets 2-11
Main contactor hold time (0.1 sec) 10-44
Main Disp Failure Timeout (0.1 sec) 12-19
Manual car switch operation? 10-47
Manual Induction Motor Parameter Entry 6-11
Max car calls per 10% loading 10-32
Max floor distance for HPS (counts) 10-23
Max Number Cars This Dispatcher to Run 12-26
Max Number Cars to Run on Phase 1 12-25
Maximum allowed speed differential 10-44
Maximum Car Speed (FPM) 12-19
Med Buzz Remains on Until CME Enabled? 10-42
Med PH 1 Overrides Fire PH 1 If Triggered 1st? 12-16
Med Ph 2 Immediate Door Close w/Call? 10-42
Med Ph2 Overrides Fire PH 1 10-42
Med1 Overrides Fire1 if Triggered 1st? 10-41
Medical Phase 2
    Momentary CME Input? 10-41
Medical Phase 2 Opens Both Doors? 10-41
Medical Phase 2 Opens door via DOB? 10-41
MG Start / Run Switch 3-6
MG start/run transfer time (sec) 10-44
Min time on for advanced PI (msec) 10-29
MLF 12-3
Modem Parameters 12-21
Motor leads 2-3
Motor nameplate data 6-10
Motor Pretorque Enabled 10-26
MPU 3-8
Multiple Car Calls During VIP Phase 2? 10-40

N

Net Power 3-6
Network wiring 2-5
NOR 12-3
Normal / Inspection Switch 3-6
Normally Open Inputs 10-35
    DOB 10-35
    EE 10-35
    SE 10-35
NTS deceleration rate (ft/s2) 10-60
NTS test 10-61
Nudging 10-35
    EE Bypass? 10-35
    SE Reopen? 10-35
Num Seq before Anti nuisance disable 10-32
Num stops before cc cancel/sequence 10-32
NYC/White Plains Gate/Door contact faults detected 10-36

O

OSPD contact norm closed 10-28
Overspeed trip speed 10-26

P

Parameter Password Protection Enabled 10-62
Park floor / door (0 = no park) 10-46
Pattern start delay (0.1 sec) 10-27
Peak Duration Time 12-13
Peelle door auto open/close? 10-35
Penalties 12-15
    Generator Off 12-15
    Halted Time 12-15
    Next Car Up 12-15
    This Car Up 12-15
Phase 1 Complete 12-32
Phase 1 Recall Order 12-24
Phase 1 Recall Order, Auto Phase 2 Selection Order 12-26
Phase 2 Emergency Power Return to Service Att/Ind Cars After Auto Cars? 12-24
Phase I Car Timeout 12-27
Phase I Recall 12-31
Photo eye 10-35, 10-37
Pick/Hold 10-28
Piezo-electrical car buttons? 10-31
Place Att/Ind Cars on Phase 2 After Automatic Cars? 12-27
Place car call 10-17
Plateau length (in.) 10-25
Power Applied input normally open? 10-44
Pre-open (counts) 10-25
Pretorque 3-19, 9-4
Pretorque signal 3-16
Priority Park Flrs 12-21
Processor reset 10-18
Proving Fault 3-6, 10-19

R

REC 12-3
Recall Att/Ind Cars on Phase 1? 12-27
Reduce speed on CWSW/SASW activation? 10-42
Rel delay 10-28
Relay board 3-4
Relay Board Diagnostic LEDs 3-4
Relay board switches 3-6
Releveling speed 10-22
Reopen Door with Hall Call? 12-16
Reopen door with hall call? 10-47
Reset MPU 10-18
Reset the rope gripper 3-11
Response time (1/100 sec) 10-24
Ret Att/Ind Cars Em Pwr Ph1 12-23
Return Att Cars on Medical Recall? 12-17
Return IND
    Y/N ATT
        Y/N car on Med Phase 1? 10-41
Return Ind Cars on Medical Recall? 12-17
Return IND/ATT cars on emg. pwr. PH1? 10-39
Ring down car lantern and gong once? 10-30
Ring down hall lantern and gong once? 10-28
Ring hall lanterns for car calls? 10-29
Rope Gripper board 3-11
Routing wires 2-3

RPR/Overloads Tripped 10-66
RSX 10-11
RSY 12-3
Run the motor 6-9

S

SAF 12-3
Safe edge 10-35, 10-37
Saving dispatcher parameters 12-12
Saving parameter changes 10-21
SCR / REG restart time 10-26
SCR supply leads 2-3
S-curve displays 10-20
S-curves 10-23
SE/EE/DOB changes door time to reopen time for car calls? 10-34
Security access code 12-29
Security code 12-29
Security code entry timeout (sec) 10-43
Security code timeout 10-43
Seismic reset 3-11
Seismic Run Allowed with Momentary CWL? 10-42
Sensor stick lubrication 2-9
SES 12-3
Setting
- Accel rate 10-24
- Access code 12-29
- Advanced PI notification 10-29
- Brake drop delay 10-28
- Brake Pick to Hold voltage point 10-28
- Brake release delay 10-28
- Brake release failure time 10-28
- Code blue 10-41, 12-17
- Counterweight zone 10-42
- Cross registration 12-19
- Door boost 10-32
- Door preopening 10-25
- Door times 10-33
- Drive type 10-26
- Dynamic parking 12-22
- Dynamic peak operation 12-13
- Emergency power 12-23
- Emergency power behavior 10-39
- Emergency power role 10-48
- Final jerk distance 10-24
- Final jerk rate 10-24
- Fire code 10-36
- Fire recall floor 10-37, 12-14
- Inspection speed 10-44
- Jerk rate 10-24
- Level tolerance 10-25
- Lobby door behavior 10-29, 10-47
- Lobby return floor 10-29
- Long wait priority 12-13
- Main contactor hold time 10-44
- Medical recall 10-41, 12-17
- NTS decel rate 10-60
- Overspeed 10-26
- Parking floors 12-21
- Password 12-30
- Password protection 10-62
- Pattern delay 10-27
- Pretorque 9-4, 10-58
- Relevel forcing 10-25
- Response time 10-24
- Retiring cam 10-44
- Security code 12-29
- Security code timeout 10-43
- Seismic behavior 10-42
- Smoke detector inputs 10-38
- Soft lockouts 12-28

Short run curve determination 10-23
Show car status on CE display? 10-45
Shuttle Floor1
10-47
Shuttle Floor2
10-47
Sin/Cos 6-12
Single wire car call wiring 3-14
Smoothing tape edges 2-9
Software revision level 3-8
Special attendant w/ annunciator oper? 10-47
Speed (fpm) Relevel 10-22
Speed curves 10-23
Speed feedback signal 2-7
Speed Reduce Factor 99% Max Speed 10-39
SR_MON Fault 3-5, 10-19
Stall Timeout 12-14
Start/End Code button 12-29
Steel tape 2-9, 3-16
Stick alignment 2-10
Stop at floor 00 in down dir? 10-44
Stop at floor 00 in up dir? 10-43

T

TAC_MON Fault 3-5, 10-19
Tach generator wiring 2-8
Tape cleaning 2-9
Tape tension 2-9
Terminal Slowdown Learn 10-61
Terminal slowdown position 8-4
Terminal slowdown switches 8-2
This Bank # 10-39
This Bank Num 12-27
Time between ATT buzzer rings (sec) 10-31
Torqmax Display 6-7
Torqmax F5 drive 6-6
Total Num of Banks 12-27
TR status 10-3
TRIP - Door Zone Overspeed 8-10
TRIP - ETS DN 8-10
TRIP - ETS UP 8-10
TRIP - Inspection Overspeed 8-10
TRIP - Tach Fault 8-10
TRIP- Slowdown Error 8-10
Turn Car Off Med Ph 2 at Rec Floor Only? 10-42

U

Unintended Movement 3-11
Up Pk and Dn Pk 12-13
UPG/DNG on for last term. car calls? 10-29
Using access codes 12-29

V

Verify encoder type 6-12
Viewing events 10-18
VIP Service Enabled? 10-40
VIP/Car Riser Med Phase 1 Dr Time (sec) 10-41
VIP/Medical Phase 2 Door Time (0.1 sec) 10-41

W

Warnings 1-6
WTD 12-3

Z

Zone to Fully Locked Floors? 12-20
Zoning Retardation (seconds) 12-20