Motion Control Engineering, Inc.
11380 White Rock Road
Rancho Cordova, CA 95742

voice 916 463 9200
fax 916 463 9201
www.mceinc.com

Specifications,
Elevator Products (2000 - 2010)
(For Reference Only)

Manual # 42-01-SPECS, Rev B4, April 2017

Copyright

Copyright 2017, Motion Control Engineering. All Rights Reserved.
This document may not be reproduced, electronically or mechanically, in whole or in part, without written permission from Motion Control Engineering.

Trademarks

All trademarks or registered product names appearing in this document are the exclusive property of the respective owners.

Warning and Disclaimer

Although every effort has been made to make this document as complete and accurate as possible, Motion Control Engineering and the document authors, publishers, distributors, and representatives have neither liability nor responsibility for any loss or damage arising from information contained in this document or from informational errors or omissions. Information contained in this document shall not be deemed to constitute a commitment to provide service, equipment, or software by Motion Control Engineering or the document authors, publishers, distributors, or representatives.

Limited Warranty

Motion Control Engineering (manufacturer) warrants its products for a period of 15 months from the date of shipment from its factory to be free from defects in workmanship and materials. Any defect appearing more than 15 months from the date of shipment from the factory shall be deemed to be due to ordinary wear and tear. Manufacturer, however, assumes no risk or liability for results of the use of the products purchased from it, including, but without limiting the generality of the forgoing: (1) The use in combination with any electrical or electronic components, circuits, systems, assemblies or any other material or equipment (2) Unsuitability of this product for use in any circuit, assembly or environment. Purchasers' rights under this warranty shall consist solely of requiring the manufacturer to repair, or in manufacturer's sole discretion, replace free of charge, F.O.B. factory, any defective items received at said factory within the said 15 months and determined by manufacturer to be defective. The giving of or failure to give any advice or recommendation by manufacturer shall not constitute any warranty by or impose any liability upon the manufacturer. This warranty constitutes the sole and exclusive remedy of the purchaser and the exclusive liability of the manufacturer, AND IN LIEU OF ANY AND ALL OTHER WARRANTIES, EXPRESSED, IMPLIED, OR STATUTORY AS TO MERCHANTABILITY, FITNESS, FOR PURPOSE SOLD, DESCRIPTION, QUALITY PRODUCTIVENESS OR ANY OTHER MATTER. In no event will the manufacturer be liable for special or consequential damages or for delay in performance of this warranty.

Products that are not manufactured by MCE (such as drives, CRT's, modems, printers, etc.) are not covered under the above warranty terms. MCE, however, extends the same warranty terms that the original manufacturer of such equipment provide with their product (refer to the warranty terms for such products in their respective manual).

In This Manual:

Ongoing research and development have enabled MCE to produce the elevator industry's most comprehensive line of elevator control products. This diversified product line, coupled with the rapid rate of change in microcomputer technology, has created the need for a vehicle to communicate these changes to the decision makers of our industry.

The purpose of this Specifications guide is to keep elevator Consultants, Contractors, and Building Owner/Managers up to date on the latest product developments and features available from MCE. Please visit us at www.mceinc.com for the latest information on new products as they are released.

When viewed online as a pdf file, Specifications manual hyperlinks link to related topics and informational websites. Hyperlinked text is blue. The manual includes:

- Contents: Table of Contents. When viewed online as a pdf file, hyperlinks in the Contents link to the associated topic in the body of the manual.
- Section 1. Using Specifications. How to use the Specifications manual, CD-ROM, and MCE Services.
- Section 2. General Specifications. Specifications common to most MCE equipment.
- Section 3. Traction Elevator Controllers, IMC.
- Section 4. Traction Elevator Controllers, PTC, VVMC, VFMC.
- Section 5. Hydraulic Controllers, PHC, HS
- Section 6. Intelligent Overlay System
- Section 7. M3 Group System
- Section 8. Machines and Motors
- Section 9. Controller Options
- Section 10. SmartLINK Serial Communication
- Section 11. LS Landing Systems
- Section 12. TLS Terminal Limit Switches
- Section 13. Load Weighers
- Section 14. CMS Central Monitoring System
- Section 15. Elevator Security
- Section 16. Physical Specifications
- Section 17. Technical Publications

MCE Philosophy

We developed MCE third-party, universally maintainable control equipment based on a simple premise: Elevator service contractors should be selected and retained based on customer satisfaction, not access to a service tool.

MCE imposes no restraints on the ability to service and maintain our elevator control systems. All MCE products are non-proprietary.

As such, parts are available for inventory (not just exchange). Diagnostics are built in. No proprietary service tool is required for any adjustment or maintenance procedure. All manuals and drawings are provided. Technical training, engineering, and technical support are available to all. MCE provides direct support to the "end user" and their designated maintenance company.

MCE Direction

We strive to bring together the right people and technology to continually improve elevator performance, while ever simplifying installation, maintenance, and operation. We design, manufacture, and provide the most advanced elevator control systems along with unprecedented levels of customer service, support, and commitment.

Updates and Copies

MCE Specifications are updated periodically to reflect the latest technological developments and products. If you are not sure whether the copy you have is current, please call MCE and we will ensure you receive the most recent edition. If you would like a copy of the Specifications on CD-ROM, please call.

OEM Products

MCE products carrying MCE identification labels do not have proprietary diagnostics. MCE may manufacture products for the OEM (Original Equipment Manufacturer) market that do not carry MCE identification labels and may have proprietary diagnostics owned by the elevator manufacturer. Any of the statements below can be used to ensure that non-proprietary diagnostics are furnished regardless of the elevator manufacturer:

- Provide MCE non-proprietary diagnostics.
- Provide non-proprietary diagnostics by MCE.
- Provide non-proprietary diagnostics.

Product Selection

MCE makes no final recommendation as to the suitability of its products for any specific application. It is the responsibility of the elevator consultant, contractor, or end user to determine which product is best suited for each particular project.

Section 1. How to use Specifications

MCE Specification Toolset **1-1**

Using the Manual **1-2**

Performance Requirements 1-2
Locate Supporting Information 1-2
Cut and Paste 1-2

MCE Services **1-3**

Factory Technical Training 1-3
Technical Training at Your Site 1-4
Job Site Survey 1-4
Field Adjustment Training 1-4
Project Completion Audit 1-5
Telephone Hotline Support 1-5
Field Troubleshooting Support 1-5
Field Modifications 1-5
Original Parts/Packages Discounts 1-6
Premier Support Plan 1-6

Performance Requirements **1-7**

Section 2. General Specifications

General Specifications **2-1**

In This Section **2-1**

Code Compliance **2-2**

ADA Requirements **2-3**

Environmental Considerations **2-3**

Diagnostics **2-3**

Intended Operation of Critical Components **2-3**

Status Indicators **2-4**

Out of Service Timer **2-4**

Door Operation **2-4**

Door Pre-opening 2-4
Car and Hall Call Registration 2-4
Fire Service Operation 2-5
Independent Service 2-5
Simplex Selective Collective Operation 2-5
Simplex Home Landing Operation 2-5
Duplex Operation 2-5
Number of Stops 2-5
Leveling 2-5
Test Switch 2-6
Relay Panel Inspection 2-6
Uncanceled Call Bypass 2-6
Anti-nuisance (Photo Eye) 2-6
On-board Diagnostics 2-6
Optional Peripherals 2-6

Section 3. Traction Elevator Controllers, IMC

Traction Elevator Controllers, IMC 3-1
In This Section 3-1
IMC Recommended Use 3-2
IMC Performa/System 12 SCR Drive Recommended Use 3-4
IMC-SCR/System 12 SCR Drive Recommended Use 3-7
IMC-AC/Flux Vector Drive Recommended Use 3-8
IMC-MG/Generator Field Control Recommended Use 3-9

Section 4. Traction Controllers, PTC, VVMC, VFMC

General 4-1
In This Section 4-1
Model PTC Recommended Use 4-2
PTC-SCR Recommended Use 4-3
PTC-AC Series M Recommended Use 4-4
PTC-MG Recommended Use 4-6
VVMC-1000 SCR Recommended Use 4-9
VFMC-1000 AC Recommended Use 4-9
VVMC-1000 MG Recommended Use 4-10

Section 5. Hydraulic Controllers, PHC, HS

General 5-1
In This Section 5-1
PHC Recommended Use 5-2
HS Recommended Use 5-5

Section 6. Intelligent Overlay System

General 6-1
In This Section 6-2
System Hardware 6-2
Group Cabinet Signals 6-2
Overlay Interface Cabinet Inputs 6-3
Overlay Interface Cabinet Outputs 6-4

Section 7. M3 Group System

General 7-1
In This Section 7-1
M3 Group System Specifications 7-2

Section 8. Machines and Motors

General 8-1
In This Section 8-1
DC Gearless Machines 8-2
AC Gearless Machines 8-2
DC Hoist Motors 8-2
AC Hoist Motors 8-2
Motor Generator Sets 8-3
AC Hydraulic Motors 8-3

Section 9. Controller Options

General 9-1
In This Section 9-1
Attendant Service Operation 9-3
Binary Position Indicator Outputs 9-3
Call/Send Operation 9-3
CRT/Keyboard 9-4
Down Collective 9-4
Dumbwaiter Ejector Control 9-4
Dumbwaiter Queuing Control 9-4
Earthquake Operation 9-5
Emergency Power 9-5
Hospital Emergency 9-5
Integral Voice Annunciation 9-6
Keyboard Control 9-6
Load Weighing Anti-Nuisance 9-6
Load Weighing Dispatch 9-6
Load Weighing Hall Call Bypass 9-6
Load Weighing Overload 9-6
Load Weighing Pre-Torquing 9-7
Manual Doors 9-7
Monitoring with CMS 9-7
Monitoring from Remote Locations 9-7
Motor Generator Shutdown Switch 9-7
On-Board Diagnostics 9-7
Power Freight Door Control 9-7
Rear Doors (Staggered/Independent) 9-8
Rear Doors (Walk-Through/Independent) 9-8
Security 9-8
Serial Communication Car Operating Panel 9-8
Serial Communication Hall Fixtures 9-8
Serial Position Indicator Driver 9-8
Single Automatic Pushbutton 9-8
Single Button Collective 9-8
Swing Car Operation 9-9
Custom Software 9-9

Section 10. SmartLINK Serial Communication

General 10-1
In This Section 10-1
SmartLINK for Car Operating Panels 10-2
SmartLINK for Hall Fixtures 10-2

Section 11. LS Landing Systems

General 11-1
In This Section 11-1
LS-STAN, Vane-actuated VS-1 Proximity Switch 11-2
LS-QUTE, Steel Tape and Magnetic Strips 11-3
LS-QUAD-2 for IMC 11-3
LS-QUIK for IMC 11-4

Section 12. TLS Terminal Limit Switches

General 12-1
In This Section 12-1
TLS-C Recommended Use 12-2
TLS-1 Recommended Use 12-2
TLS-2 Recommended Use 12-3

Section 13. Load Weighers

General 13-1
In This Section 13-1
Isolated Platform 13-2
Crosshead Deflection 13-2

Section 14. CMS Central Monitoring System

General 14-1
In This Section 14-1
CMS Central Monitoring System for Windows® 14-2
CMS General Specifications 14-2
CMS Hardware 14-3
Elevator Command Center Computer - Minimum requirements for CMS 14-3
CMS Connection Media Options 14-3
CMS Functional Specifications 14-4
CMS Reports 14-6

Relational Database 14-8
Embedded Monitoring Interface (EMI) 14-8
Communication Network 14-8
SIS, Security Interface Software 14-8

Section 15. Elevator Security

General 15-1
In This Section 15-1
Basic Security 15-2
Basic Security with CRT 15-2
Access Control for Elevators 15-3
System Access Control 15-3
Levels of Access Control 15-3
Hall Call Control 15-3
Car Call Control 15-4
Access Control Resolution 15-4
Access Control Programming 15-4
Car Station Keypad 15-4
Passenger Access Control 15-4
Floor Access Control 15-5
User Interface 15-5
Report Generation 15-5
Software Switch 15-5
Security Interface System 15-6
Additional Security Options 15-6

Section 16. Physical Specifications

General 16-1
In This Section 16-1
Standard Controller Enclosures 16-2
Hydraulic Enclosures 16-2
Traction Enclosure (Series M) 16-4
Traction Enclosure (Single Door) 16-5
Traction Enclosures (Double Door) 16-6
Group Enclosure 16-8
Off-the-Shelf Enclosures 16-9
NEMA 1 16-9
NEMA 4 16-9
NEMA 4X 16-11
NEMA 12 16-12
Group Dispatcher (IOS) Overlay Enclosure 16-13
Filter Enclosures 16-13

Landing System Physical Specifications 16-15
LS-STAN Specifications 16-15
Sensor 16-15
Power Supply 16-15
Enclosure 16-15
Vane Assembly 16-15
LS-QUAD-2 Specifications 16-17
Magnetic Sensor 16-17
Enclosure 16-17
Encoder 16-18
Tape 16-18
Tape Mounting 16-18
LS-QUTE Specifications 16-19
Magnetic Sensor 16-19
Enclosure 16-19
Tape 16-19
Tape Mounting 16-19
LS-QUIK Specifications 16-20
Sensor 16-20
Enclosure 16-20
Encoder 16-21
LS-QUIK Vane 16-22

Isolated Platform Load Weigher 16-23

TLS Terminal Limit Switches 16-27

Section 17. Technical Publications

In This Section 17-1

Drive System Considerations 17-2
Purpose 17-2
Overview 17-2
Communication is Vital 17-2
Drive Technology 17-3
Conclusion 17-4

Static Drives vs. Motor Generators 17-5
Purpose 17-5
Overview 17-5
Introduction 17-5
Power Consumption 17-6
Maintainability 17-6
Marginally Sized Emergency Generators 17-6
Emergency Generators Sensitive to Harmonics 17-7
Emergency Generators Sensitive to Power Factor 17-7
Shared Power Distribution Systems 17-7
Marginal AC Power Distribution 17-7
AC Line Current Magnitude Graphs for Motor Generator vs. SCR 17-8
Current Requirements for SCR Drives 17-8
Gearless Machines 17-9

Conclusion 17-9

AC Motor Controls for Elevators 17-11

Purpose 17-11
Overview 17-11
Motor Reuse or Replacement 17-12
Geared Applications – selection is job dependent: 17-12
Most Gearless Applications – DC is still the best choice 17-13
Retaining an Existing AC Motor 17-13
Slip Requirements 17-13
Calculating Slip 17-14
Slip Requirements for New Motors 17-14
Using a New AC Motor 17-15
When Buying a New Machine and Motor... 17-15
Verify Correct Slip: 17-15
Insulation 17-16
When Buying a New Motor and Using an Existing Machine... 17-16
Motor Drive Packages 17-16
Input Line Impedance 17-16
RFI/EMI Demons: The Need for Proper Grounding 17-17
How to Reduce the Effect of RFI and EMI: 17-17
Grounding 17-17
Wiring the Controller 17-19
Proper Layout 17-19
RFI Filters 17-19
Drive Isolation Transformers 17-19
Marginally Sized Emergency Power Generators 17-19
Emergency Power Checklist 17-20
Emergency Generator Sensitivity to Harmonics 17-20
Emergency Generator Tolerance for Regenerated Power 17-20
AC vs DC SCR Drive Efficiency 17-20
Hidden Costs 17-21
Performance 17-21
Heat Generation 17-22
Non-Regenerative AC Drives 17-22
Regenerative AC Drives 17-22
Summary 17-22

Harmonic Analysis and Comparison 17-23

Purpose 17-23
Elevator Test Tower Research Overview 17-23
Tested Drives 17-23
Testing Methodology 17-24
General comments regarding the tests:. 17-24
Drive Characteristics 17-24
Evaluating the Tables 17-25
Evaluating the Data 17-26
Yaskawa Flux Vector VFAC Drive 17-26
Conventional 6-Pulse DC SCR Drive 17-26
12-Pulse DC SCR Drive (MCE System 12). 17-27
Conclusion 17-28

Yaskawa Flux Vector VFAC Drive 17-29
Yaskawa Flux Vector VFAC Drive 17-30
Conventional 6-Pulse DC SCR Drive 17-31
Conventional 6-Pulse DC SCR Drive 17-32
12-Pulse SCR Drive (MCE System 12) 17-33
12-Pulse DC SCR Drive (MCE SYSTEM 12) 17-34
Supplemental Job Site Analysis 17-35
Purpose 17-35
Tested Drives 17-35
Testing Methodology 17-35
Evaluating the Data 17-35
Conventional 6-Pulse DC SCR Drive - International Towers Building 17-35
12-Pulse DC SCR Drive - Plaza Building 17-35
6-pulse DC SCR drive. 17-36
Conclusion 17-36
Conventional 6-Pulse DC SCR Drive 17-37
Conventional 6-Pulse DC SCR Drive 17-38
12-Pulse SCR Drive (MCE System 12) 17-39
12-Pulse DC SCR Drive (MCE System 12). 17-40

AC Inverter Drives Electrical Noise & RFI 17-41
Purpose 17-41
Overview 17-41
Static Drives 17-41
Radio Frequency Interference “RFI” 17-41
IGBTs 17-42
Reducing/Preventing Electrical Noise 17-43
Warnings from Manufacturers 17-43
MCE. 17-43
SAFTRONICS 17-43
Conclusion 17-44

Elevator Modernization Performance Charts 17-45
Purpose 17-45
Overview 17-45

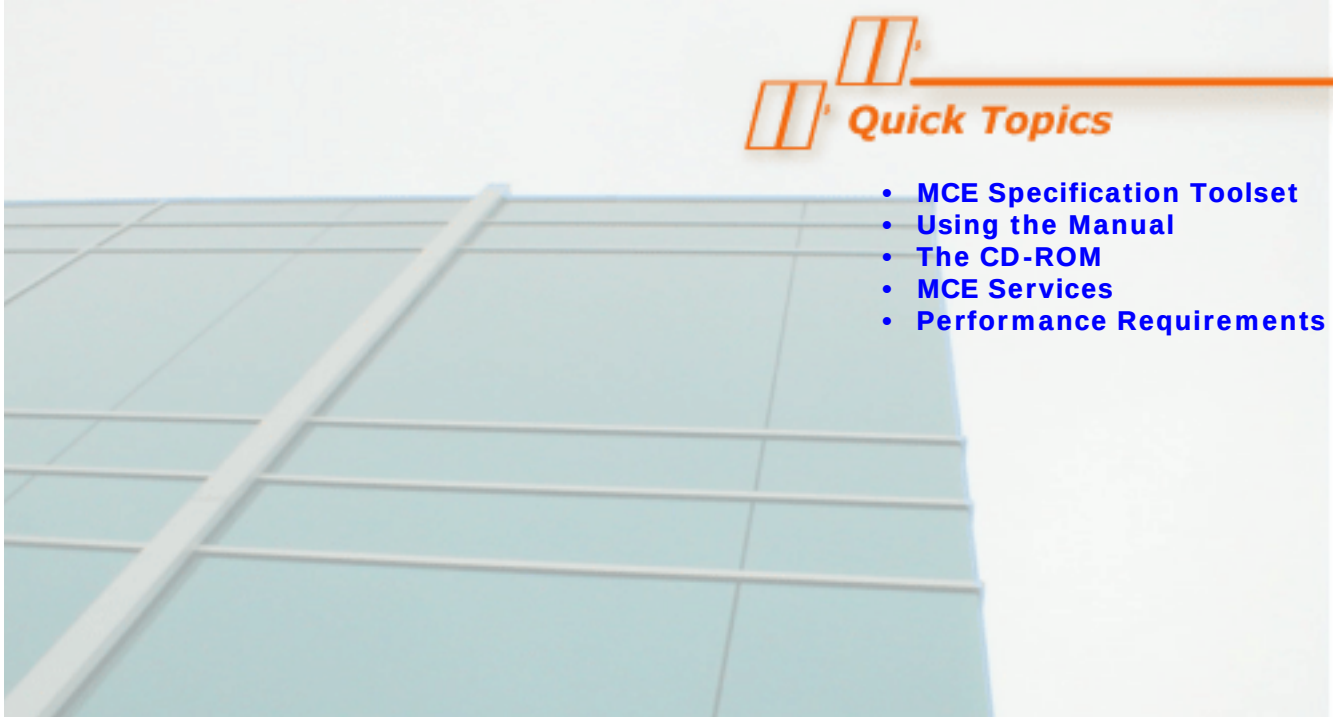

How to use Specifications

1

MCE Specification Toolset

The specification toolset includes this manual and MCE Services.

- Specifications Manual: The manual provides a reference tool, guiding you through selecting equipment to meet job requirements.
- MCE Services: The second component of your specification toolset is your partnership with Motion Control Engineering. MCE professionals are available to answer technical questions, provide supporting information, even to provide hands-on assistance when developing specifications or quotations for extensive, multi-car, modernizations or new installations.

Using the Manual

The manual is organized so that you can quickly:

1. Identify equipment sets to meet specific performance requirements.
2. Immediately locate supporting information about specific components.
3. Copy or "cut and paste" supporting text into your job specification. (Text intended to be inserted in a specification document is identified by a red "Specification Text" heading.)

Performance Requirements

The charts at the end of this section let you quickly identify specific equipment sets depending upon job performance requirements including:

- Maximum required car speed
- Required motor drive type
- Analog or Digital drive control
- Motor control implementation
- Maximum number of stops
- Car Control Groups
- Landing system choices
- Load weighing choices
- Load pre-torque availability
- Door operator choices
- Hoistway switch support
- Hall call support
- Annunciator/Indicator support
- Security support
- Central monitoring support

Locate Supporting Information

Supporting information for equipment listed in the performance charts is provided according to category in the body of the manual. Where practical, the chart will provide specific page or section references. If you are reading the manual on-line (pdf format), blue text or blue page numbers are active links you can click on to immediately jump to the referenced information.

Cut and Paste

When viewing the specifications manual in Adobe Reader, just select the Text Select tool or the Formatted Text Tool and drag through any text you want to copy. With the text selected, pick Copy from the Edit menu, or use the Control and C keys, or right-click and select Copy. Then, open your specification and paste the copied text into your document.

MCE Services

MCE Services is our name for the supporting relationship and services that add really tremendous value to choosing MCE equipment for your jobs. MCE Services are your key to MCE expertise. If you need specific support or information you don't see described here, please call and let us know. We are constantly looking for ways to improve our partnership with you.

- Factory technical training at MCE
- Technical training at customer sites
- Job site surveys
- Field adjustment support and/or training
- Project completion audits
- Telephone hotline support
- Field troubleshooting support
- Field modifications
- Original Parts packages and discounts
- Premier Support Plan

Factory Technical Training

Factory Technical Training classes provide better working knowledge of installation, operation, and maintenance practices for MCE controls. Factory Technical Training has a long history at MCE and past attendees report that classes reduce installation, adjustment, and troubleshooting time on the very next job.

Call your MCE sales representative or call us at (916) 463-9200 and ask for MCE Services to receive a program summary by email or fax including upcoming class dates and a registration form.

Technical Training at Your Site

Your city or job site might be the most economical choice for technical training, particularly for groups of four or more trainees. MCE will tailor a program to your individual needs — where key personnel are trained on the equipment they work with every day. Call (916) 463-9200 and ask for MCE Services to discuss fees, content, and scheduling options.

Job Site Survey

Job site survey assistance during the initial information gathering phase of a project can save significant, sometimes critical, time for contractors. Let the control engineers who need the data assist you in collecting the required information. Call your MCE sales representative or MCE Services directly at (916) 463 9200.

Specification Text

A job site survey shall be performed by MCE and shall include the preparation of a detailed job survey report, assistance with measurements, participation in meetings with consultant / contractor / building owner for clarification and coordination, verification that MCE equipment will meet project specifications, and coordination of equipment shipments to meet the installation schedule.

Field Adjustment Training

Field Adjustment Training significantly reduces the amount of time required to install and adjust a controller. Each day of field adjustment training can save several days of installation / adjustment time on the present job and provide skills for the future. Call your MCE sales representative or 916 / 463-9200 and ask for MCE Services for more information.

Specification Text

Field Adjustment Support / Training services shall be provided by MCE and shall include hands-on adjustment training, installation and adjustment coaching, advice and guidance for installation and an evaluation to identify and correct any controller-related installation problems.

Project Completion Audit

Utilize the skills of a factory trained technician to measure and evaluate the performance of every car. Includes review to eliminate the most common installation faults. Provides a performance yardstick for future projects. Ensures that the completed project delivers the optimum performance that MCE control equipment is capable of providing. Call your MCE sales representative or 916 / 463-9200 and ask for MCE Services for more information.

Specification Text

Field Adjustment Support / Training services shall be provided by MCE and shall include hands-on adjustment training, final adjustment coaching and tuning to MCE's high ride quality standards.

Telephone Hotline Support

Factory trained technicians are available to provide answers to installation, adjustment and troubleshooting questions. This is your resource for quickly identifying solutions to the most common problems. No need to struggle...call the experts. Call 916 / 463-9200 and ask for MCE Services for more information.

Specification Text

Telephone Hotline Support is provided at no cost for products under warranty. Beyond the warranty period, per-incident service charges apply. All Telephone Hotline Support issues are logged in the MCE computer system and every call is tracked until the problem is resolved. Extended service hours are available.

Field Troubleshooting Support

Field Troubleshooting Support can save many frustrating hours spent tracking and resolving difficult or elusive problems and is particularly valuable when unresolved field problems persist. Ensure quick resolution to current problems and become better equipped to resolve future issues more quickly. Call 916 / 463-9200 and ask for MCE Services to discuss scheduling options and fees.

Specification Text

Field Troubleshooting Support services shall be provided by MCE and shall include in-depth analysis by a factory-trained technician, troubleshooting and problem resolution, deployment of the manufacturer's full array of technical resources as required and a trouble-shooting clinic for contractors' field personnel.

Field Modifications

MCE software, hardware and R&D engineers will develop a custom modification to satisfy your unique needs. This service can be used to develop enhancements, obtain functions not originally specified or remedy unanticipated hardware or software issues. Call 916 / 463-9200 and ask for MCE's Field Modifications Team to discuss specific needs.

Original Parts / Packages Discounts

We've got your parts, whether you need a single replacement part or recommended spare parts package. Insist on genuine MCE parts. Discounts are available for volume purchases of replacement / spare parts, and special pricing applies to recommended spare parts packages. Call 916 / 463-9200 select Technical Support and then select Parts to discuss specific needs.

Premier Support Plan

Premier Support Plan bundles MCE's most requested services and provides them at substantial savings. Fees are based on the number of controllers in the portfolio, vintage of controllers, type of controlleres, Sales volume, Financial history and the level of support required (call volume).

Premier Support Plan includes portfolio-wide extended warranty for all MCE manufactured components and boards, preferred rates for MCE field services, preferred rates for custom engineering or software / hardware modifications, no charge drive exchange (System 12), no charge on expedited repair service for non-exchange drives and no charge freight back-to-you on MCE repair or exchange items.

Performance Requirements

To use this chart:

1. Choose the appropriate controller for your application.
2. Turn to the section specified in the selection chart under “Recommended Use” to verify that the selected controller is appropriate for the application. (If you are reading this on a computer, just click on blue text to jump immediately to that topic.)
3. Use the sections listed at the end of “Recommended Use” to compile the specification for your project. Product dimensions are located in Section 16, Physical Specifications.
4. If your traction project requires a group of elevators under dispatch control, refer to Section 7, M3 Group System for specifications.
5. Select features your project requires from Section 8, Optional Features for Controllers.
6. Refer to the Table of Contents to locate descriptions and specifications for other MCE products that may be required for your project.
7. Select and specify MCE Services for your project from this section.

Elevator Controller Technology Selection Charts				
Traction Elevator Controllers - IMC Intelligent Motion Control				
	IMC Performa	**IMC-SCR**	**IMC-AC**	**IMC-MG**
Maximum Car Speed	1800 fpm, 9.14 m/s	1800 fpm, 9.14 m/s	700 fpm, 3.565 m/s	1800 fpm, 9.14 m/s
Drive Type	System 12 SCR	System 12 SCR	Flux Vector	Motor Generator
Drive Control	Digital - IMC	Digital - IMC	Digital - IMC	Digital - IMC
Motor Control Technique	Distance & Velocity Feedback	Distance & Velocity Feedback	Distance & Velocity Feedback	Distance & Velocity Feedback
Maximum Number of Stops	64	64	64	64
Configuration	Simplex, M3 Group	Simplex, M3 Group	Simplex, M3 Group	Simplex, M3 Group
Landing Systems	LS-QUAD, LS-QUIK	LS-QUAD, LS-QUIK	LS-QUAD, LS-QUIK	LS-QUAD, LS-QUIK
Short Floor	Yes	Yes	Yes	Yes
Pre-Torquing	Yes	Yes	No	Yes
Recommended Use	Page 3-4	Page 3-7	Page 3-8	Page 3-9

Traction Elevator Controllers - PTC Programmable			
	PTC-SCR	**PTC-AC**	**PTC-MG**
Maximum Car Speed	350 fpm, 1.78 m/s	350 fpm, 1.78 m/s	350 fpm, 1.78 m/s
Drive Type	6 Pulse SCR	VVVF	Motor Generator
Drive Control	Analog	Analog/Digital	Analog
Motor Control Technique	Velocity Feedback	Open Loop or Velocity Feedback	Velocity Feedback
Maximum Number of Stops	32	32	32
Configuration	Simplex, Duplex	Simplex, Duplex	Simplex, Duplex
Landing Systems	LS-STAN, LS-QUTE	LS-STAN, LS-QUTE	LS-STAN, LS-QUTE
Short Floor	No	No	No
Pre-Torquing	No	No	No
Recommended Use	Page 4-3	Page 4-4	Page 4-6

Traction Elevator Controllers - VVMC / VFMC Group			
	VVMC-1000 SCR	**VFMC-1000 AC**	**VVMC-1000 MG**
Maximum Car Speed	350 fpm, 1.78 m/s	350 fpm, 1.78 m/s	350 fpm, 1.78 m/s
Drive Type	6 Pulse SCR	VVVF	Motor Generator
Drive Control	Analog	Analog/Digital	Analog
Motor Control Technique	Velocity Feedback	Open Loop or Velocity Feedback	Velocity Feedback
Maximum Number of Stops	64	64	64
Configuration	M3 Group	M3 Group	M3 Group
Landing Systems	LS-STAN, LS-QUTE	LS-STAN, LS-QUTE	LS-STAN, LS-QUTE
Short Floor	No	No	No
Pre-Torquing	No	No	No
Recommended Use	Page 4-9	Page 4-9	Page 4-10

Traction Elevator Controllers - Tricon	
	AC or DC
Maximum Car Speed	300 fpm, 1.5 m/s
Drive Type	AC VVVF or DC
Drive Control	Analog
Motor Control Technique	Open loop or Velocity Feedback
Maximum Number of Stops	32
Configuration	Tricon group
Landing Systems	SET 9000
Short Floor	No
Pre-Torquing	No
Recommended Use	

Hydraulic Elevator Controllers - PHC, HS		
	HMC-1000 PHC	**HMC-1000 HS**
Maximum Number of Stops	16	16
Configuration	Simplex, Duplex	M3 Group
Landing Systems	LS-STAN, LS-QUTE	LS-STAN, LS-QUTE
Recommended Use	Page 5-2	Page 5-5

Note

Complete specifications for MCE iControl are in a separate document (42-01-iSPECS), available in hard copy or on line at www.mceinc.com.

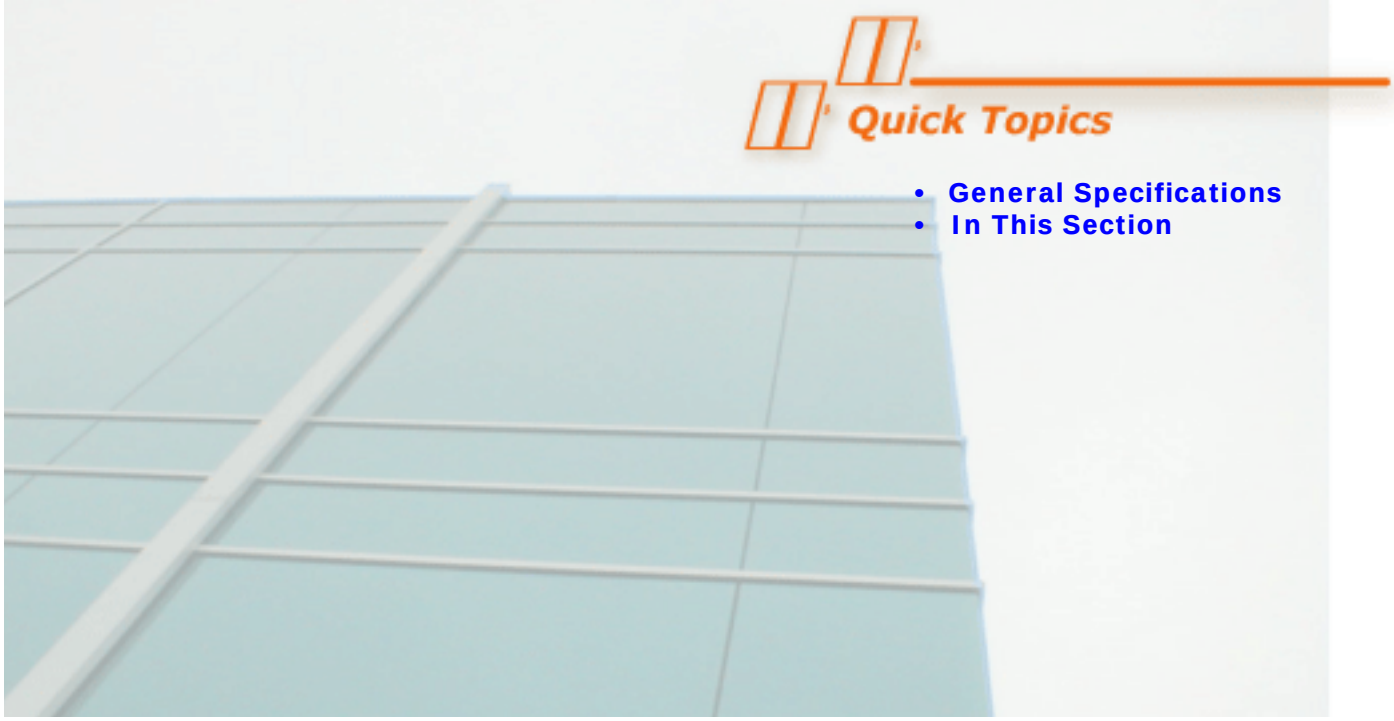

General Specifications

2

General Specifications

This section describes features common to most MCE control systems (iControl specifications published separately). Features unique to a certain type of control are in the specifications section unique to that control.

In This Section

- Code Compliance
- ADA Requirements
- Environmental Considerations
- Diagnostics
- Intended Operation of Critical Components
- Status Indicators
- Out of Service Timer
- Door Operation
- Door Pre-opening
- Car and Hall Call Registration
- Fire Service Operation
- Independent Service
- Simplex Selective Collective Operation
- Simplex Home Landing Operation
- Duplex Operation

- Number of Stops
- Leveling
- Test Switch
- Relay Panel Inspection
- Uncanceled Call Bypass
- Anti-nuisance (Photo Eye)
- On-board Diagnostics
- Optional Peripherals

Code Compliance

The elevator controller shall use a microprocessor based logic system and shall comply with all applicable elevator and electrical safety codes. Following is a partial list of codes with which MCE products comply.

For the United States:

- ANSI/ASME A17.1
- CAN/CSA-B44.1/ASME-A17.5
- NEC

For Canada:

- CAN/CSA-B44
- CAN/CSA-B44.1/ASME-A17.5
- CEC C22.1

For Australia:

- AS 1735

For the United Kingdom:

- BS 5655/EN 81

For IMC-SCR; IMC-AC; VVMC-1000; M3 GROUP:

- CE Label

ADA Requirements

The elevator controllers shall comply with Title III of the Americans with Disabilities Act (ADA).

Leveling Accuracy - The controller shall have a self-leveling feature that shall automatically bring the car to floor landings within a tolerance of 0.5" (12.7 mm) or better under all loading conditions up to the rated load.

Hall Lanterns - The controller shall have outputs to drive the visible and audible signals that are required at each hoistway entrance to indicate which elevator car is answering a call. Audible signals shall sound once for up, twice for down.

Car Position Indicators - The controller shall have a position indicator output to drive the required position indicator which shall indicate the corresponding floor numbers as the car passes or stops at a floor. An audible signal shall sound as the position indicator changes floors.

Optional - The controller shall have a voice annunciator output to announce direction and floor number.

Environmental Considerations

- Ambient temperature: 32F degrees to 104F degrees (0C degrees to 40C degrees). Higher temperature range compatibility is available.
- Humidity: non-condensing up to 95%
- Altitude: Up to 7500 feet (2286 m)

Motion Control Engineering specializes in control products for adverse environmental conditions. For example, dust-proof, water-proof, corrosion-resistant, explosion-proof, or air conditioned controller cabinets can be engineered to meet specific applications. Please contact MCE Sales Engineering for details.

Diagnostics

The control system shall provide comprehensive means of accessing the computer memory for elevator diagnostic purposes. It shall have permanent indicators for important elevator status conditions as an integral part of the controller.

Intended Operation of Critical Components

Failure of any single magnetically operated switch, contactor, or relay to release in the intended manner; the failure of any static control device, speed measuring circuit, or speed pattern generating circuit to operate as intended; the occurrence of a single accidental ground or short circuit shall not permit the car to start or run if any hoistway door or gate interlock is unlocked or if any hoistway door or car door or gate contact is not in the made position. Furthermore, while on car top inspection or hoistway access operation, failure of any single magnetically operated switch, contactor or relay to release in the intended manner, failure of any static control device to operate as intended or the occurrence of a single accidental ground, shall not permit the car to move even with the hoistway door locks and car door contacts in the closed or made position.

Status Indicators

Dedicated permanent status indicators shall be provided on the controller to indicate when the safety string is closed, when the door locks are made, when the elevator is operating at high speed, when the elevator is on independent service, when the elevator is on Inspection/Access, when the elevator is on fire service, when the elevator out of service timer has elapsed, and when the elevator has failed to successfully complete its intended movement. A means shall be provided to display other special or error conditions detected by the microprocessor.

Out of Service Timer

An out of service timer (T. O. S.) shall be provided to take the car out of service if the car is delayed in leaving the landing while calls exist in the system.

Door Operation

Door protection timers shall be provided for both opening and closing directions to protect the door motor and help prevent the car from getting stuck at a landing. The door open protection timer shall cease attempting to open the door after a predetermined time if the doors are prevented from reaching the open position. In the event that the door closing attempt fails to make up the door locks after a predetermined time, the door close protection timer shall reopen the doors for a short time. If, after a predetermined number of attempts, the doors cannot successfully be closed, the doors shall be opened and the car removed from service.

A minimum of four different door standing open times shall be provided. A car call time value shall predominate when only a car call is canceled. A hall call time value shall predominate whenever a hall call is canceled. In the event of a door reopen caused by the safety edge, photo eye, etc., a separate short door time value shall predominate. A separate door standing open time shall be available for lobby return.

Optional - If the doors are prevented from closing for longer than a predetermined time, door nudging operation shall cause the doors to move at slow speed in the closed direction. A buzzer shall sound during nudging operation.

Door Pre-opening

When selected, this option shall start to open the doors when the car is in final leveling, 3" (76.2 mm) from the floor. If pre-opening is not selected, the doors shall remain closed until the car is at the floor, at which time the doors shall commence opening.

Car and Hall Call Registration

Car and hall call registration and lamp acknowledgment shall be by means of a single wire per call, in addition to the ground and the power bus. Systems that register the call with one wire, and light the call acknowledgment lamp with a separate wire can be handled using relays.

Fire Service Operation

Fire Phase I emergency recall operation, alternate level Phase I emergency recall operation and Phase II emergency in-car operation shall be provided according to applicable local codes.

Independent Service

Independent service operation shall be provided in such a way that actuation of a key switch in the car operating panel will cancel any existing car calls, and hold the doors open at the landing. The car will then respond only to car calls. Car and hoistway doors will only close with constant pressure on a car call push-button or door close button. While on independent service, hall arrival lanterns or jamb mounted arrival lanterns shall be inoperative.

Simplex Selective Collective Operation

Simplex selective collective automatic operation shall be provided for all single car installations. Operation of one or more car or hall call pushbuttons shall cause the car to start and run automatically, provided the hoistway door interlocks and car door contacts are closed. The car shall stop at the first car or hall call set for the direction of travel. Stops shall be made in the order in which car or hall calls set for the direction of travel are reached, regardless of the order in which they were registered. If only hall calls set for the opposite direction of travel of the elevator exist ahead of the car, the car shall proceed to the most distant hall call, reverse direction, and start collecting the calls.

Simplex Home Landing Operation

Optional - If no calls are registered, this operation shall cause the car to travel to a predetermined home landing floor and stop without door operation. If the car is traveling to the home landing and a call appears from the opposite direction, the car shall slow down, stop, and then accelerate in the opposite direction, toward the call. The home landing function shall cease instantly upon the appearance of a normal call and the car shall proceed nonstop in response to any normal call.

Duplex Operation

Duplex operation is a configuration of series PHC and PTC control systems. Duplex configuration, with a computer for each controller, assigns cars on a real time basis using estimated time of arrival (ETA). Should one computer lose power or become inoperative in any way, the other computer shall be capable of accepting and answering all hall calls. When both computers are in operation, only one shall assume the role of dispatching the hall calls to both elevators.

Number of Stops

IMC, VVMC and VFMC traction controllers serve up to 64 landings; PTC traction controllers serve up to 32 landings; PHC and HS hydraulic controllers serve up to 16 landings.

Leveling

The car shall be equipped with two-way leveling to automatically bring the car level at any landing, within the required range of leveling accuracy, with any load up to full load.

Test Switch

A controller test switch shall be provided. In the test position, this switch shall allow independent operation of the elevator with the door open function deactivated for purposes of adjusting or testing the elevator. The elevator shall not respond to hall calls and shall not interfere with any other car in a duplex or group installation.

Relay Panel Inspection

A relay panel inspection switch and an up/down switch shall be provided in the controller to place the elevator on inspection operation and allow the user to move the car. Activation of the car top inspection switch shall render the relay panel inspection switch inoperative.

Uncanceled Call Bypass

A timer shall be provided to limit the amount of time a car is held at a floor due to a defective hall call or car call, including stuck pushbuttons. Call demand at another floor shall cause the car, after a predetermined time, to ignore the defective call and continue to provide service in the building.

Anti-nuisance (Photo Eye)

The controller shall cancel all remaining car calls, if a user-determined number of car calls are answered without the computer detecting a change in the photo eye input (indicating that no one is exiting the car).

On-board Diagnostics

The microprocessor boards shall be equipped with on-board diagnostics for ease of troubleshooting and field programmability of specific control variables. Field changes shall be stored permanently, using non-volatile memory. The microprocessor board shall provide the features listed below:

- On-board diagnostic switches and an alphanumeric display to provide user-friendly interaction between the mechanic and the controller.
- An on-board real time clock shall display the time and date and be adjustable by means of on-board switches.
- Field programmability of specific timer values (i.e., door times, MG shutdown time, etc.) may be viewed and/or altered through on-board switches and pushbuttons.

Optional Peripherals

Optional - As an integral part of the controller, the capability shall be provided to attach on-site or remote computer peripherals for additional adjustment or diagnostic capabilities.

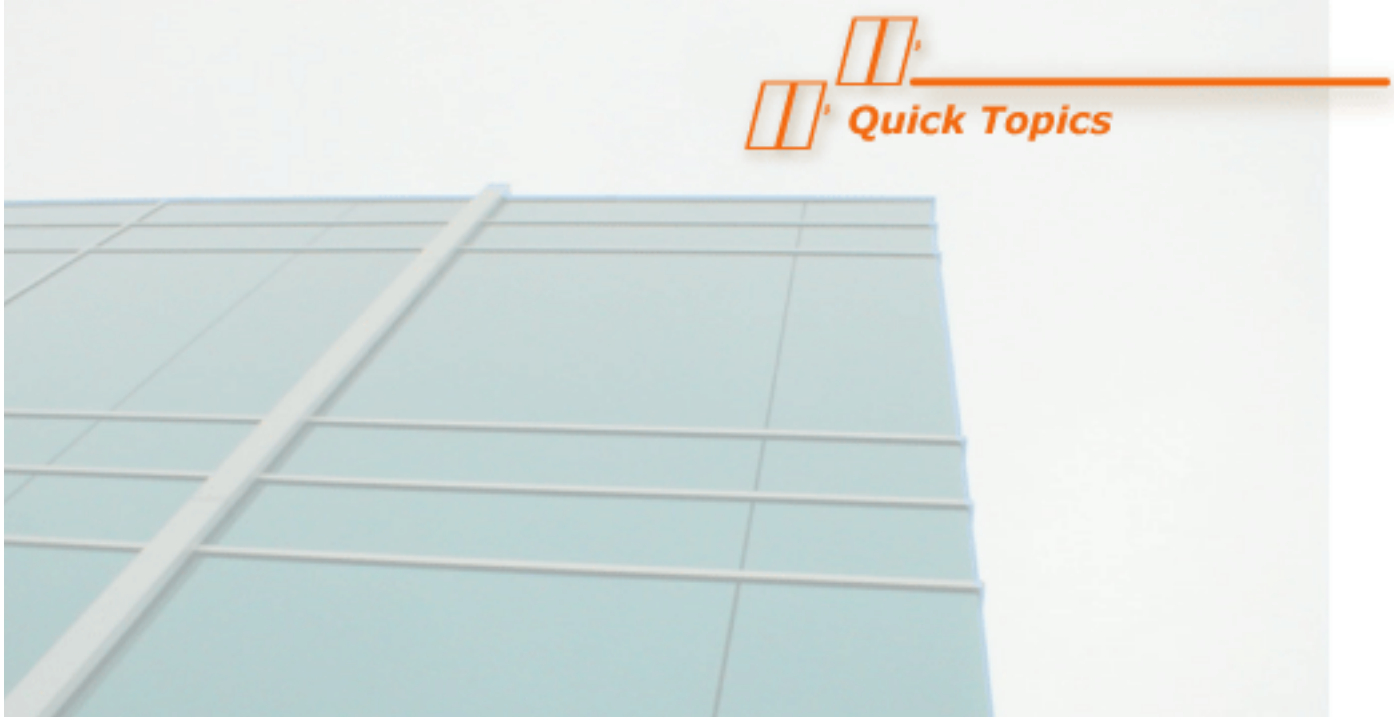

Traction Elevator Controllers, IMC

Traction Elevator Controllers, IMC

3

The systems described in this section provide premium performance for gearless or geared elevator installations. IMC Intelligent Motion Control is a fully digital system incorporating both distance and velocity feedback. Powerful processing algorithms eliminate the need for adjusting trimpots. All parameters are set and adjusted digitally and stored numerically using the system computer keyboard.

In most cases, replacing components does not require readjustment, simplifying system maintenance.

IMC controllers can be used with the System 12 SCR drive, AC Flux Vector drives, or Motor-Generators. IMC controls will operate as a Simplex or as part of an M3 Group of up to 12 cars serving up to 64 landings. Depending on project requirements, a consultant, contractor or building owner can choose which control system is appropriate for a specific application.

In This Section

- IMC Recommended Use
- IMC Performa/System 12 SCR Drive Recommended Use
- IMC-SCR/System 12 SCR Drive Recommended Use
- IMC-AC/Flux Vector Drive Recommended Use
- IMC-MG/Generator Field Control Recommended Use

IMC Recommended Use

IMC Intelligent Motion Control incorporates advanced digital elevator control technology. Highly integrated digital logic and motor control enable IMC to deliver premium performance for speeds to 1800 fpm (9.15 mps).

IMC controls continually create an idealized velocity profile. Exact car position and speed are tracked using a sophisticated distance and velocity feedback. By maintaining knowledge of exact car position, IMC controls are able to provide a high quality ride and the fastest possible floor-to-floor time. Continuous recalculation of idealized velocity makes IMC ideal for buildings with non-uniform or short floor heights. IMC groups use the M3 Group System.

Specification Text, IMC General

The microprocessor system shall be designed specifically for elevator applications and shall use multiple processors, at least one of which shall be a 32-bit high-performance RISC processor. Each elevator controller shall use at least four microprocessors in a multi-tasking/ multi-processing environment and have a capacity of 2 megabytes RAM, 2 megabytes EPROM, and 32 kilobytes of EEPROM.

The drive, microprocessor and controller shall be an integrated system designed for ease of use with diagnostics and parameter adjustments accessible through the same user interface.

The individual car controller shall have an independent safety processor that learns and monitors the velocity of the car near the terminal landings. Whenever the car encounters slowdown limit switches, actual car velocity shall be compared with the learned velocity. If an overspeed condition is detected, the car shall be forced to slow down and approach the terminal landing at reduced speed. The safety processor shall perform its velocity monitoring function independently of any other logic or motion control processors in the system.

A second independent safety processor shall be provided to monitor car velocity near the terminal landings and shall act as the emergency terminal speed (ETS) limiting device. The ETS monitor shall have an adjustable range that can be modified via software parameters. When an ETS overspeed is detected, the car shall come to an immediate stop, then resume movement at reduced speed to the terminal landing.

The brake supply shall be capable of providing at least four independently adjustable output voltage levels to provide smooth lifting, holding and releveling. These values shall be adjusted via computer parameters which control a solid-state brake supply. Adjustment of resistor values is not acceptable.

All power feed lines to the brake shall be opened by an electro-mechanical switch. A single ground, short circuit or solid-state control failure shall not prevent application of the brake.

The control system shall include circuitry to detect insufficient brake current. This failure shall cause the elevator to be removed from service at the next stop and remain out of service until the condition is corrected.

The individual car controller shall have a software program that uses mathematical methods to create an idealized velocity profile to minimize car travel time. All system motion parameters including jerk, acceleration and deceleration rates, and so forth, shall be field programmable with parametric limitations for system dynamics and shall be stored on an EEPROM in non-volatile memory.

The drive control system shall use an optimized velocity profile in a dual-loop feedback system based on car position and speed. A velocity feedback device (tachometer or encoder) shall permit continuous comparison of car speed with the calculated velocity profile to provide accurate control of acceleration and deceleration up to and including the final stop, regardless of direction of travel or load in the car. Drive subsystem control parameters shall be digitally adjustable through software and shall be stored on an EEPROM in non-volatile memory.

The system shall provide continuous monitoring of actual car speed and compare it with the intended speed signal to verify proper and safe operation of the elevator. Should actual speed vary from intended speed by more than a preset amount, the drive shall shut down the elevator and drop the brake.

A system shall be included for precise closed loop motor field control for DC applications. This system shall regulate motor field current throughout the range of operation via current feedback from the motor field. The system shall provide motor field current sensing which shall shut down the elevator if insufficient motor field current is detected.

The system shall provide adaptive gains for optimum control of the elevator throughout its travel.

The system shall use a device to establish incremental car position to an accuracy of 0.1875" (4.76 mm) or better, using a quadrature signal for the entire length of the hoistway.

Absolute floor number encoding with parity shall be provided at each floor in order for exact floor position to be read by the computer. The system shall not require movement to a terminal landing for the purpose of finding correct car position.

The automatic leveling zone shall not extend more than 12" (304.8 mm) above or below the landing level nor shall the doors begin to open until the car is within 12" (304.8 mm) of the landing. In addition, the inner leveling zone shall not extend more than 3" (76.2 mm) above or below the landing. The car shall not move if it stops outside the inner leveling zone unless the doors are fully closed and locked.

The system shall use an automatic two-way leveling device to control leveling of the car to within 0.25" (6.35 mm) or better above or below the landing sill. Overtravel, undertravel, or rope stretch must be compensated for and the car brought level to the landing.

The car controller shall include a minimum of one serial port for display terminal communication. The display terminal shall be used to view and alter individual car operating parameters such as jerk, acceleration, contract speed, deceleration and leveling. Remote configuration of individual car operating parameters shall be permitted when the car controller is attached to a CRT or PC via modem and an established protocol is followed.

A menu-driven CRT display shall provide motor field (where applicable), armature and brake voltages, armature current, intended and actual car velocities and hoist machine rpm.

A special events calendar shall record (depending on controller type) 250 or 500 noteworthy events or faults for a particular car. They shall be displayed in chronological order for examination or review. Data displayed shall include the type of event or fault, the date and time it occurred, and the position of the car and status of various flags at the time of the occurrence.

Optional - A system for pre-torquing the hoist motor (DC) shall be provided in order to ensure consistently smooth starts. An electronic load cell is required to implement the pre-torquing feature.

Optional - Two different landing systems are available, LS-QUAD or LS-QUIK. Refer to Section 11 for details.

Optional - Failure of the brake to lift as detected by a mechanical switch (if provided) shall cause the control system to remove the elevator from service at the next stop and remain out of service until the condition is corrected.

IMC Performa/System 12 SCR Drive Recommended Use

IMC PERFORMA offers top performance with faster, simplified adjustment for prestige projects with DC hoist motors. This control features the System 12 DC SCR drive using 12-pulse technology which inherently minimizes electrical and audible noise.

PERFORMA takes MCE 12-pulse technology to a new level. Sophisticated software simplifies system setup and operation. Interactive automation reduces motor field and brake calibration from hours to minutes. Imbedded coaching and context-based help make parameter adjustment intuitive.

Precise velocity control is achieved using advanced Digital Signal Processing (DSP) and MCE's sophisticated velocity control software algorithm.

New, more powerful PERFORMA microprocessors work in tandem with high-resolution digital components, using software optimization to provide tighter tracking and greater positioning and leveling accuracy.

IMC PERFORMA offers 12-pulse technology to the independent market; technology exclusively designed for elevator applications. This product is competitively priced despite its superiority to more common, conventional 6-pulse SCR drives.

IMC PERFORMA should be used when the reliability and maintenance-free characteristics of a DC SCR drive are desired; and where the lowest possible AC power line noise and disturbance is required. System 12 is the clear choice when limits are specified for AC power line harmonic distortion. System 12 also provides a superior power factor in comparison to conventional 6-pulse SCR drives.

Specification Text, IMC Performa with System 12 Drive

The control system shall use a 12-pulse SCR drive. The 12-pulse SCR drive shall be designed as an integral part of the control system providing access to and adjustment of all diagnostics and parameters for the entire elevator control system on a single monitor.

The controller shall provide precise velocity control using advanced Digital Signal Processing (DSP) technology. A high speed FPGA device shall be dedicated to encoder velocity processing.

The control system display diagnostics shall include on-line, context sensitive parameter descriptions and help information for fault troubleshooting.

The control system shall be capable of capturing six seconds of event-triggered, real time data for over 350 controller parameters. Data shall be recorded at 30ms intervals, and the system shall be capable of displaying both analog and digital values.

The control system shall provide auto-tuning of Motor Field and Brake control values.

The control system shall include dynamic braking to assist in bringing the car to a smooth, controlled emergency stop and to help limit car speed in the unlikely event of brake failure.

The control system motor field supply shall be current regulated and functionally integrated with the 12-pulse SCR drive in order to accomplish motor field forcing and armature voltage limiting.

A drive isolation transformer shall be provided as part of the control system to further reduce power line distortion and line notching. The transformer shall be matched to the characteristics of the 12-pulse SCR drive and elevator hoist motor.

Overcurrent protection shall be provided by a current limiting circuit with a threshold controlled by a computer system parameter.

Semiconductor fuses shall be provided for catastrophic overcurrent protection and to protect the SCRs from damage.

Heatsink over-temperature shall be monitored and, if an over-temperature condition occurs, the elevator shall be removed from service at the next available stop until the condition is corrected.

Speed regulation shall be +/- 1% or better, whether a tachometer or an encoder is used.

The system shall provide a commutation fault protection system to shut off current flow in the event of unexpected high current, which may occur during power regeneration back into the AC line combined with a sudden loss of AC power.

The drive shall not create excessive audible noise in the elevator motor.

The drive shall be a heavy-duty type, capable of delivering sufficient current to accelerate the elevator to contract speed with rated load. The drive shall provide speed regulation.

A contactor shall be used to disconnect the hoist motor from the output of the drive each time the elevator stops. This contactor shall be monitored and the elevator shall not be allowed to start again if the contactor has not returned to the de-energized position when the elevator stops.

All power feed lines to the brake shall be opened by an electro-mechanical switch. A single ground, short circuit or solid-state control failure shall not prevent application of the brake.

The controller shall provide stepless acceleration and deceleration and provide smooth operation at all speeds.

The controls shall be arranged to continuously monitor the performance of the elevator in such a way that if car speed exceeds 150 fpm during access, inspection, or leveling, the car shall shut down immediately, requiring a reset operation.

IMC-SCR/System 12 SCR Drive Recommended Use

IMC-SCR brings premium performance to elevators with DC hoist motors. This control features the System 12 DC SCR drive using 12-pulse technology, which inherently minimizes electrical and audible noise.

IMC-SCR offers 12-pulse technology to the independent market; technology exclusively designed for elevator applications. This product is competitively priced despite its superiority to more common, conventional 6-pulse SCR drives.

IMC-SCR should be used when the reliability and maintenance-free characteristics of a DC SCR drive are desired; and where the lowest possible AC power line noise and disturbance is required. System 12 is the clear choice when limits are specified for AC power line harmonic distortion. System 12 also provides a superior power factor when compared to conventional 6-pulse SCR drives.

Specification Text, IMC-SCR with System 12 Drive

The control system shall use a 12-pulse SCR drive. The 12-pulse SCR drive shall be an integral part of the control system providing access and adjustment of all diagnostics and parameters for the entire elevator control system on a single monitor.

The control system shall include dynamic braking to assist in bringing the car to a smooth, controlled stop during emergency stops and to help limit the car speed in the unlikely event of brake failure.

The control system motor field supply shall be current regulated and functionally integrated with the 12-pulse SCR drive in order to accomplish armature voltage limiting.

A drive isolation transformer shall be provided as part of the control system to further reduce power line distortion and line notching. This transformer shall be matched to the characteristics of the 12-pulse SCR drive and the elevator hoist motor.

Overcurrent protection shall be provided by a current limiting circuit with the threshold controlled by a computer system parameter.

Semiconductor fuses shall be provided for catastrophic overcurrent protection and to protect the SCRs from damage.

Heatsink over-temperature shall be monitored, and if an over-temperature condition occurs, the elevator shall be removed from service at the next stop until the condition is corrected.

Speed regulation shall be +/- 1% or better whether a tachometer or an encoder is used.

The system shall provide a commutation fault protection system to shut off current flow in the event of unexpected high current, which may occur during power regeneration back into the AC line combined with a sudden loss of AC power.

IMC-AC/Flux Vector Drive Recommended Use

IMC-AC with Flux Vector, field oriented technology brings premium performance to elevators using AC hoist motors. The AC drive is integrated with the IMC controller, providing 32-bit processing for smooth pattern generation for any application, including short floors.

The regenerative IMC-AC model is ideal for higher speeds and gearless applications. Use the non-regenerative model for geared applications to 450 fpm. The flux vector drive is capable of producing full torque at zero speed. IMC-AC provides the highest ride quality and the best performance time when used in conjunction with an AC motor with a slip specification of 5% or less or a NEMA rating of “A” or “B.”

Specification Text, IMC-AC with Flux Vector Drive

The flux vector drive shall be capable of producing full torque at zero speed and shall not require DC injection braking in order to control the stopping of the car.

The drive shall use a three-phase, full-wave bridge rectifier and capacitor bank to provide a DC voltage bus for the solid-state inverter.

The drive shall use power semiconductor devices and pulse width modulation, with a carrier frequency of not less than 2 kHz, to synthesize the three-phase, variable voltage, variable frequency output to operate the hoist motor in an essentially synchronous mode.

The drive shall have the capability of being adjusted or programmed to achieve the required motor voltage, current and frequency, in order to properly match the characteristics of the AC elevator hoist motor.

The drive shall not create excessive audible noise in the elevator motor.

The drive shall be a heavy-duty type, capable of delivering sufficient current to accelerate the elevator to contract speed with rated load. The drive shall provide speed regulation appropriate to the motor type.

For non-regenerative drives, a means shall be provided for removing regenerated power from the drive DC power supply during dynamic braking. This power shall be dissipated in a resistor bank, which is an integral part of the controller. Failure of the system to remove the regenerated power shall cause the drive output to be removed from the hoist motor.

A contactor shall be used to disconnect the hoist motor from the output of the drive unit each time the elevator stops. This contactor shall be monitored and the elevator shall not start again if the contactor has not returned to the de-energized position when the elevator stops.

All power feed lines to the brake shall be opened by an electro-mechanical switch. A single ground, short circuit or solid-state control failure shall not prevent application of the brake.

The controller shall provide stepless acceleration and deceleration and smooth operation at all speeds.

The power control shall be arranged to continuously monitor the performance of the elevator in such a way that if car speed exceeds 150 fpm during access, inspection, or leveling, the car shall shut down immediately, requiring a reset operation.

IMC-MG/Generator Field Control Recommended Use

IMC-MG is recommended for premium performance when a motor generator is used to operate a DC hoist motor. The drive, microprocessor and controller are combined into one fully integrated system. Sophisticated solid state IGBT devices are used to control the generator shunt field supply for maximum responsiveness and exceptional performance.

Specification Text, IMC-MG with Generator Field Control

The power control shall have the capability to drive the generator field, positive or negative, to the degree required to maintain regulation under varying loads.

The main monitor screen shall display the generator shunt field voltage.

The generator shunt field supply shall use IGBTs in a current controlled loop for maximum response.

Traction Controllers, PTC, VVMC, VFMC

General

Systems described in this section can be used for geared traction elevators with DC or AC motors at speeds up to 350 fpm in simplex, duplex, or group system configurations.

PTC Programmable Traction Control provides low cost, easily programmable elevator controls for simplex or duplex applications. Combined digital/analog technology and closed loop (CL) velocity feedback deliver superior performance to 350fpm (1.78 m/s). PTC for AC applications at speeds below 150fpm (0.76m/s) uses an open loop (OL) configuration.

Standard VVMC-1000 or VFMC-1000 controls, dispatched by an M3 Group System, allow group configurations with 64 landings and as many as 12 cars.

Depending on project requirements, a consultant, contractor or building owner can choose which control system is appropriate for a specific application.

In This Section

- PTC Recommended Use
- PTC-SCR Recommended Use
- PTC-AC Series M Recommended Use
- PTC-MG Recommended Use
- VVMC-1000 SCR Recommended Use
- VFMC-1000 AC Recommended Use
- VVMC-1000 MG Recommended Use

Model PTC Recommended Use

These products can use SCR drives, VVVF drives, Flux Vector drives, or Motor- Generator shunt field control. PTC controllers are identified as either DC or AC systems. PTC, using proven solid state devices, provides “stepless” acceleration and deceleration for smooth elevator operation while significantly improving elevator service for most low-rise to mid-rise buildings. Use PTC for simplex or duplex applications with up to 32 landings where low cost and ease of field programmability are desired.

For DC geared applications to 350 fpm (1.78 m/s), where contract speed can be reached on a two floor run, use closed loop (CL) configuration with either SCR drive or MG drive.

For AC geared applications to 150 fpm (0.76 m/s), use open loop (OL) configuration with VVVF drive; for speeds over 150 fpm (0.76 m/s), use closed loop (CL) configuration with Flux Vector drive.

PTC uses discrete and fixed slowdown distances and is not recommended for buildings with short floors or buildings with substantial variation in floor heights. Consult MCE Sales Engineers for floor height limitations.

Specification Text, General, PTC, VVMC, VFMC

All power feed lines to the brake shall be opened by an electro-mechanical switch. A single ground, short circuit or solid-state control failure shall not prevent application of the brake.

The automatic leveling zone shall not extend more than 6" (152.4 mm) above or below the landing level, nor shall the doors begin to open until the car is within 6" (152.4 mm) of the landing. In addition, the inner leveling zone shall not extend more than 3" (76.2 mm) above or below the landing. The car shall not move if it stops outside the inner leveling zone unless the doors are fully closed and locked.

The system shall use an automatic two-way leveling device to control the leveling of the car to within 0.25" (6.35 mm) or better above or below the landing sill. Overtravel, undertravel or rope stretch must be compensated for and the car brought level to the landing sill. (Except in the case of AC Series M open loop applications.)

The closed loop feedback power control shall be arranged to continuously monitor the actual elevator speed signal from the velocity transducer and compare it with the intended speed signal to verify proper and safe operation of the elevator. (Except in the case of AC Series M open loop applications.)

During operation of the elevator with an overhauling load (empty car up or loaded car down), precision speed control shall be obtained by the regulation system used in the power control. The power control shall have the capability to maintain regulation under varying loads. (Except in the case of AC Series M open loop applications.)

The controller shall provide stepless acceleration and deceleration and smooth operation at all speeds. The system shall provide the required electrical operation of the elevator control system including automatic application of the brake, which shall bring the car to rest in the event of a power failure.

The controller shall include absolute floor encoding which, upon power up, shall move the car to the closest floor to identify the position of the elevator. With absolute floor encoding it is not necessary to travel to a terminal to establish floor position.

Optional - LS- STAN or LS-QUTE landing systems can be used with PTC, VVMC and VFMC controllers, Refer to Section 10 for details.

Optional - Failure of the brake to lift as detected by a mechanical switch (if provided) shall cause the control system to take the elevator out of service at the next stop where it shall remain out of service until the condition is corrected.

PTC-SCR Recommended Use

PTC-SCR, using a six-pulse SCR drive, is an ideal low cost, closed loop (CL) control solution for DC geared elevator applications to 350fpm (1.78 m/s). This control system provides high reliability and low maintenance cost.

To create a PTC-SCR system specification:

- See Section 2.
- See “Specification Text, General, PTC, VVMC, VFMC” on page 4-2.
- See “Specification Text, SCR using 6-PULSE SCR DRIVE” on page 4-3.
- See “Specification Text, PTC Programmable Logic” on page 4-7.

Specification Text, SCR using 6-PULSE SCR DRIVE

The controller shall use a six pulse regenerative solid-state drive unit using SCRs to control motor armature current. The solid-state power control shall be a closed loop feedback design. The controller shall be a compact, self-contained unit providing stepless acceleration, deceleration and regulation at all speeds.

Isolation transformers or line inductors, plus proper filtering to eliminate both electrical and audible noise of SCR drives, shall be provided. The controller shall use a solid-state drive unit with solid-state power devices to control the motor field and brake.

A means of sensing motor field current shall be provided which shall cause electric power to be removed from the armature and brake if the direct current flowing in the shunt field of the motor is insufficient to prevent motor overspeeding.

A contactor shall be used to disconnect the hoist motor from the output of the drive unit each time the elevator stops. This contactor shall be monitored. The elevator shall not start again if the contactor has not returned to the de-energized position when the elevator stops.

All power feed lines to the brake shall be opened by an electro-mechanical switch. A single ground, short circuit or solid-state control failure shall not prevent application of the brake.

The controller shall provide stepless acceleration and deceleration and smooth operation at all speeds.

The controls shall be arranged to continuously monitor elevator performance so that, if the car speed exceeds 150 fpm during access, inspection, or leveling, the car shall shut down immediately, requiring a reset operation.

The controller shall include absolute floor encoding which, upon power up, shall move the car to the closest floor to identify the position of the elevator. With absolute floor encoding it is not necessary to travel to a terminal to establish floor position.

PTC-AC Series M Recommended Use

PTC-AC Series M is the most versatile control solution for geared elevators with AC hoist motors. This easily installed and adjusted control system can be configured for most applications.

Use open loop (OL) VVVF drives to 150fpm (0.76 m/s); use closed loop (CL) FLUX VECTOR drives to 350fpm (1.78 m/s). PTC-AC Series M non-regenerative control systems use the latest in AC drive technology and, for many applications, existing motors can be reused. Consult your MCE Sales Representative for specific motor recommendations.

To create a PTC-AC Series M specification:

- See Section 2.
- See “Specification Text, General, PTC, VVMC, VFMC” on page 4-2.
- See “Specification Text, AC Series M using VVVF or Flux Vector Drive” on page 4-4.
- See “Specification Text, VVVF Drives” on page 4-9.
- See “Specification Text, PTC Programmable Logic” on page 4-7.

To create a PTC-AC Series M Flux Vector system specification:

- See Section 2.
- See “Specification Text, General, PTC, VVMC, VFMC” on page 4-2.
- See “Specification Text, AC Series M using VVVF or Flux Vector Drive” on page 4-4.
- See “Specification Text, Flux Vector Drive ” on page 4-10.
- See “Specification Text, PTC Programmable Logic” on page 4-7.

Specification Text, AC Series M using VVVF or Flux Vector Drive

The controller shall use a variable voltage, variable frequency drive to control three-phase AC induction motors.

The drive shall use a three-phase, full-wave bridge rectifier and capacitor bank to provide a DC voltage bus for the solid-state inverter.

The drive shall use power semiconductor devices and pulse width modulation with a carrier frequency of not less than 2 kHz to synthesize the three-phase, variable voltage, variable frequency output to operate the hoist motor in an essentially synchronous mode.

The drive shall have the capability of being adjusted or programmed to achieve the required motor voltage, current and frequency to properly match the characteristics of the AC elevator hoist motor.

The drive shall not create excessive audible noise in the elevator motor.

The drive shall be a heavy-duty type, capable of delivering sufficient current to accelerate the elevator to contract speed with rated load. The drive shall provide speed regulation appropriate to the motor type.

A means shall be provided for removing regenerated power from the drive DC power supply during dynamic braking. This power shall be dissipated in a resistor bank which is an integral part of the controller. Failure of the system to remove the regenerated power shall cause drive output to be removed from the hoist motor.

A contactor shall be used to disconnect the hoist motor from the output of the drive unit each time the elevator stops. This contactor shall be monitored. The elevator shall not start again if the contactor has not returned to the de-energized position when the elevator stops.

All power feed lines to the brake shall be opened by an electro-mechanical switch. A single ground, short circuit or solid-state control failure shall not prevent application of the brake.

The controller shall provide stepless acceleration and deceleration and smooth operation at all speeds.

The controls shall be arranged to continuously monitor the performance of the elevator so that, if car speed exceeds 150 fpm during access, inspection, or leveling, the car shall shut down immediately, requiring a reset operation.

The controller shall include absolute floor encoding which, upon power up, shall move the car to the closest floor to identify the position of the elevator. With absolute floor encoding it is not necessary to travel to a terminal to establish floor position.

The controller shall have an RFI Filter to reduce EMI and RFI noise.

PTC-MG Recommended Use

PTC-MG utilizes a field proven drive unit, manufactured by MCE, which employs an analog pattern generator and integrates control of the generator field, motor field and brake. PTC-MG is an ideal low cost closed loop (CL) control solution for DC geared elevator applications to 350fpm (1.78 m/s).

To create a PTC- MG system specification:

- See Section 2.
- See “Specification Text, General, PTC, VVMC, VFMC” on page 4-2.
- See “Specification Text, MG using Generator Field Control” on page 4-6.
- See “Specification Text, PTC Programmable Logic” on page 4-7.

Specification Text, MG using Generator Field Control

The controller shall use a static drive unit using SCRs to control the generator shunt field, hoist motor field and brake. The solid-state power control shall be a closed loop feedback design. The controller shall be a compact, self-contained unit and shall provide stepless acceleration, deceleration and regulation at all speeds.

The power control shall have the capability to drive the generator field, positive or negative, to the degree required to maintain regulation under varying loads.

The solid-state power control regulation system shall incorporate linear and/or proportional amplifiers, precise reference circuit boards, and speed feedback provided by the tachometer, with output voltage and current proportional to the actual speed of the traction motor. Regulator action shall be by electronic comparison of a reference signal to the feedback signal currents and, when any difference is present, the amplifier shall adjust to reduce the difference.

The controller shall use a solid-state drive unit with solid-state power devices to control the motor field, machine brake, and generator shunt field. A means of sensing motor field current shall be provided which shall cause electric power to be removed from the armature and brake, if the direct current flowing in the shunt field of the motor is insufficient to prevent motor overspeeding.

All power feed lines to the brake shall be opened by an electro-mechanical switch. A single ground, short circuit or solid-state control failure shall not prevent application of the brake.

The controller shall provide stepless acceleration and deceleration and smooth operation at all speeds.

The controls shall be arranged to continuously monitor the performance of the elevator so that, if car speed exceeds 150 fpm during access, inspection, or leveling, the car shall shut down immediately, requiring a reset operation.

The controller shall include absolute floor encoding which, upon power up, shall move the car to the closest floor to identify the position of the elevator. With absolute floor encoding it is not necessary to travel to a terminal to establish floor position.

Specification Text, PTC Programmable Logic

All available options (consult your MCE Sales Representative) or parameters shall be field programmable without requiring external devices or knowledge of programming languages. Programmable options and parameters shall be stored in nonvolatile memory.

At a minimum, there shall be a 32-character alphanumeric display for programming and diagnostics. Programmable parameters and options shall include, but not be limited to, the following:

- Number of Stops/Openings Served (Each Car)
- Simplex/Duplex
- Single Automatic Pushbutton
- Selective Collective/Single Button Collective
- Programmable Fire Code Options
- Fire Floors (Main, Alternates)
- Floor Encoding (Absolute PI)
- Digital PIs/Single Wire PIs
- Programmable Door Times
- Programmable Motor Limit Timer
- Nudging
- Emergency Power
- Parking Floors
- Door Preopening
- Hall or Car Gong Selection
- Retiring Cam Option for Freight Doors.
- Independent Rear Doors
- MCE Standard Security
- Emergency Hospital Service
- Attendant Service
- Anti-nuisance - Light Load Weighing and Photo Eye

Field selectable, preprogrammed Fire Service operations compliant with the following Fire Codes:

- ASME A17.1
- California
- Hawaii
- Massachusetts
- City of Chicago
- City of Detroit
- City of Houston
- New York City
- Veterans Administration
- Washington DC
- Australia
- British
- Canadian B44

For duplex configurations, each elevator shall have its own computer and dispatching algorithm. Should one computer lose power or become inoperative, the other shall be capable of accepting and answering all hall calls. When both computers are in operation, only one shall assume the role of dispatching hall calls to both elevators.

The dispatching algorithm for assigning hall calls shall be real time, based on estimated time of arrival (ETA). In calculating the estimated time of arrival for each elevator, the dispatcher shall consider, but is not limited to, location of each elevator, direction of travel, existing hall call and car call demands, MG start up time, door time, flight time, lobby removal time penalty and coincidence calls.

The controller shall have field programmable outputs to activate different functions based on customer needs. These functions can be outputs such as those listed below.

- Fire Phase I Return Complete Signal
- Fire Phase II Output Signal
- Hall Call Reject Signal
- Emergency Power Return

The controller shall have field programmable inputs to initiate special operations based on customer needs. These functions can be inputs such as those listed below.

- Fire Phase I Bypass Input
- Fire Phase II Call Cancel Input
- Fire Phase II Hold Input
- MG Shut Down Input
- Attendant Service Input
- Building Security Input
- Hospital Emergency Operation Input

The controller shall include absolute floor encoding which, upon power up, shall move the car to the closest floor to identify the position of the elevator. With absolute floor encoding it is not necessary to travel to a terminal to establish floor position.

The controller shall have an RFI Filter to reduce EMI and RFI noise.

Optional - The controller shall have a serial port for communication with a data or computer terminal such as a CRT terminal, modem, etc.

Optional - The controller shall have a 3 Phase Line Inductor to match the minimum 3% line impedance recommended by various drive manufacturers.

Optional - The controller shall have a Drive Isolation Transformer, typically used to match line voltage to motor and drive voltage.

VVMC-1000 SCR Recommended Use

VVMC-1000 SCR used with an M3 Group System provides coordinated dispatching for up to 12 cars serving up to 64 landings. A six-pulse SCR drive provides an ideal, low cost, closed loop (CL) control solution for group operation of DC geared elevators to 350fpm (1.78 m/s). This control system provides high reliability and low maintenance cost.

To create a VVMC-1000 SCR Group system specification:

- See Section 2.
- See “Specification Text, General, PTC, VVMC, VFMC” on page 4-2.
- See “Specification Text, SCR using 6-PULSE SCR DRIVE” on page 4-3.

VFMC-1000 AC Recommended Use

VFMC-1000 AC used with an M3 Group System provides coordinated dispatching for up to 12 cars serving up to 64 landings. These reliable, value priced controls use VVVF or FLUX VECTOR drives for AC applications. VFMC-1000 AC is the most versatile control solution for group operation of geared elevators with AC hoist motors. This easily installed and adjusted control system can be configured for most applications.

Use open loop (OL) VVVF drives to 150fpm (0.76 m/s); use closed loop (CL) FLUX VECTOR drives to 350fpm (1.78 m/s). PTC-AC Series M non-regenerative control systems use the latest in AC drive technology and, for many applications, existing motors can be reused. Consult your MCE Sales Representative for specific motor recommendations.

To create a VFMC-1000 VVVF Group system specification:

- See Section 2.
- See “Specification Text, General, PTC, VVMC, VFMC” on page 4-2.
- See “Specification Text, AC Series M using VVVF or Flux Vector Drive” on page 4-4.
- See “Specification Text, VVVF Drives” on page 4-9.

To create a VFMC-1000 Flux Vector Group system specification:

- See Section 2.
- See “Specification Text, General, PTC, VVMC, VFMC” on page 4-2.
- See “Specification Text, AC Series M using VVVF or Flux Vector Drive” on page 4-4.
- See “Specification Text, Flux Vector Drive ” on page 4-10.

Specification Text, VVVF Drives

For VVVF applications (open loop), it is recommended that the AC motor have slip specifications between 8% and 12% or a NEMA rating of “D.”

The VVVF drive shall be capable of providing a braking pulse to use in the stopping sequence of the elevator. The braking pulse shall take the form of an adjustable DC current pulse applied to the AC motor for an adjustable period of time (0 to 0.75 second).

The VVVF drive shall allow programming different volts per hertz patterns to adjust drive control characteristics.

Specification Text, Flux Vector Drive

For Flux Vector applications (closed loop), it is recommended that the AC motor have a slip specification of 5% or less or a NEMA rating of “A” or “B.” The flux vector drive shall be capable of producing full torque at zero speed. The flux vector drive shall not require DC injection braking in order to control the stopping of the car. The flux vector drive shall use encoder feedback to regulate hoist motor speed. The encoder shall be mounted to the motor shaft.

VVMC-1000 MG Recommended Use

VVMC-1000 MG used with an M3 Group System provides coordinated dispatching for up to 12 cars serving up to 64 landings. VVMC-1000 MG uses a field proven drive unit, manufactured by MCE, which employs an analog pattern generator and integrates control of the generator field, motor field, and brake. VVMC-1000 MG is an ideal low cost, closed loop (CL) control solution for group operation of DC geared elevators to 350fpm (1.78 m/s).

To create a VVMC-1000 MG Group system specifications:

- See Section 2.
- See “Specification Text, General, PTC, VVMC, VFMC” on page 4-2.
- See “Specification Text, MG using Generator Field Control” on page 4-6.

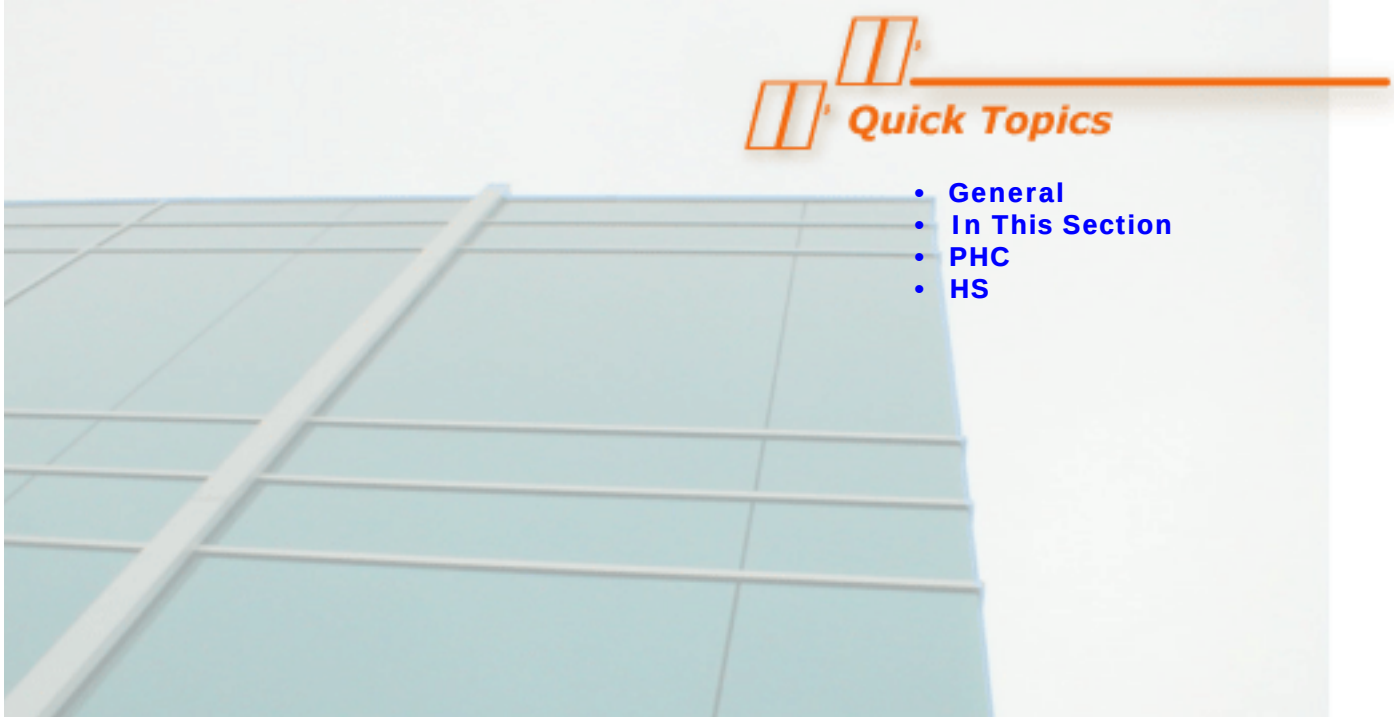

Hydraulic Controllers, PHC, HS

General

Model HMC-1000 controllers, industry recognized for over a decade, provide field proven reliability for all hydraulic elevator applications. MCE manufactures two series of Model HMC-1000 controllers for hydraulic elevators, Series “PHC” (Programmable Hydraulic Controller) and Series “HS.” Depending on project requirements, a consultant, contractor or building owner can choose which control system is appropriate for a specific application.

5

In This Section

- PHC Recommended Use
- HS Recommended Use

PHC Recommended Use

Series PHC Programmable Hydraulic Control brings sophisticated elevator control technology to hydraulic applications. These systems are ideal when low cost and the flexibility of field programmable controls are desired.

The user friendly PHC LCD display provides access to a comprehensive list of options, easily programmed using the 32-character alphanumeric display. Everything you need comes with the controller — no external tools or computers required.

Each PHC model is available in both simplex and duplex configuration for up to 16 landings. This series duplex configuration (PHC-D), with a computer for each controller, assigns cars on a real time basis using estimated time of arrival (ETA).

To create a Series PHC specification:

- See Section 2.
- See “Specification Text, PHC & HS General Specifications ” on page 5-2.
- See “Specification Text, PHC Programmable Logic” on page 5-3.

Specification Text, PHC & HS General Specifications

The elevator shall not require the functioning or presence of the microprocessor to operate on car top inspection or hoistway access operation (if provided) to provide a reliable means of moving the car if the microprocessor fails.

A motor limit timer function shall be provided which, in the event the pump motor is energized longer than a predetermined time, shall cause the car to descend to the lowest landing, park, open the doors automatically, and then close them. Car calls shall be canceled and the car taken out of service automatically. Operation may be restored by cycling the main line disconnect switch or putting the car on access or inspection operation. Door reopening devices shall remain operative.

A valve limit timer shall be provided which shall automatically cut off current to the down valve solenoids if they have been energized longer than a predetermined time. The car calls shall then be canceled and the car taken out of service automatically. Operation may be restored by cycling the main line disconnect switch or putting the car on access or inspection operation. Door reopening devices shall remain operative.

A selector switch shall be provided on the controller to select high or low speed during access or inspection operation as long as contract speed does not exceed 150 feet per minute.

The controller shall include absolute floor encoding, which upon power up, shall move the car to the closest floor to identify the position of the elevator.

Optional - Viscosity control (valve design must allow the use of this option) shall cause the car to accomplish the following operation. If a temperature sensor determines the oil is too cold, and if there are no calls registered, the car shall go to the bottom landing and, as long as the doors are closed, the pump motor shall run without the valve coils energized to circulate and heat the oil to the desired temperature. In the event that the temperature sensor fails, a timer shall prevent continuous running of the pump motor.

Optional - MCE Hydraulic Controllers are available with a battery lowering device pre-wired, pre-tested and integrated into the standard enclosure. For freight doors applications, a stand-alone battery lowering device can be provided.

Optional - MCE offers both solid state and mechanical starters for three and six or twelve lead motors (ATL and Y-Delta). MCE-supplied starters will be mounted within the controller enclosure unless a remote starter enclosure is specified.

Specification Text, PHC Programmable Logic

All available programming options (consult your MCE Sales Representative) or parameters shall be field programmable, without need for any external device or knowledge of any programming languages. Programmable options and parameters shall be stored in nonvolatile memory. At a minimum, there shall be a 32-character alphanumeric display used for programming and diagnostics. Programmable parameters and options shall include, but are not limited to, the following:

- Number of Stops/Openings Served (Each Car)
- Simplex/Duplex
- Single Automatic Pushbutton
- Selective Collective/Single Button Collective
- Programmable Fire Code Options/Fire Floors (Main, Alternates)
- Floor Encoding (Absolute PI)
- Digital PIs/Single Wire PI's
- Programmable Door Times
- Programmable Motor Limit Timer
- Nudging
- External Car Shutdown Input (e.g., battery lowering device)
- External Low Oil Sensor Input
- External Viscosity Control Input
- Parking Floors
- Hall or Car Gong Selection
- Retiring Cam Option for Freight Doors
- Independent Rear Doors
- MCE Standard Security
- Emergency Hospital Service
- Attendant Service
- Anti-nuisance - Light Load Weighing and Photo Eye

Field selectable, preprogrammed Fire Service operations compliant with the following Fire Codes:

- ASME A17.1
- California
- Hawaii
- Massachusetts
- City of Chicago
- City of Detroit
- City of Houston
- New York City
- Veterans Administration
- Washington DC
- Australia
- British
- Canadian B44

For duplex configurations, each elevator shall have its own computer and dispatching algorithm. Should one computer lose power or become inoperative, the other shall be capable of accepting and answering all hall calls. When both computers are in operation, only one shall assume the role of dispatching hall calls to both elevators.

The dispatching algorithm for assigning hall calls shall be real time, based on estimated time of arrival (ETA). In calculating the estimated time of arrival for each elevator, the dispatcher shall consider, but not be limited to, the location of the elevator, the direction of travel, the existing hall call and car call demands, the door time, flight time, lobby removal time penalty and coincidence calls.

The controller shall have field programmable outputs to activate different functions based on customer needs. These functions can be outputs as listed below.

- Fire Phase I Return Complete Signal
- Fire Phase II Output Signal
- Hall Call Reject Signal
- Emergency Power Return Complete

The controller shall have field programmable inputs to initiate special operations based on customer needs. These functions can be inputs as listed below.

- Fire Phase I Bypass Input
- Fire Phase II Call Cancel Input
- Fire Phase II Hold Input
- Attendant Service Input
- Building Security Input
- Hospital Emergency Operation Input

Optional - The controller shall have a serial port for communication with a data or computer terminal such as a CRT terminal, modem or CMS remote monitoring.

HS Recommended Use

Series HS using the HMC Group System provides coordinated dispatching for up to twelve Series HS hydraulic elevator controllers, each serving up to 16 landings. For multiple car hydraulic group operation use the Series HS controller. Series HS can be used for complex operations other than group. (Consult your MCE Sales Representative.)

Easily installed, the HMC Group System brings sophisticated traction control dispatching to hydraulic applications, ensuring the shortest possible waiting time for passengers while minimizing unnecessary elevator movement. This series uses an HMC Group System; refer to Section 7.0.

To create a Series HS specification:

- See Section 2.
- See “Specification Text, PHC & HS General Specifications ” on page 5-2.

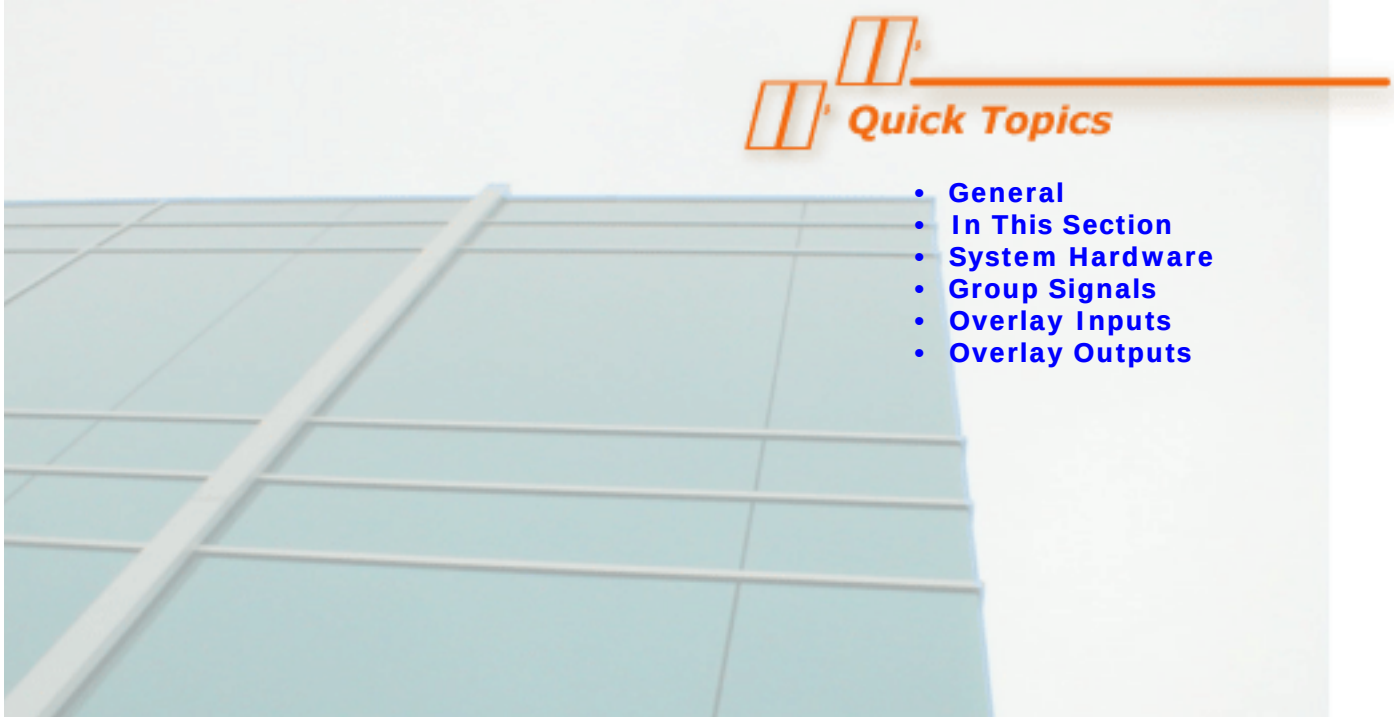

Intelligent Overlay System

General

The MCE IOS Intelligent Overlay System provides state-of-the-art microprocessor technology for existing groups of elevators with relay logic controls. The Intelligent Overlay System uses either M3 or AIM group control technology. For Group System specifications and details, refer to Section 7.

IOS Intelligent Overlay System dramatically reduces hall call “waiting” time while improving performance and dispatching reliability for older relay logic systems. Since MCE’s group system does not differentiate between overlay controllers and new MCE controllers, car controllers can be replaced one at a time. This allows incremental modernization which can frequently overcome otherwise insurmountable budget limitations.

All M3 and AIM Group System features are available with the MCE Intelligent Overlay System. These features include fire service, hospital service, emergency power, security, remote monitoring, etc. Thus, it is possible to bring an elevator system up to date and meet code requirements with an IOS upgrade. In addition to substantially reduced hall call waiting times, IOS eliminates a majority of the original logic relays, so less maintenance is required. In most cases, complete dispatching and/or auxiliary cabinets can be removed.

This section describes basic Intelligent Overlay System hardware and identifies the signals that must be provided as well as the signals the group overlay system generates to be used by the power control subsystem. Providing proper signals to the IOS is essential. Therefore, it is important to make sure adequate documentation is available and that proper signals are generated and used.

In This Section

- Overlay System Hardware
- Group Signals
- Overlay Interface Inputs
- Overlay Interface Outputs

System Hardware

The Intelligent Overlay System shall consist of a group cabinet and one overlay interface cabinet per individual car.

The contractor or customer must provide interconnection details in the form of as-built wiring diagrams, including power control subsystem terminal numbers. Hardware shall be manufactured according to diagrams provided by the elevator contractor.

The group cabinet shall include the computer and input/output boards necessary for the hall calls and other signals required for group operation. It shall also include the high speed serial interface connections to individual overlay interface cabinets, and peripheral equipment such as CRT terminals, modems, and printers.

The overlay interface cabinet shall include the computer, high speed serial interface connection, input/output boards and relays. The input signals shall be taken from the existing power control subsystem and connected to the overlay interface cabinet.

Group Cabinet Signals

Inputs to the group cabinet shall be provided to the designated terminals at specified voltages in the form of a contact closure. The following list includes some of these inputs:

- Front and/or Rear Hall Call Signals
- Main and Alternate Fire Recall Floors
- Emergency Power Signal
- Spare Inputs are Available for Special Applications

Outputs shall be available for special applications.

Call registration and lamp acknowledgment shall be by means of a single wire per call.

Overlay Interface Cabinet Inputs

Inputs to the overlay interface cabinet shall be provided to the designated terminals at specified voltages in the form of contact closures and shall include the following:

- Car position shall be provided by contact closures, one per floor. More than one contact may be closed only when the car is moving from one floor to another. The position shall change from the previous floor to the new floor when the new floor is first seen. The position shall be the advanced or stopping position and shall be made active prior to the car being in a position to stop at a floor.
- Signals shall be provided, one for each car call. Call registration and lamp acknowledgment shall be by means of a single wire per call.
- One signal shall indicate activation of each of the following devices: door open button, door close button, safety edge, photo electric eye, door open limit (open when doors are fully open), door close limit (open when doors are fully closed), and door zone.
- One signal shall indicate each input (off, hold, and on) from the in-car fire service switch and the car call cancel button.
- One signal shall be provided to indicate that the car is on inspection.
- One signal shall be provided to indicate that the car is on automatic operation. This signal shall become inactive if the car is on independent service.
- Two signals shall be provided to indicate that the car is in motion, one for the up direction, one for the down direction.
- One signal shall be provided to indicate that the car is operating at contract speed or accelerating to contract speed. This signal shall open when the car begins to slow down or is stopped.
- One signal shall be provided to indicate that the car is loaded to a predetermined capacity or greater.

In addition to these signals, there shall be spare inputs available per car which may be assigned for a specific purpose.

Overlay Interface Cabinet Outputs

- Outputs of the overlay interface cabinet shall be in the form of contact closures.
- One signal shall indicate that there is a demand above the position of the car.
- One signal shall indicate that there is a demand below the position of the car.
- One signal shall indicate that the motor generator may be started in response to a demand.
- One signal shall activate to slow down and stop the car.
- One signal shall activate the up hall lantern.
- One signal shall activate the down hall lantern.
- One signal shall activate to open the doors.
- One signal shall activate nudging.
- One signal shall indicate that the car has accepted Fire Recall Phase I and another signal shall indicate that the car is in motion in order to bypass the in-car emergency stop switch.
- One signal shall activate the fire warning indicator.
- One signal shall activate the fire warning light.
- One signal shall activate the passing floor gong.

In addition to these signals there shall be additional spare output signals that may be assigned for a specific purpose.

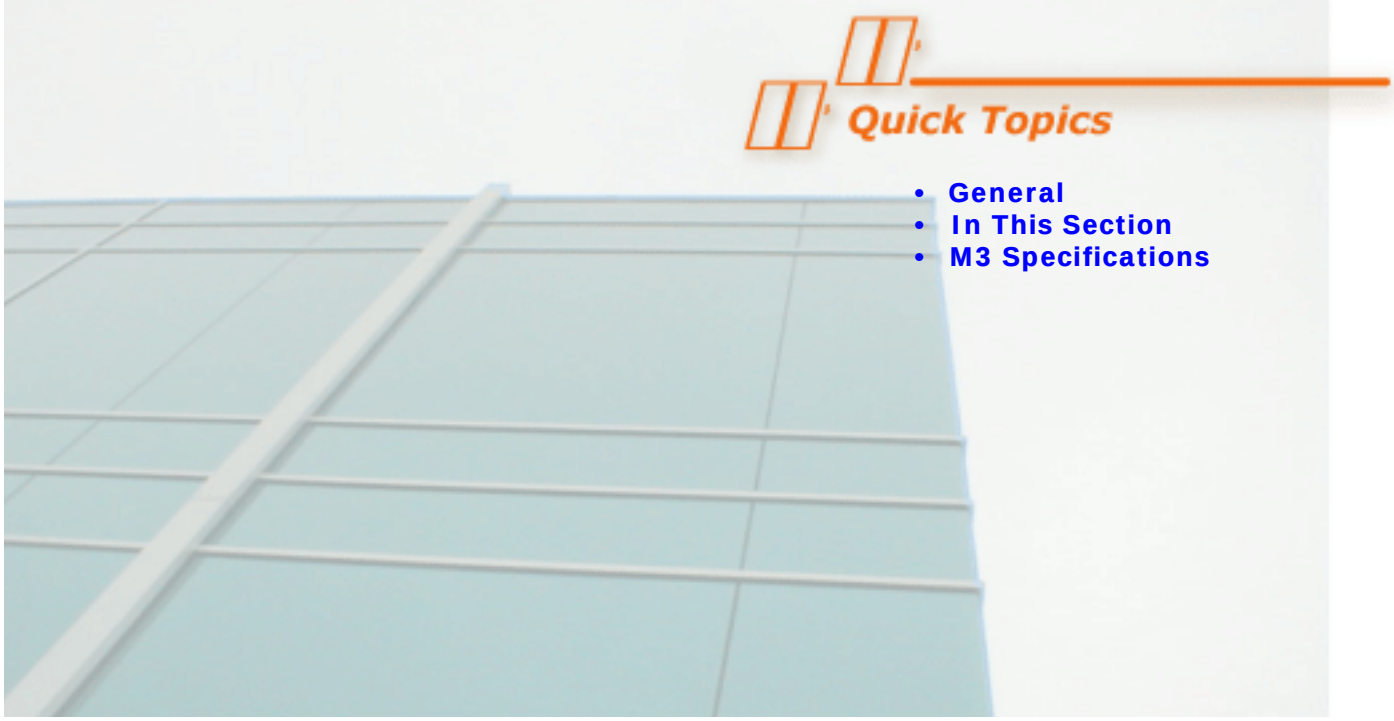

M3 Group System

General

The M3 Group System includes a group dispatcher and up to twelve IMC, VVMC, VFMC traction or HS hydraulic controllers (HS uses HMC Group System). The M3 Group System is based on a state-of-the-art network of microcomputers linked together through a high speed data communication link.

The Group System analyzes building traffic conditions including, but not limited to hall call demand, number of assigned hall calls, number of cars in operation, number of car calls, number of car stops, car position, car direction, anticipated direction of car travel, car loading, car status, car motion status, car door status, call waiting time, door opening time, door closing time, coincidence calls, and estimated time of car arrival.

The Group System evaluates real time data and selects the best car to serve a given hall call demand. The assignment of cars by the Group System provides efficient handling of varying traffic demands in terms of passenger waiting and transit time.

In This Section

• M3 Group System Specifications

M3 Group System Specifications

The group system shall be based on a multi-tasking/multi-processing network of microcomputers. At a minimum, a 32-bit embedded RISC controller that operates at 16 MHZ or faster shall be provided. The Group System computer shall have the capacity to address four megabytes or more of EPROM plus RAM, and shall provide up to eight industry standard serial communication ports for use with modems and other peripherals.

Specification Text, M3 Dispatching Algorithm

The dispatching algorithm shall use mathematical modeling and queuing theory to optimize elevator service. The dispatching algorithm shall minimize the mean waiting time, the maximum waiting time and the number of late calls.

This algorithm shall cover all two-way traffic demands including light, medium, and heavy traffic situations. The algorithm shall compile the required physical and statistical data and parameters necessary to perform the above minimization tasks.

Specification Text, Parking Operation

Group system software shall include sophisticated parking programs that provide flexible parking options allowing the user to select the most efficient parking configuration for a specific building. Parking floors shall be divided into two groups: lobby parking floors and non-lobby parking floors. Lobby parking floors are the floors where a lobby function is performed. Non-lobby parking floors are floors where the car performs a regular parking function.

There shall be any number of user definable lobbies with four levels of priority to allow maximum system flexibility. More than one car could park at any lobby, and the number of cars that can park at any lobby shall be field programmable.

There shall be 15 levels of priority for non-lobby parking floors. When all lobby parking floors are occupied, the next car that is ready to park shall park at the highest priority non-lobby floor. If all the non-lobby parking floors are of the same priority, the next car that is ready to park shall park at the closest non-lobby floor. The priorities for non-lobby parking floors shall be field programmable and more than one car could park at any non-lobby floor.

For motor generator systems, once a car is parked for a preset time period, its MG shall shut down. The MG shutdown time shall be field adjustable. A parked car with its MG shutdown shall not respond to any hall calls unless the Group Supervisor detects that the hall call demand has increased to a level that requires the service of a shutdown car.

Specification Text, Lobby Operation

A lobby floor is a floor designated to be a lobby. A user programmable option shall allow the first car that parks at a lobby to park with its doors closed, with its doors open for a programmable time period, or with its doors open indefinitely.

Specification Text, Time Activated Dispatching Configurations

The group system shall allow eight different system configurations to be programmed by the user. The programmable parameters for each configuration shall include the dispatching mode of operation, lobby parking floors, non-lobby parking floors, lobby operation, lobby and non-lobby parking delay timers, and long wait hall call threshold times. The user can invoke any of these configurations, any time of the day. There shall be up to 16 time selections for these configurations.

Specification Text, Traffic Identification Operation

The group system software shall operate as a dynamically balanced system for two-way traffic. Depending upon the traffic pattern in the building, the Group Supervisor shall automatically modify the mode of operation to lobby up peak, demand up peak, or demand down peak.

Specification Text, Lobby Up Peak

The lobby up peak mode shall be capable of being initiated using a switch input, by manual selection from the keyboard, by timed configuration or by automatic monitoring of load weigher inputs and/or the number of up car calls registered at the main lobby floor(s). The lobby up peak condition shall be classified as low or high and shall be programmable from the display terminal. A high level of lobby up activity shall assign more cars to the lobby than a low level.

The lobby up peak program shall handle heavy incoming traffic at one or two lobby landings, at the same time or at different times. This program shall assign one or more cars to the lobby depending on the lobby up peak classification for that particular lobby. The first car at the lobby shall stay with its doors open or closed for a programmable length of time. If more than one car is assigned to the lobby, then all other cars shall stay at the lobby floor with their doors closed. The loading car shall stay at the lobby landing for the duration of the up peak interval, unless dispatched by the loaded car input.

A peak participating car is a car assigned to participate in lobby up peak operation. Depending on the level of traffic, the system shall assign a variable number of cars for lobby up peak operation. All non-lobby up and down hall calls shall be assigned to non-peak participating cars. The selection of cars shall be done dynamically.

Specification Text, Demand Up Peak

Demand up peak mode shall be capable of being initiated using a switch input, by selection from the keyboard, by timed configuration, or as automatically determined by the system.

The demand up peak program shall reverse the car's direction at its highest call and cause it to travel nonstop to the lowest call in the building. The cars shall collect up calls as they are encountered until the cars are loaded to a predetermined adjustable level that shall then cause the cars to bypass hall calls until they make a high call reversal. The next down-traveling car shall stop, reverse direction at the floor above the floor at which the prior car's load switch operated and then collect up calls in the same manner as the previous car.

Specification Text, Demand Down Peak

Demand down peak mode shall be capable of being initiated by using a switch input, by selection from the keyboard, by a timed configuration, or automatically as determined by the system.

The demand down peak mode shall reverse the car's direction at its lowest call and cause it to travel nonstop to the highest call in the building. The cars shall collect down calls as they are encountered until the cars are loaded to a predetermined adjustable level that shall then cause the cars to bypass hall calls until they make a low call reversal. The next up-traveling car shall stop, reverse direction at the floor below the floor at which the prior car's load switch operated and then collect down calls in the same manner as the previous car.

Specification Text, Emergency Dispatch

In case of a malfunction in the Group System communication network, the computers operating the individual car computers shall detect the malfunction and provide emergency dispatching of all in-service cars.

Specification Text, Emergency Power, Optional

When emergency power is detected by an input, the cars shall be returned to the main lobby one at a time, and remain there with doors open. Once all cars have been returned to the lobby, one or more cars may be selected to run under emergency power. Selection of the cars that will run under emergency power shall be done automatically by the Group Supervisor. This automatic selection may be overridden through manual selection. The actual number of cars allowed to run under emergency power shall be a preprogrammed value and the Group Supervisor shall not allow any more than the preprogrammed number of cars to run on emergency power.

Specification Text, Out-of-Service

The system shall automatically remove any car from group operation if the car is delayed in responding to demand for a field adjustable time period. The system shall automatically restore the car to system operation when the reason for the delay has been corrected.

Specification Text, Loaded Car Dispatch, Optional

Waiting time shall be removed from the main lobby dispatching interval when a car becomes loaded to a predetermined adjustable level.

Specification Text, Display Terminal

A CRT terminal or an IBM compatible computer shall be provided for the machine room. These devices shall provide menu driven access to reports and other functions. At a minimum, the following reports shall be provided:

Job Configuration - This report shall provide a brief description of the system, including the job number, programmable job name, number of cars, number of landings, openings per landing for each car, programmable car designation, programmable landing designation, fire service options, serial communication port definitions, and other system options.

System Performance Graph - This report shall provide elevator system performance data based on hall call waiting times. At the end of each hour, the number of up and down hall calls and the up and down waiting time averages shall be calculated and saved in non-volatile RAM. This information shall be stored for a minimum of seven days.

Hall Call Distribution - This report shall provide hourly hall call distribution in a tabular format for each hour, showing the number of hall calls which were answered within 15 second intervals for each landing and direction, and the percentage and number of cars that were in service during a specified time frame. This information shall be stored for at least 24 hours.

Graphic Display of Elevator Status - This report shall provide a graphic display of the elevator hoistway to give the user a comprehensive picture of car location, door status, direction of travel, car calls registered, hall calls registered, hall call assignments, estimated time of arrival of a car for a registered hall call, wait time of a registered hall call, floor labels, system status, and car status. The per-car status window shall display car status including automatic operation, inspection, fire service main and alternate, timed out of service, top floor demand, and bottom floor demand.

Entering Hall and Car Calls - The display terminal shall provide a means for entering hall and car calls using the arrow and enter keys. If the call is valid and registered, a corresponding symbol shall be displayed on the screen.

Dispatching Parameters - The display terminal shall be capable of monitoring and adjusting the group dispatching parameters, including, but not limited to, the eight configurations of parking floors and their priorities, system mode of operation, parking delay times, etc., system parameters of long hall call wait threshold time and lobby up peak parameters.

Real-Time Clock - The display terminal shall provide the capability to program the group system real-time clocks (Group Supervisor and all car controllers).

Car Flags - The display terminal shall provide simultaneous viewing of most individual car flags to detect important sequential events.

Special Events Calendar - The Group Supervisor shall have the ability to document 250 to 500 important fault conditions or events in a Special Events Calendar. The data shall include the type of fault or event, the date and time it occurred, and the date and time it was corrected.

The display terminal shall have the ability to display the Special Events Calendar entries in chronological order to allow the user to examine the documented faults or events. In addition, a description of each event, probable cause(s) of the fault or event and suggested troubleshooting tips shall be provided on-line. The capability to clear all the documented faults and events shall also be provided.

Specification Text, Printer, Optional

A printer shall be provided to allow a permanent copy of reports available from the display terminal to be printed for records or easy reference.

Specification Text, SmartLINK for Hall Call Signals, Optional

The group system shall use the SmartLINK for Hall Call Signals serial communication system. See Section 10 for details about SmartLINK for Hall Call Signals.

Specification Text, Basic Security, Optional

The display terminal shall provide the capability to program the adjustable variables and display information for Basic Security. See Section 15 for details about Basic Security.

Specification Text, ACE Security, Optional

The display terminal shall provide the capability to program the adjustable variables and display information for Access Control for Elevators (ACE). See Section 15 for details about Access Control for Elevators (ACE).

Specification Text, Security Interface System for Windows, Optional

Specification Text, Central Monitoring System (CMS), Optional

The capability to monitor the M3 Group System from a local and/or remote location using a PC and Central Monitoring System (CMS) software shall be provided. See Section 14 for details about CMS.

Specification Text, Keyboard Control for Elevators (KCE), Optional

The display terminal, through CMS, shall provide the user with a submenu allowing programming of certain key functions (Central Monitoring System required). Consult your MCE Sales Representative.

Specification Text, Multiple System Display (MSD), Optional

The capability shall be provided to simultaneously monitor a number of M3 Group Systems through a PC using an easy-to-understand display. MSD is typically used as a lobby display where several elevator systems must be monitored at the same time. Up to eight direct connections or up to sixteen Ethernet connections shall be supported.

Specification Text, Split Bank, Optional

The capability shall be provided to automatically, using a timer table, allow one or more cars to operate independently of the group system. Split Bank is typically used for freight cars, express service, shuttle service or swing operation.

Machines and Motors

General

MCE offers machines and motors designed specifically for the elevator industry. Included are DC and AC gearless machines, DC and AC hoist motors, motor generator sets, and AC hydraulic motors - both submersible and dry.

We are pleased to offer Imperial Electric motors, which combine the finest materials available with unparalleled design and manufacturing expertise. Imperial has built an enviable reputation for total quality by focusing on contemporary elevator rotating equipment. You can expect trouble-free installation, extended equipment reliability, and responsive service.

MCE may provide motors from various sources in order to meet customer specifications, satisfy delivery commitments or address the requirements of a particular application. Depending on project requirements, a consultant or contractor can choose various machines and motors for specific applications.

In This Section

- DC Gearless Machines
- AC Gearless Machines
- DC Hoist Motors
- AC Hoist Motors
- Motor Generator Sets
- AC Hydraulic Motors

DC Gearless Machines

Imperial DC Gearless machines are provided including a slow-speed DC motor, brake, sheave and pedestal bearings mounted to a fabricated base. The motor is designed for 230% of rated current at 70% rated speed. The fields can be forced for acceleration or deceleration. Standard sheave diameters of 26 inches (660.4-mm), 30 inches (762-mm) and 33 inches (838.2-mm) are available in a variety of grooving arrangements.

Imperial DC Gearless machines are recommended for speeds up to 1000 fpm. Class B insulation is standard (class F insulation is available). Sheave groove tolerance is ±0.009 inches (0.2286mm). Consult your sales engineer for G.S.A. or other special applications.

AC Gearless Machines

Three Permanent Magnet, AC, Gearless, synchronous machine models are provided:

- 470: 472 and 475 models, 1764 to 2756 lb loads
- 520: 522 and 528 models, 2000 to 5500 lb loads
- 800: 802, 805, 808 models, 2000 to 8000 lb loads

Imperial AC Gearless machines are recommended for speeds up to 1400 fpm. Class F insulation is standard. Sheave groove tolerance is ±0.009 inches (0.2286mm). Consult your sales engineer for G.S.A. or other special applications.

DC Hoist Motors

Rugged and dependable, Imperial DC hoist motors are renowned in the industry. Foot-mounted configurations are available for most machines. A variety of flanges are available, including NEMA C, D, Titan 1, Westinghouse, and others. Standard loop voltage is 240VDC. Special voltages available.

Imperial DC hoist motors have a 60-minute duty cycle and are available in 10 through 75 horsepower at either 1150 or 850 rpm. Specifics: Class B insulation, end thrust with dual ball bearings and drip-proof construction. Consult your sales engineer for Totally Enclosed Non-Ventilated (TENV) or other special designs.

AC Hoist Motors

Imperial AC hoist motors are known for dependability. Foot-mounted configurations are available for most popular machine designs. A variety of flanges are available, including NEMA C, D, Titan 1, Westinghouse, and others. Specifics: frame and brackets of rugged cast iron, rotor of die cast aluminum, laminations of fully processed electrical steel, end thrust with greaseable ball bearings and drip proof construction. Totally enclosed, fan cooled models are available. Class B insulation is standard, Class F is available. A 50° C rise in temperature is standard. Motors may be ordered with factory mounted encoder.

Imperial motors designed for VVVF include closed loop, low slip (2-5%), 60 minute duty and open loop, high slip (10-13%) 30 minute duty. Motors from five to 100 horsepower are available in speed ranges from 600 to 1800 rpm. Three-phase AC voltages of 200, 208, 230, 440, 460, 480, 550, and 575 are available.

Motor Generator Sets

Imperial Motor Generator Sets are comprised of an alternating current, constant speed drive motor coupled to a special DC generator. The drive motor and generator are mounted on a single, large diameter shaft supported by two ball bearings. Imperial brush rigging is designed for utmost dependability. Positive contact and accurate alignment are maintained throughout brush life. Low inertia, constant pressure springs eliminate the need for brush adjustment.

Power ratings of 7.5 KW through 50 KW are available. A 240 DC loop voltage is standard, special voltages are available. Three-phase AC voltages of 200, 230/460 and 575 are available.

AC Hydraulic Motors

AC Submersible Motors are reliable. These ruggedly built, highly efficient motors are designed to mount on all major hydraulic pump units. The motor, with its extra-reach, wick-proof leads, is specially designed and sealed for submerged operation in hydraulic oil. Motors rated for 80 starts per hour are available from 15 through 50 horsepower. Specifics: Motors are 2-pole, 3600 rpm, single ball bearing type with thermostatic overheat-protection. Three-phase AC voltages of 200, 230/460 and 575 are available in Wye Start, Delta Run or Across-the-Line Delta Start design. All motors are subjected to rigorous factory testing before shipment.

AC Dry Hydraulic Motors are designed for use with belted hydraulic pump systems. These Imperial motors are exceptionally quiet, highly efficient and built for rugged duty. Totally Enclosed Fan Cooled (TEFC) designs are available. Motors rated for 80 or 120 starts per hour are available from 15 through 100 horsepower. Specifics: Motors are 1800 rpm with dual ball bearing and drip-proof construction. Three-phase AC voltages of 200, 230/460 and 575 are available in Wye Start, Delta Run or Across-the-Line Delta Start design.

Note

Contact MCE Sales Engineering for more information on stand-alone motor sales.

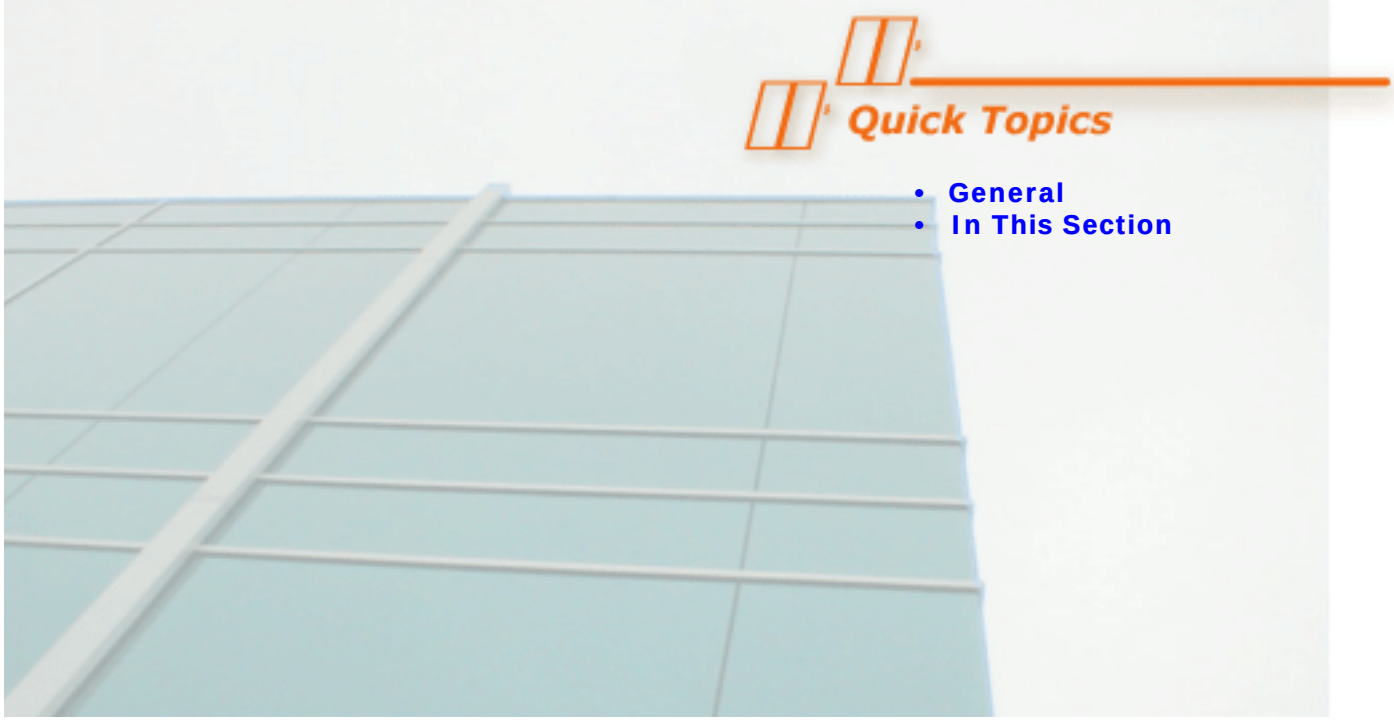

Controller Options

General

Depending on the application, features and accessories described in this section are available for MCE controllers as standard or optional equipment. A consultant, contractor or building owner can choose which features and accessories are appropriate for a specific application.

Certain features or accessories may not be available on some controllers. Consult your MCE Sales Representative for further information.

In This Section

- Attendant Service Operation
- Binary Position Indicator Outputs
- Call/Send Operation
- CRT/Keyboard
- Down Collective
- Dumbwaiter Ejector Control
- Dumbwaiter Queuing Control
- Earthquake Operation
- Emergency Power
- Hospital Emergency
- Integral Voice Annunciation
- Keyboard Control
- Load Weighing Anti-Nuisance

- Load Weighing Dispatch
- Load Weighing Hall Call Bypass
- Load Weighing Overload
- Load Weighing Pre-torquing
- Manual Doors
- Monitoring with CMS
- Monitoring from Remote Location
- Motor-Generator Shutdown Switch
- On-Board Diagnostics
- Power Freight Door Control
- Rear Doors (Staggered/Independent)
- Rear Doors (Walk-Through/Independent)
- Security
- Serial Communication Car Operating Panel
- Serial Communication Hall Fixtures
- Serial Position Indicator
- Single Automatic Pushbutton
- Single Button Collective
- Swing Car Operation
- Custom Software

Attendant Service Operation

Optional - An attendant service switch shall be provided to initiate the following operations:

- When the car is stopped at a landing, the doors shall open automatically and shall remain open until closed by the attendant.
- The doors shall be closed by constant pressure on any one of the following controls: the door close button, a car call button, car switch or the up or down attendant direction buttons.
- The car shall receive hall calls as they are normally assigned by the controller logic system, but response shall be determined by the attendant. A momentary buzzer shall sound, and attendant direction lights shall indicate whether the call originated above or below the car.
- A bypass button shall be provided to override hall calls, permitting the attendant to proceed nonstop to a selected call.
- In case of fire service operation, the attendant shall be notified by the audio-visual fire warning indicator.

Binary Position Indicator Outputs

Optional - The controller shall provide binary coded position indicator (PI) outputs to drive position indicators from selected manufacturers.

Call/Send Operation

Optional - This feature is typically used for dumbwaiters or freight elevators.

A call/send switch shall be provided. When placed in the on position, the call/send switch shall initiate the following operations:

- A hall station shall be provided at each landing, consisting of a single call button and a series of send buttons corresponding to each landing in the building.
- Call - The car shall be called to a floor from the hall call stations by registering a call at that floor.
- Send - The car shall be sent to a floor from the hall call stations by registering a call for that floor.
- When the car arrives at a landing, the doors shall open automatically and then be closed by the hall station door close button. If automatic door close operation is in use, the doors shall close after a programmable time period.
- The car shall respond to only one call/send demand at a time.

CRT / Keyboard

Optional - The CRT display terminal shall support an easy-to-use, menu driven diagnostic tool designed to provide essential information about the elevator system to the service technician, passengers, or to a remote location for security or other purposes. The CRT display terminal shall consist of a monitor and a keyboard. A CRT display shall consist of a monitor only. All CRT display terminal systems shall include the following features:

- Menu-Driven Format
- Job Summary Page
- Graphic Display of Elevator System Status
- Car Flags
- Elevator System Performance Pages

The machine room CRT display terminal shall provide the service technician with diagnostic information about the elevator system to facilitate troubleshooting and evaluation of elevator system performance.

Note

Certain control products (such as IMC) may require a CRT display terminal for adjustment purposes.

Optional - The remote CRT display or CRT display terminal can be used for different applications, such as a lobby terminal (to inform the passengers of car position and direction of travel) or in a security room or fire control center for use by building personnel. Remote monitoring uses modem communication or line drivers.

Optional - A printer shall be provided which shall allow the user to print out any of the available information.

Down Collective

Optional - The controller shall be a down collective system that only responds to down hall calls above the lobby. The controller shall respond to car calls in the direction of travel. An up traveling car shall proceed to the highest down hall call and then collect calls in the down direction of travel. Once the lowest down hall call and car call have been answered, the down collective process shall be repeated.

Dumbwaiter Ejector Control

Optional - All ejector controls shall be included as an integral part of the controller.

Dumbwaiter Queuing Control

Optional - All cart and tray queuing controls shall be included as an integral part of the controller.

Earthquake Operation

The controller shall be designed according to applicable code requirements for earthquake operation.

Emergency Power

Optional - (Traction Elevators) When emergency power is detected, cars shall return to the main lobby one elevator at a time, and remain there with doors open. While each car is being returned, all other cars shall be shut down so as not to overload the emergency power generator. Once all cars have been returned to the lobby, one or more cars may be selected to run under emergency power, depending on the capability of the emergency power generator. Selection of cars that run under emergency power shall be done automatically by the group system. This automatic selection may be overridden through manual selection. The actual number of cars allowed to run under emergency power shall be a preprogrammed value and the number of cars allowed to run shall not exceed this value.

Optional - (Hydraulic Elevators) A means of lowering the elevator shall be provided when there is a power failure. This operation shall bring the car to the lowest landing and allow passengers to exit the elevator. This operation requires a separate battery operated power supply system. Emergency power generator control is also available.

Hospital Emergency

Optional - This service shall call any eligible in-service elevator to any floor on an emergency basis. A medical emergency call switch shall be installed at each floor where medical emergency service is desired.

When the medical emergency momentary call switch is activated at any floor, the medical emergency call registered light shall illuminate at that floor only, and the elevator group system shall instantly select the nearest available elevator to respond to the medical emergency call. All car calls within the selected car shall be canceled and any landing calls which had previously been assigned to that car shall be transferred to other cars. If the selected car is traveling away from the medical emergency call, it shall slow down and stop at the nearest floor, without opening the doors, reverse direction and proceed nonstop to the medical emergency floor. If the selected car is traveling toward the medical emergency floor, it shall proceed nonstop to that floor. If at the time of selection, the car happened to be slowing down for a stop, it shall stop without opening the doors, then start immediately toward the medical emergency floor.

On arrival at the medical emergency floor, the car shall remain with doors open for a predetermined time interval. If, after this interval has expired, the car has not been placed on in-car medical emergency operation, the car shall automatically return to normal service.

A medical emergency key switch shall be located in each car operating station for selecting in-car medical emergency service. Upon activation of the key switch, the car shall be ready to accept a call for any floor, and after the doors are closed, proceed nonstop to that floor. The return of the key switch to the normal position shall restore the car to group operation.

Any car selected to respond to a medical emergency call shall be removed from automatic or group service and shall accept no additional calls, emergency or otherwise, until it has completed the initial medical emergency function.

Any eligible car in service may be selected. As additional medical emergency calls are registered in the system, other eligible cars shall respond as described above, on the basis of one medical emergency call per car. If all cars are out of service and unable to answer an emergency call, the medical emergency call registered light shall not illuminate.

Integral Voice Annunciation

Optional - The controller shall include, as an integral part of the controller, a computer voice annunciator. The contractor shall only need to furnish wiring to the elevator cab and a speaker. The annunciator shall announce the floor number and the intended direction of travel.

Keyboard Control

Optional - Computer control shall be provided to turn on/off certain elevator key operated functions, such as independent service, swing car operation and so forth. This control shall be available from a remote station as well as from the machine room. Consult your MCE Sales Representative.

Load Weighing Anti-Nuisance

Optional - The computer shall cancel all previously registered car calls if the number of car calls registered exceeds a predetermined adjustable number while the light load function is active. A load weighing device is required to implement the load weighing anti-nuisance feature (see Section 13, Load Weigher).

Load Weighing Dispatch

Optional - All door dwell time shall be removed from any lobby landing should cars become loaded to a predetermined load level. A load weighing device is required to implement the load weighing dispatch feature (see Section 13, Load Weigher).

Load Weighing Hall Call Bypass

Optional - Cars shall bypass hall calls if loaded to a predetermined load level. A load weighing device is required to implement the load weighing hall call bypass feature (see Section 13, Load Weigher).

Load Weighing Overload

Optional - Cars shall remain at the floor with doors open if loaded to a predetermined load level considered unsafe to move the elevator. A load weighing device is required to implement the load weighing overload feature (see Section 13, Load Weigher).

Load Weighing Pre-Torquing

Optional - A system for pre-torquing gearless DC hoist motors shall be provided in order to ensure consistently smooth starts. A load weighing device is required to implement the pre-torquing feature (see Section 13, Load Weigher).

Manual Doors

Optional - The controller shall include circuitry for the operation of manual doors. The controller shall provide for the operation of retiring cams, gate release solenoids and other appurtenances that may be required with manual doors.

Monitoring with CMS

Optional - For Central Monitoring System (CMS), refer to Section 14.

Monitoring from Remote Locations

Optional - Refer to Section 9, CRT/Keyboard.

Motor Generator Shutdown Switch

Optional - A switch shall be provided to control the shutdown of the motor-generator set for each car. In the “on” or normal position, the motor-generator shall run as system demand dictates. When placed in the “off” or shutdown position, the switch shall return the car to the main lobby landing. When the car arrives at the landing, it shall perform normal door operation and the motor-generator shall be shut down once the doors are fully closed. Optionally, the car may be shut down with the doors left open.

On-Board Diagnostics

Each controller shall be provided with on-board diagnostics for quick and easy troubleshooting of basic functions.

Power Freight Door Control

Optional - Elevator controllers shall include all the logic and power controls required for power freight door operation. Alternatively, controllers shall provide the necessary interface to operate with power freight door controllers as manufactured by a freight door manufacturer.

Rear Doors (Staggered / Independent)

All MCE controllers can provide the necessary interface to control staggered rear doors.

Rear Doors (Walk-Through / Independent)

All MCE controllers can provide the necessary interface to control walk-through rear doors.

Security

Optional - Refer to Section 15, Elevator Security for specifications.

Serial Communication Car Operating Panel

Optional - Refer to Section 10, SmartLINK Serial Communication for specifications.

Serial Communication Hall Fixtures

Optional - Refer to Section 10, SmartLINK Serial Communication for specifications.

Serial Position Indicator Driver

Optional - A direct interface shall be provided for CE electronic fixtures using three-wire serial communication.

Single Automatic Pushbutton

Optional - The controller shall provide automatic operation by means of one button in the car for each landing served and one button at each landing. If any car or landing button has been actuated, pressing any other car or landing button shall have no effect on the operation of the car until the response to the first button has been completed.

Single Button Collective

Optional - The controller shall provide automatic operation by means of one button in the car for each landing served and one button at each landing. All stops registered by the momentary actuation of landing or car buttons are made irrespective of the number of buttons actuated or of the sequence in which the buttons are actuated. With this type of operation, the car stops at all landings for which buttons have been actuated, making the stops in the order in which the landings are reached after the buttons have been actuated, but irrespective of its direction of travel.

Swing Car Operation

Optional - Swing car operation shall allow an elevator to be removed from the normal group system and operated independently of the normal system hall calls. The swing car shall respond only to corridor calls entered from a separate hall riser and shall operate as a simplex car when removed from the group system. The car shall be placed in this mode of operation by a key switch in the main lobby corridor, car, keyboard or other panels which shall immediately remove the car from the group system. Any hall calls that had previously been assigned to the swing car by the group system shall immediately be reassigned.

Acting as a simplex car, the swing car shall operate from its own independent set of hall calls, and it shall be possible to assign a parking floor to the swing car without regard to the group system parking floors. The swing car shall remain under group system control during emergency recall situations such as fire service operation and emergency power operation.

Swing cars are sometimes required to operate in more than one group such as low rise, high rise, passenger and service groups. The controllers shall be capable of being configured to meet this requirement.

Custom Software

Optional - Custom software may be written to meet project specific requirements. Consult MCE Sales Engineers for information and pricing.

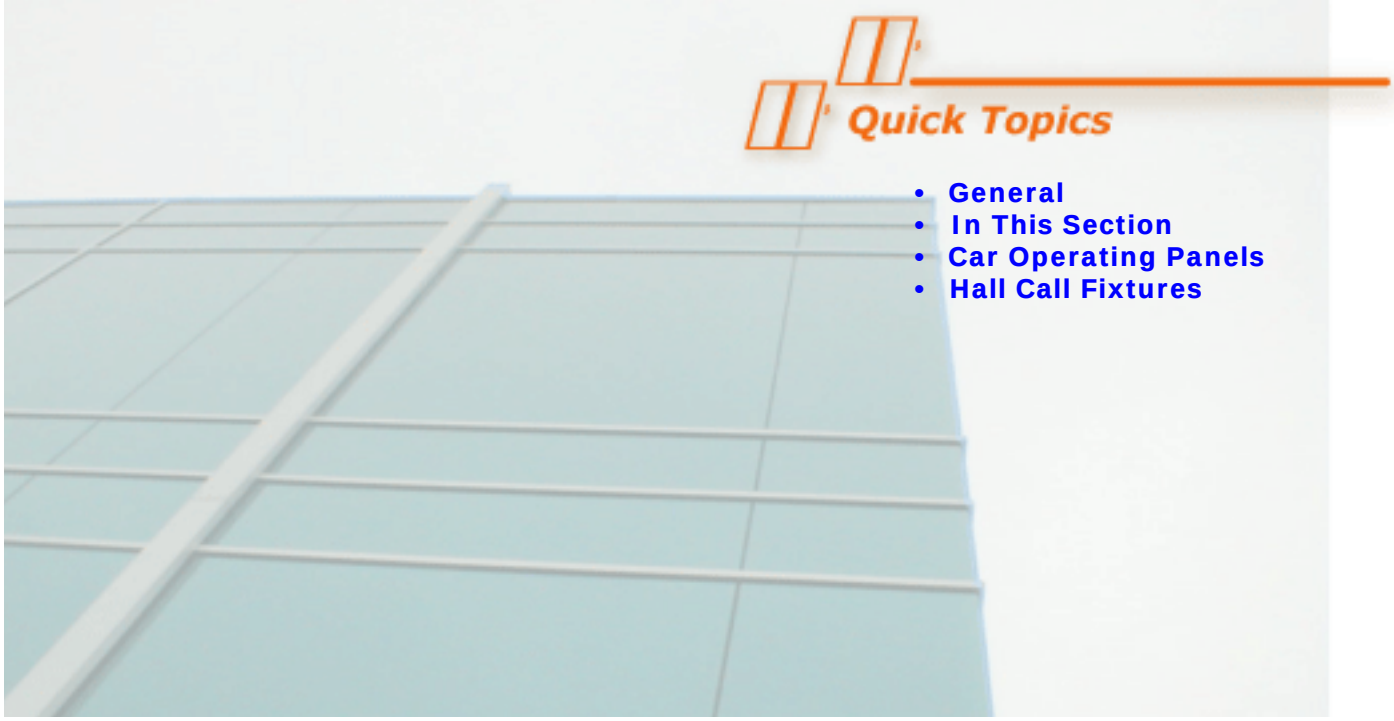

SmartLINK Serial Communication

General

MCE SmartLINK Serial Communication options include SmartLINK Serial Communication for Car Operating Panel and SmartLINK Serial Communication for Hall Fixtures. Both systems are designed to reduce required wiring and thereby reduce labor and cost. Depending on project requirements, a consultant or contractor can choose these systems for the specific application.

In This Section

- Car Operating Panels
- Hall Call Fixtures

SmartLINK for Car Operating Panels

SmartLINK for Car Operating Panel (COP) provides simplified wiring, reduced installation time and elimination of heavy, multi-strand traveling cables. At the heart of SmartLINK for COP is LonWorks® networking technology from Echelon®, integrating advanced semiconductor, communications and networking technologies using reliable Neuron® chips and transceivers.

With SmartLINK, a four-wire network conveys COP signals to the controller. The COP can have up to 64 front car calls, 64 rear car calls and 64 call lockout inputs. In addition, another 32 inputs and 32 outputs are available. Of the 32 available inputs, eight are standard. The other 24 are optional and are defined in a variable file.

SmartLINK Serial Communication for Car Operating Panel may be used with any MCE traction elevator controller (SCR, AC or MG) that is part of an M3 or AIM Group System.

Specification Text, Car Operating Panels

Car operating panel signals shall be conveyed to the controller using a four wire serial network. This network shall use LonWorks networking technology. The system shall have the capability to handle signals for up to 64 front car calls,64 rear car calls and 64 call lockout inputs. In addition, another 32 inputs and 32 outputs shall be available.

SmartLINK for Hall Fixtures

SmartLINK for Hall Fixtures uses a two wire bus to provide power to hall fixtures as well as two-way communication between the fixtures and the controller. Up to 98 floors, with up to 10 signals per floor, are supported. Node boards at each hall fixture provide power regulation to ensure constant lamp intensity. The system supports up to four buses to accommodate multiple risers and redundancy.

System diagnostics identify the location of most node or lamp failures. Overall system operation is unaffected by most node failures. A simple decimal floor addressing scheme, plus the ability to swap node boards with power on the bus, allows easy installation and maintenance. Robust circuitry using high voltage logic and low clock frequency provide EMI/RFI immunity, high ESD protection and minimal radio frequency radiation.

SmartLINK Serial Communication for Hall Fixtures may be used with any M3 or AIM Group System.

Specification Text, Hall Call Fixtures

Hall fixture signals shall be conveyed to the controller using a two wire bus. The bus shall provide power to hall fixtures as well as two-way communication between the fixtures and the controller. The system shall have the capability to support up to 98 floors and up to 10 signals per floor.

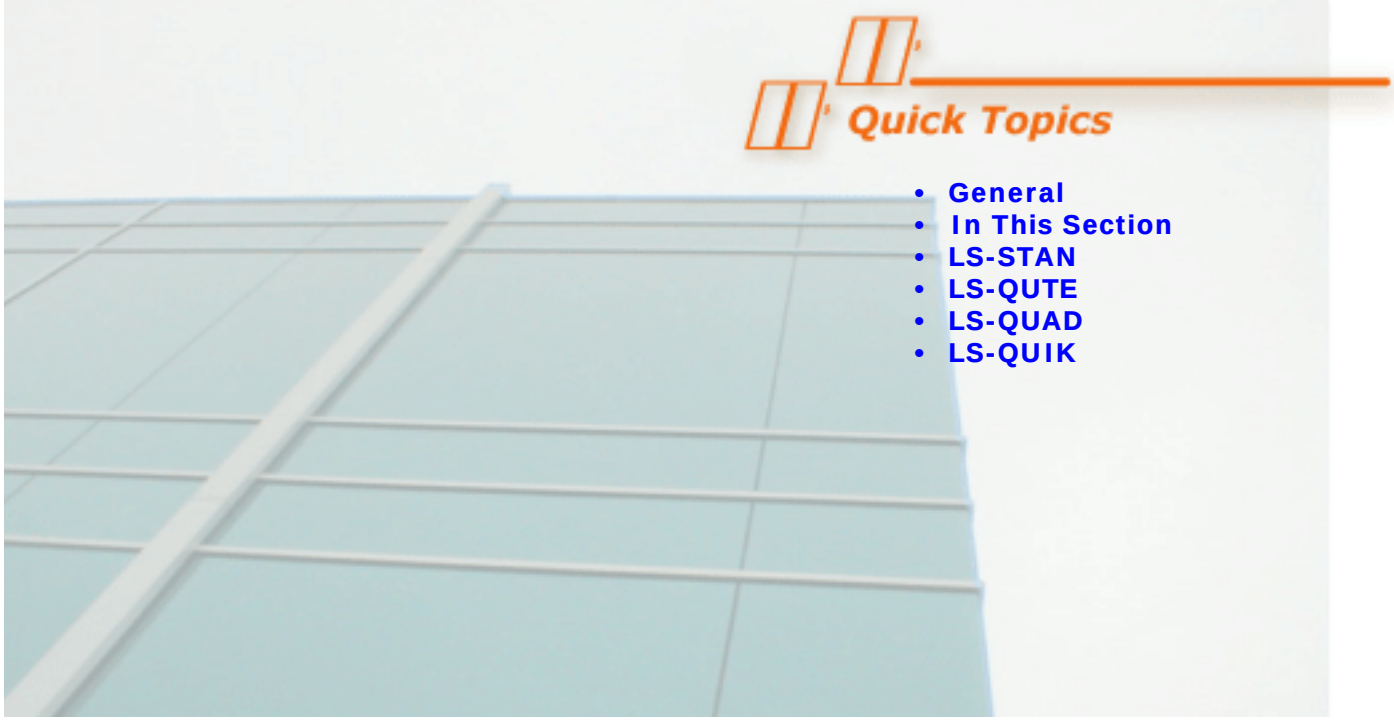

LS Landing Systems

11

General

Four landing systems are available, LS-STAN, LS-QUTE, LS-QUAD, and LS- QUIK. Depending on specified requirements, a consultant or contractor can choose the appropriate landing system for the specific application.

In This Section

- LS-STAN, Vane-Actuated
- LS-QUTE, Tape and Magnet
- LS-QUAD for IMC
- LS-QUIK for IMC

LS-STAN, Vane-actuated VS-1 Proximity Switch

This product can be used with any elevator control system that requires discrete and fixed slowdown distances. It can be used with all MCE control systems except IMC (Intelligent Motion Control), which requires the model LS-QUAD-2 or LS-QUIK landing systems.

The LS-STAN landing system uses MCE's model VS- 1 proximity switches actuated by vanes located in the hoistway. This landing system should not be used outdoors or in brightly lighted areas. Model LS-STAN5 is recommended for slower speeds and uses three lanes and five switches. Model LS-STAN7 is recommended for higher speeds, provides one-floor-run capability, and uses five lanes and seven switches. Other configurations are available to accommodate rear doors and other special applications. Consult your MCE Sales Representative for additional information.

Specification Text, LS-STAN

The hoistway landing system shall use model VS- 1 vane operated infrared optical switches to sense the position of the elevator in the hoistway. It shall provide stepping, leveling, door zone and floor encoding signals.

The vane switches shall be installed on a 14-gauge steel enclosure with adequate adjustment capability, and shall include labeled terminals for electrical interconnection.

The landing system shall include vanes and mounting hardware for vane mounting in the hoistway.

Switches shall be accurate to 0.0625" (1.59 mm) and the accuracy shall be the same regardless of direction of travel.

Switches shall not exhibit any interaction when arranged in any compact configuration.

Switch size shall allow horizontal spacing of lanes as close as 2" (50.8 mm), center to center.

LS-QUTE, Steel Tape and Magnetic Strips

This product can be used with any elevator control system that requires discrete and fixed slowdown distances. It can be used with all MCE control systems except IMC (Intelligent Motion Control), which requires the LS-QUAD-2 or LS-QUIK landing systems. The advantage of the LS-QUTE system is its ease of installation and the fact that it can be used in a brightly lighted area. Corrosion may result if the steel tape is installed in an environment that is high in moisture, salt or chemical vapors (stainless steel tape optional). Consult your MCE Sales Representative for additional information.

Specification Text, LS-QUTE

The landing system shall provide high speed stepping signals, one-floor-run stepping signals, leveling and door zone signals and optional floor encoding signals. Each output signal shall be electrically isolated and shall be capable of reliably operating at 120 VAC.

The system shall consist of a steel tape with mounting hardware to accommodate the complete travel of the elevator, a car top assembly with tape guides and sensors and magnetic strips for stepping, leveling and floor encoding.

LS-QUAD-2 for IMC

Recommended Use - This landing system is to be used for premium control systems that require precise knowledge of the position of the elevator for feedback purposes such as IMC (Intelligent Motion Control). The LS-QUAD-2 can be used for car speeds up to 800 fpm and travel of less than 300 feet. Corrosion may result if the steel tape is installed in an environment that is high in moisture, salt or chemical vapors. Consult your MCE Sales Representative for additional information.

Specification Text, LS-QUAD-2

The hoistway landing system shall be designed to provide the controller with precise information as to the absolute position of the car in the hoistway. With the car at a landing, the landing system shall indicate to the controller the actual floor number, so that movement to terminal landings or specific floors shall not be necessary to establish car location.

A perforated steel tape with holes on 0.75" (19 mm) centers shall be used with dual sensors to provide a quadrature signal to read the position of the elevator with accuracy of 0.1875" (4.76 mm) resolution over the entire length of the hoistway.

Leveling and door zone signals shall be provided using magnetic strips on the tape.

Magnetic strips on the tape and sensors shall be provided to give a binary coded floor position with parity check each time the car stops at a floor.

Optional - A version of the landing system shall be available which provides all necessary circuits for any arrangement of rear doors. This version shall not require additional tapes in the hoistway and the enclosure dimensions shall be identical to the conventional (non-rear door) version.

LS-QUIK for IMC

This landing system is to be used for premium control systems that require precise knowledge of the position of the elevator for feedback purposes such as IMC (Intelligent Motion Control). The LS-QUIK is recommended for car speeds over 800 fpm or travel greater then 300 feet or where steel tape is not recommended. Consult your MCE Sales Representative for additional information.

Specification Text, LS-QUIK

The hoistway landing system shall be designed to provide the controller with precise information as to the absolute position of the car in the hoistway. When the car is at a landing, the landing system shall indicate the actual floor number to the controller. As a result, movement to terminal landings or specific floors shall not be necessary to establish car location within the building.

A car top mounted, wheel driven encoder shall be used. The encoder shall provide a quadrature signal to read the position of the elevator with accuracy of 0.1875" (4.76 mm) resolution or better over the entire length of the hoistway.

Leveling, door zone and floor encoding signals shall be provided by using a single floor mounted vane coupled with VS-1 sensors.

Optional - A version of the landing system shall be available which provides all necessary circuits for any arrangement of rear doors.

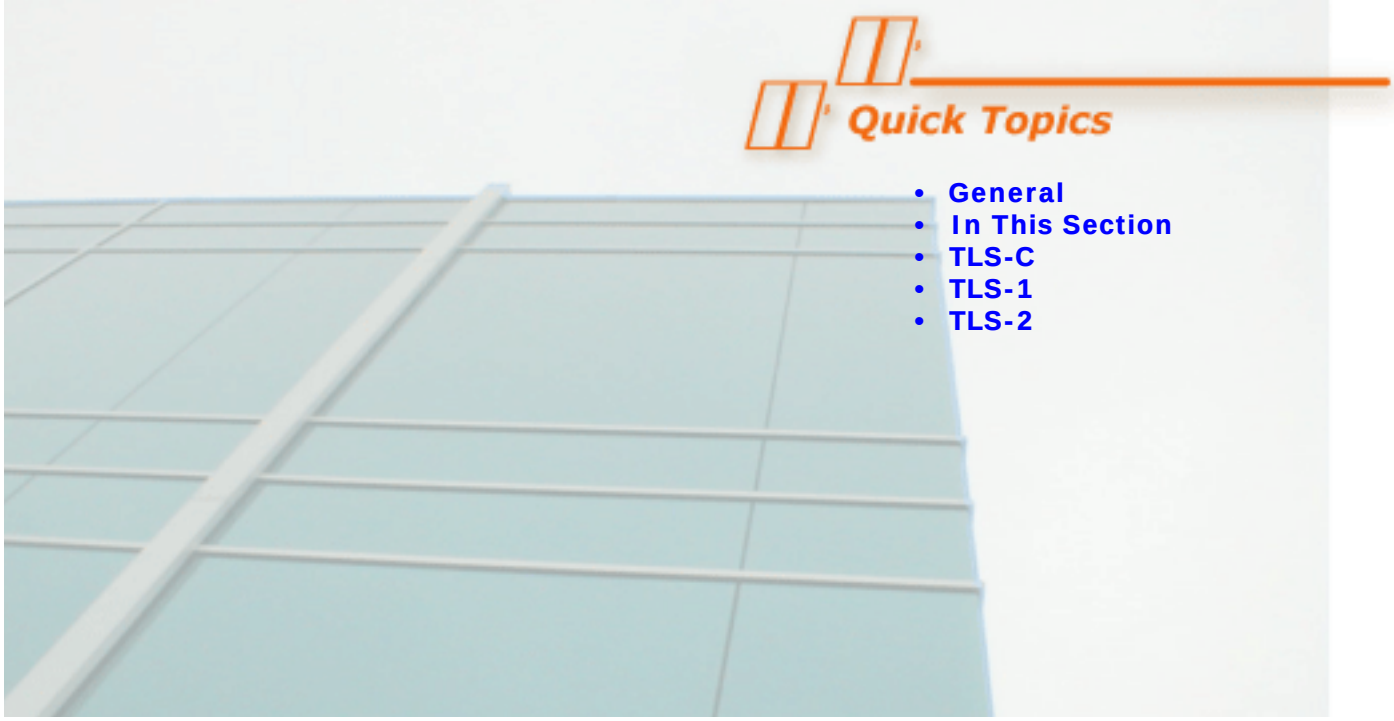

TLS Terminal Limit Switches

12

General

The TLS Terminal Limit Switch System consists of highly accurate, magnetically activated switches and actuating magnets. The system is designed specifically for computer-based elevator control systems requiring reliable contacts at speeds up to 2,000 fpm (10 m/s).

The TLS system provides reliable operation with clearances up to 3/4 inch (19mm), maintaining a high level of accuracy over the complete range of car movement. An ideal alternative to old-style mechanical TM switches and contacts, TLS eliminates noisy rollers and cams, cumbersome lever arms and the necessity for regular adjustment and cleaning.

Three models of TLS Terminal Limit Switches are available, TLS-C, TLS-1 and TLS-2. This system can be used for Normal Terminal Slowdown Device, Emergency Terminal Stopping or Speed Limiting Device, Access Limit and Earthquake Car-to Counterweight Switch. Depending on project requirements, a consultant or contractor can choose a system for the specific application.

In This Section

- TLS-C
- TLS-1
- TLS-2

TLS-C Recommended Use

TLS-C Cartop Terminal Limit Switch System consists of a cartop mounted, magnetically activated switch array with rail-mounted actuating magnets. There are two models available, TLS-C-12 (with 12 switches) and TLS-C-16 (with 16 switches). The switches are in an enclosure designed to be mounted on the cartop, with each switch operated by a magnetic actuator installed on a bracket with adjustable channel which is mounted to the guide rail. The number of magnetic actuators is equal to the number of switches, which is also equal to the number of lanes. The switches are mounted on 1 5/16" centers in easily replaceable modules of four switches per module. This system is designed specifically for computer-based traction elevator control systems with car speeds up to 2000 fpm (10 m/s).

Specification Text, TLS-C

The terminal limit switches shall consist of an array of magnetically activated switches and corresponding actuating magnets. The switch array shall be mounted on the cartop and the actuating magnets shall be mounted to the guide rail. Mounting brackets for the magnetic actuators shall be supplied by the manufacturer. The switches shall have hermetically sealed contacts with tolerance for high temperature and humidity. The switches shall be direction-dependent with bi-stable memory. The number of switches required, based on the speed of the car, shall be determined by the manufacturer.

TLS-1 Recommended Use

TLS-1 Terminal Limit Switches are individual hermetically sealed units. Each switch is installed on its own bracket in an adjustable channel mounted to the guide rail. The magnetic actuator is installed on a bracket with an adjustable channel mounted to the cartop. The switches are arranged in a single vertical lane in the hoistway and therefore only one magnetic actuator is required. TLS-1 can be used for traction elevators up to 1600 fpm (8.13 m/s).

Specification Text, TLS-1

The terminal limit switches shall consist of magnetically activated switches and an actuating magnet. The switches shall be mounted to the guide rail and a single magnetic actuator shall be mounted to the cartop. Mounting brackets for the switches and magnetic actuator shall be supplied by the manufacturer. The switches shall have hermetically sealed contacts with tolerance for high temperature and humidity. The switches shall be direction-dependent with bi-stable memory. The number of switches required, based on the speed of the car, shall be determined by the manufacturer.

TLS-2 Recommended Use

TLS-2 Terminal Limit Switches are individually hermetically sealed units. The switches are installed side-by-side on a bracket with adjustable channel mounted to the car top. The magnetic actuators are installed on brackets with an adjustable channel mounted to the guide rail. The number of magnetic actuators is equal to the number of switches, as the switches are not in a single lane. The switches can be mounted on 3 ½" centers. Because of the width of the mounting brackets, the practical maximum for this model is three switches. TLS-1 is typically used in conjunction with other slowdown devices and can be used for traction elevators up to 1600 fpm (8.13 m/s).

Specification Text, TLS-2

The terminal limit switches shall consist of magnetically activated switches and corresponding actuating magnets. The switches shall be mounted to the cartop and the magnetic actuators shall be mounted to the guide rail. Mounting brackets for the switches and magnetic actuators shall be supplied by the manufacturer. The switches shall have hermetically sealed contacts with tolerance for high temperature and high humidity. The switches shall be direction-dependent with bi-stable memory. The number of switches required, based on the speed of the car, shall be determined by the manufacturer.

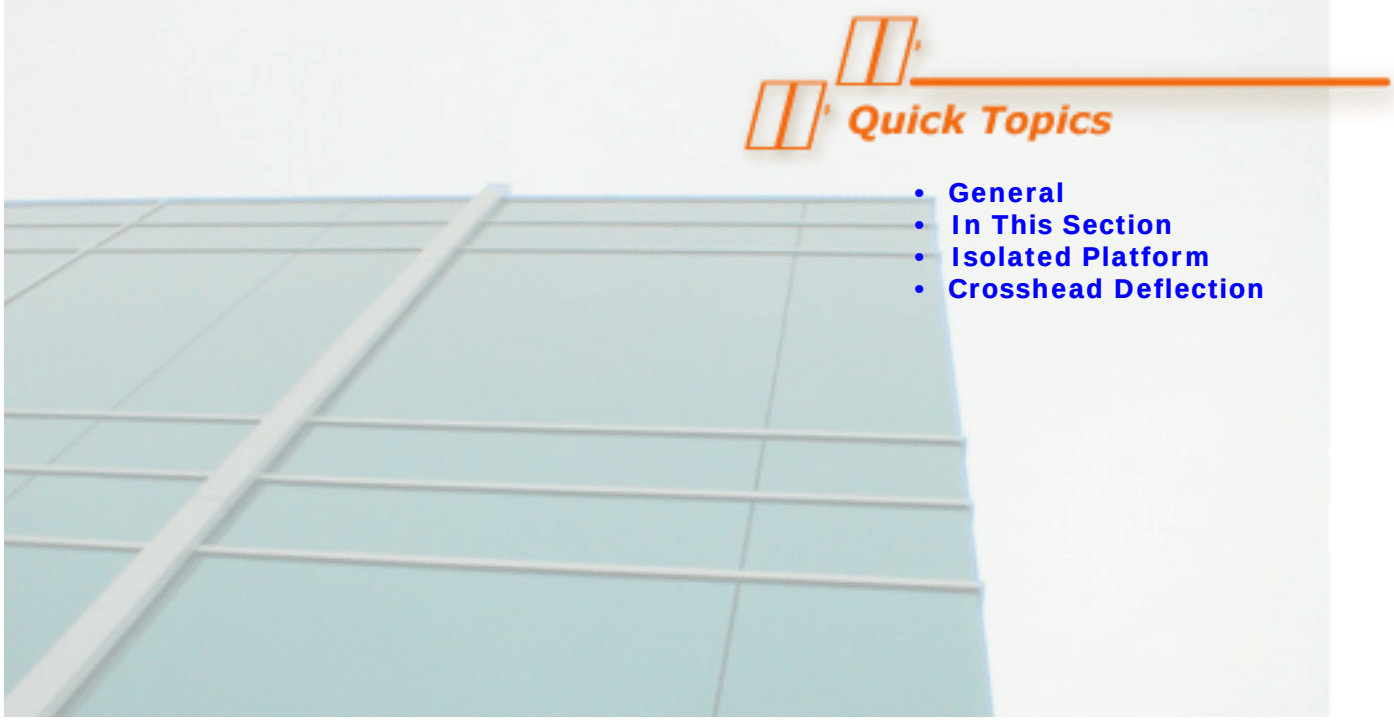

Load Weighers

13

General

A load weigher can be used for gearless or geared elevators to provide signals for various load dispatching operations and for pre-torquing with IMC controllers.

By identifying the load (light, heavy or overload), the system can activate anti-nuisance car call cancellation, loaded car hall call bypass, lobby up peak mode or overload. For dispatching, a load weigher can be used with all MCE controllers

For IMC Performa, IMC-SCR and IMC-MG, the load weigher signal can be used to adjust the amount of torque produced by the motor as the brake lifts to provide smooth starts. Every time the car leaves a floor, a new pre-torque value is computed based on how the car is loaded, ensuring that every start is the smoothest possible.

Depending on project requirements, a consultant or contractor can choose this system for the specific application.

In This Section

- Isolated Platform
- Crosshead Deflection

Isolated Platform

The isolated platform load weigher is recommended for installations with isolated platform elevator cars that require anti-nuisance, lobby dispatching, load bypass and/or overload. Pre-torquing is available for IMC PERFORMA, IMC-SCR and IMC-MG controls.

Specification Text, Isolated Platform Load Weigher

The load weigher shall consist of an inductive proximity switch and an amplifier. The amplifier output shall be connected to the machine room via two conventional wires (special wiring is not required). The output circuit shall be virtually impervious to damage from transients or accidental connection to voltages up to 120 VAC. A controller-mounted input buffer board and software are required in order to process the signal from the load weigh system.

The proximity switch and amplifier shall be mounted either under the car (preferred position), or on top of the car. When mounted under the car, a voltage signal is generated that is inversely proportional to the distance between the bottom of the car floor and the isolated platform frame. When mounted on top of the car, a voltage signal is generated that is proportional to the distance between the crosshead and the top of the cab.

Electrical requirements: Input 120 VAC, single phase 50Hz/60Hz, Output 10mA @ 18VDC.

Crosshead Deflection

A crosshead deflection load weigher is required for installations with non-isolated platform elevator cars.

Specification Text, Crosshead Deflection Load Weigher

The load weigher shall consist of load sensor(s), amplifier(s) and a buffer board. The buffer output shall be connected to the machine room via two conventional wires (special wiring is not required). The output circuit shall be virtually impervious to damage from transients or accidental connection to voltages up to 120 VAC.

The sensor(s) shall be mounted to the crosshead to measure deflection as the elevator is loaded. The voltage signal generated is directly proportional to the deflection of the crosshead. The amplifier(s) and buffer board are mounted on the cartop.

Electrical requirements: Input 120 VAC, single phase 50Hz/60Hz, Output 10mA @ 18VDC.

CMS Central Monitoring System

General

CMS Central Monitoring System for Windows® is a comprehensive elevator management tool for institutions, contractors, building managers and owners with many elevators in the same building, in multiple buildings in the same city or even in different cities. CMS provides interactive monitoring and control for elevators. Emergency conditions or events are immediately displayed on the system monitor, maintenance personnel are notified via digital pager activation and a hardcopy is printed. CMS can be used as a data acquisition and adjustment tool and allows monitoring of selected events, emergency reports, analysis of elevator system performance, as well as the retrieval of other system information from a designated central location.

CMS elevator monitoring system consists of following subsystems:

- Central Monitoring System (CMS)
- Embedded Monitoring Interface (EMI)
- Communication Network (CN)
- Security Interface Software (SIS)

In This Section

- CMS for Windows
- CMS Hardware
- CMS Functional Spec
- Relational Database
- Monitoring Interface
- Communication Network

CMS Central Monitoring System for Windows®

CMS is an interactive Microsoft Windows® based system that runs on an IBM-compatible personal computer (PC). CMS can be used for elevator modernizations as well as new installations. CMS can be connected to an MCE microprocessor-controller.

IMC controls with an M3 Group System offers the most extensive range of data retrieval and monitoring options. For other types of control systems, the level of available monitoring is dependent on the memory capacity of the controller microprocessor and its on-line status with the monitoring system. Please contact your MCE Sales Representative for details.

CMS General Specifications

The Central Monitoring System shall monitor the elevators attached to the system. When an elevator shutdown occurs, the elevator system shall initiate an emergency call to the elevator command center. The Central Monitoring System shall receive and process any emergency call by displaying the event on the monitor screen, sending a message to a pager, and printing the event on a designated printer.

While connected to the elevator system, the Central Monitoring System shall download and collect available data, which is organized in a database. This software shall provide easy-to-use pull-down menus, using the Microsoft Windows® based operating system, allowing the user to monitor and review the elevator performance database in various formats.

CMS shall also provide menus for monitoring the elevator system and where applicable, for altering various elevator system parameters. The individual user's interaction level with the system shall be defined by the monitoring system manager.

CMS Hardware

The Central Monitoring System shall be installed at a location appropriate to monitor all designated control systems. The CMS hardware shall consist of a personal computer (PC), monitor, printer, keyboard, and mouse. It shall contain all the appropriate internal and externally connected peripheral equipment necessary for that purpose.

Elevator Command Center Computer - Minimum requirements for CMS

IBM compatible PC with:

- Pentium 233MHz Processor (Recommend 1.6GHz)
- 32 MB RAM (Recommend 512MB or greater)
- 1 GB hard disk (Recommend 20 GB or greater)
- RS232 Serial ports (2 or more)
- Parallel port
- 3.5" floppy disk drive
- CD-ROM Drive
- SVGA card
- SVGA monitor
- Parallel printer with cable (compatible with Microsoft Windows® 98SE, 2000, or XP)

CMS Connection Media Options

- Modem Connectivity: 1 or 2 modems at the PC. Phone lines (analog) required. (Recommend 2 modems, one for normal connectivity and one for receiving emergency events.)
- Line Driver Connectivity: 2 Line drivers, one at each end of the communication string. (Wire connection, good for up to 2 miles.)
- Ethernet Connectivity: Requires Ethernet Terminal Servers at each controller connection (group, simplex, duplex) and one at the designated CMS Station.
- Serial Connectivity: Serial cable at controller.

CMS Functional Specifications

Graphical User Interface - Central Monitoring System shall run under the Microsoft Windows® operating system. The user interface shall be based on the standard Windows interface and shall be similar to other Windows®' programs. If the user knows how to use other Windows' programs, he or she essentially knows how to use the monitoring system user interface.

While online with the controller, the Central Monitoring System shall provide various real-time display screens for system monitoring and diagnosis.

Online Help - The Central Monitoring System shall provide a complete and comprehensive online help system. A context-sensitive help program shall be provided to give the users hints and explanations of the current task.

Summary - This menu shall give a brief description of the system, including the job number, job name, number of cars, number of landings, number of openings per landing for each car, car labels, landing labels, fire service options, serial communication port definitions and other system options.

Individual Car Flags - This screen shall display a list of the selected car's internally generated computer flags for diagnostics.

Graphic Hoistway Display - The Central Monitoring System shall display the elevator system hoistway. That is, users shall be able to view a graphical representation of the elevator hoistway.

The graphic hoistway display shall include, but is not limited to, the following:

- Simulated Hoistway and Car Configuration
- Individual Elevator Position
- Individual Elevator Car Calls
- Individual Elevator Direction
- Individual Elevator Door Position
- Individual Elevator Status of Operation
- Individual Elevator Communication Status
- Registered Up and Down Hall Calls
- Controller Real-Time Clock Date and Time
- M3 Group Mode of Operation
- Estimated Time of Arrival (M3 only)
- Assigned Hall Calls to Individual Elevator (M3 only)
- Hall Call Waiting Time Per Registered Hall Call (M3 only)
- Remote Registration of Car and Hall Calls (M3 Only)

System Control and Adjustment (M3 and AIM only) - While online, the software shall provide various display screens for parameter adjustments.

System Parameter Menu - This menu shall allow the user to view and alter various M3 group system parameters including:

- Parking Floors and Their Priorities
- Hall Call Priority Times Per Landing
- Parking Floor Delay Time
- Parking Reassignment (Shuffle) Delay Time
- Group Mode of Operation
- Parameters Which Define Each Mode of Operation
- Parameters For Lobby Up Peak Operation
- Parameters For Traffic Identification
- Time Actuation of Programmed Group Configurations
- Change Lobby Floor or Invocation of Dual Lobby Operation

Individual Car Parameters Menu - This menu shall allow the user to view and alter various individual car parameters.

- Door Dwell Times
- MG Shut Down Time (If Applicable)
- Time Out of Service Time, Nudging Time
- Calculated Car Times (Not Adjustable): Door Opening Time, Door Closing Time, Through Time, Deceleration Time.

Emergency Notification - In case of elevator shutdown or any other designated emergencies, any attached elevator system shall automatically initiate a call to the Elevator Command Center. The ECC shall be capable of receiving the call, processing the data and routing the received data to the proper storage or output device (computer monitor, hard drive or printer). The system shall have the ability to page designated personnel to notify them of an emergency event.

The ECC shall always be in a ready state to answer an incoming call from any monitored elevator system. This will require the system to have more than one dedicated phone line and modem. (If modem connectivity is chosen.) The ECC shall store, in the database, a chronological listing of the emergency reports received from each monitored elevator system. The user shall be able to view or print these reports.

Pager Support - A programmable option shall be available to send a coded message to a technician's digital pager when the Elevator Command Center receives an emergency event notification. The system manager shall be able to select the active pagers and shall be able to program paging to be active based on a time schedule.

Programmable Events (M3 Release 4 products only) - The Central Monitoring System shall provide support for predefined and programmable events. System users shall be able to program the elevator controllers for the events to be monitored. Events shall be programmable to be stored in a controller file or be sent to the Elevator Command Center as an emergency event or both. The user shall be able to define the desired events from a list of controller specific inputs and outputs.

CMS Reports

The Central Monitoring System shall provide historical and performance reports for all attached M3 Group Systems. For other controllers, a limited number of reports (the first four in the list below) are available at all times; any additional reports require the controller to be continuously online. While viewing the reports, users shall be able to sort and select data to display the information in which they are interested. In addition to the predefined reports, the Central Monitoring System shall allow users to create customized reports. Reports shall be displayed in graphical and tabular formats. The graph type reports (bar graph, line graph and pie chart) shall be user configurable. Users shall be able to print the available reports. The reports, which are a function of the type of controller being monitored, shall include the following: hall call, car call and miscellaneous reports.

Average Wait Time Per Time and Direction (Graphical) - This report shall graphically display the hall calls average wait time per time and in each direction for the selected time period.

Number of Hall Calls Per Time and Direction (Graphical) - This report shall graphically display the number of hall calls per time and in each direction for the selected time period.

Group System and Car Controller Faults/Events Report - This report lists all the events generated by the group system and car computers. The report shall list the date and time each event has occurred along with a description of the event and its status. System users shall be able to display this report for multiple elevator systems, for particular events, for specific date and/or time.

Emergency Faults/Events Report - For a selected time period, this report shall provide a listing of the emergency events received by the Elevator Command Center. Users shall be able to display the report for multiple jobs, for particular emergency events, specific date and/or time and a specific car. The report shall also provide, for the selected time period, summary information such as the job with most emergencies, car with most emergencies and floors with most emergencies.

Hall Call Response in 15 Second Intervals (Tabular) - This report shall show the response to all hall calls registered for a particular elevator system. This report shall show the percentage of calls responses in 15 second intervals up to 90 seconds, and then greater than 90 seconds.

Hall Call Distribution (Tabular) - This report shall list all the hall calls registered for a particular elevator system for a selected time period. The list shall include, for every hall call, registration date and time, assigned car, car door (front or rear), floor where the call was registered, hall call direction (up or down), hallway (main or auxiliary) and wait time. The report shall also provide, for the displayed time period, a summary of the most used car, most used floor, total number of calls, average wait time, minimum wait time and maximum wait time.

Hall Call Performance (Tabular) - This report shall list, for every floor and in each direction (up and down), number of registered calls, average wait time, maximum wait time and minimum wait time.

Number of Hall Calls Per Landing and Direction (Graphical) - This report shall graphically display the number of hall calls for every landing, in each direction (up and down), for the selected time period.

Average Wait Time Per Landing and Direction (Graphical) - This report shall graphically display the hall calls average wait time for every landing, in each direction, for the selected time period.

Number of Hall Calls Answered Per Car (Graphical) - This report shall graphically display the number of hall calls answered by each car in the system for the specified time period.

Percent of Up and Down Hall Calls (Graphical) - This report shall graphically display the percentage of calls in the up and down directions for the selected time period.

User Customized Hall Call Reports (Tabular and graphical) - Users shall be able to construct tabular or graphical hall call reports from a list of stored data available in the database.

Car Call Distribution (Tabular) - This report shall list all car calls registered for a particular job for a selected time period. The list shall include, for every car call, registration date and time, assigned car, source and destination floors, door (front or rear) and travel time. The report shall also provide for the selected time period, a summary of the most active car, most traveled-from floor and most traveled-to floor.

Car Call Performance (Tabular) - This report shall list, for every car in the system, number of calls, average travel time, minimum travel time and maximum travel time. The user shall be able to select the display time period.

Number of Car Calls per Car (Graphical) - This report shall graphically display the number of car calls per car in a selected time period.

Number of Car Calls Per Landing (Graphical) - This report shall graphically display the number of car calls to every floor for a selected time period.

Average Travel Time Per Car (Graphical) - This report shall graphically display the average travel time for every car for a selected time period.

Average Travel Time Between Source and Destination (Graphical) - This report shall display, for a selected time period, the average travel time between the source and destination for each car.

User Customized Car Call Reports (Tabular or Graphical) - Users shall be able to construct tabular or graphical car call reports from a list of the stored data available in the database.

Access Control for Elevators Reports (Optional) - Several reports shall be available for the Access Control for Elevators (ACE) security. These reports shall display passenger information, secured car calls, hall call and car call security configurations. For details about Access Control for Elevators, refer to Section 14 and to the Elevator Security User Guide, 42-02-S024.

Relational Database

The system shall be programmable to automatically collect data from all the monitored elevator systems and update the database.

The system shall provide a multiple level of password protection for the usage of the system.

The system shall include a built-in relational database. All data collected from the monitored elevator systems shall be stored in the database. Incorporating the relational database shall allow the system to offer numerous search methods and selection criteria for viewing collected data.

Different elevator systems may be attached to the system. Consult your MCE Sales Engineer for details.

Embedded Monitoring Interface (EMI)

For controllers manufactured by MCE, all the necessary interface to the Central Monitoring System is embedded in the elevator control system. Specify the embedded interface for MCE controllers by requiring the CMS option for each controller. Any existing MCE controller can be upgraded to include the embedded interface.

Communication Network

Different communication networks can be used to allow an Embedded Monitoring Interface (EMI) to communicate with the CMS station. The most popular means of communication are phone lines using modems, hardwiring using line drivers or Ethernet with built in device servers installed in the controls. Device servers require a 10Base-T connection to a computer network supporting TCP/IP protocol.

CMS can be modified to meet customized communication network requirements. Consult your MCE Sales Representative.

SIS, Security Interface Software

SIS is designed to allow the CMS user to remotely access and manipulate the elevator system security software. This is a Windows-based software that allows security manipulation using a PC mouse (point and click). This is true whether the customer has standard elevator security CRT or the more enhanced Access Control for Elevators (ACE).

Elevator Security

General

Several elevator security options are available for MCE Controllers.

In This Section

- Basic Security
- Basic Security with CRT
- Access Control for Elevators (ACE)
- Security Interface System
- Additional Security Options

15

Basic Security

Basic Security provides a means to prevent unauthorized registration of car calls. Basic Security allows access only to the floor(s) for which a person is authorized. Exiting from the building shall not be restricted. Basic Security is available on all MCE elevator car controllers, simplex, duplex and group.

The basic security system shall allow either unrestricted or restricted access to any floor or combination of floors controlled by the elevator security system. The floor security codes shall be programmable. The system shall be placed in the security mode by a single input to the microcomputer system, such as from a key switch, time clock, etc.

Basic Security with CRT

Basic Security with CRT provides a means to prevent unauthorized registration of car calls and/or hall calls. Basic Security with CRT allows access only to the floor(s) for which a person is authorized. Access to elevators from specific landings can also be restricted. Basic Security with CRT is available on all M3 Group Systems and most simplex and duplex systems (consult your MCE Sales Representative).

Basic Security with CRT shall allow either unrestricted or restricted access to any floor or combination of floors controlled by the elevator security system. The floor security codes shall be programmable. The system shall be placed in the security mode by a single input to the microcomputer system, such as from a key switch, display terminal or software timer table. The system shall allow the user to program car calls to be secured on a per floor basis. The user shall be able to program up to eight different configurations and the corresponding time schedule. While in security mode, all elevators shall park at the lobby in order to prevent unauthorized access to a floor where an elevator might otherwise park.

The security mode shall render all car call buttons inoperative, except those for floors that have unrestricted access. Anyone desiring to go to a restricted floor may enter the elevator from any floor by means of a hall call. A sequence of numbers must then be entered on the car operating panel by using the normal car call pushbuttons. If the sequence is correct, the desired call lamp shall light and the car shall proceed to that floor. If the sequence is incorrect, the call shall not register. The sequence may be reinitiated at any time.

The sequence shall begin with the destination floor button. That button shall begin to flash on/off after it has been pressed. The rest of the sequence shall consist of a series of up to a maximum of eight numbers. If a sequence is not recognized, the memory shall be cleared automatically and the person who entered the improper sequence shall be denied access.

Access Control for Elevators

"ACE" Access Control for Elevators is MCE's premier elevator security system. ACE offers the most sophisticated programming capability. ACE provides a wide range of options allowing building owners and managers the greatest flexibility of any elevator security system available today. ACE has passenger access codes which may be distributed to allow only authorized passengers access to building floors.

ACE has multiple security configurations including car call access on a per passenger and/or per floor basis. The sophisticated software of ACE also provides access control for car and hall calls.

ACE is available for IMC Performa, IMC-SCR and IMC-AC simplex car controllers and all M3 Group Systems. ACE is programmable through a machine room CRT terminal or an IBM compatible PC running Security Interface Software (SIS). For the availability of ACE on other controller types, consult your MCE Sales Representative.

System Access Control

The system shall provide access control, featuring comprehensive programming of the access level for the entire elevator call system. Each hall call, as well as each car call, shall be individually programmable for access.

When using access control, every floor can have its own unique access schedule which shall be completely independent of the access schedule for any other floor in the building. ACE shall also allow the programming of many other functions such as groups of calls by floor, levels of access, weekly schedules and so forth.

Levels of Access Control

Locked - Passengers in any elevator car serving a locked floor shall not be able to register car calls to that locked floor. Optionally, anyone in the elevator lobby on a locked floor shall not be able to register a hall call (up or down) to bring an elevator car to that locked floor. Any hall or car calls registered for a floor when it becomes locked shall immediately be canceled.

Unsecured - Passengers shall be able to access any unsecured floor from any car or hall call without restriction.

Secured - Only passengers with an authorized access code shall be able to register a car call to a secured floor.

Hall Call Control

Hall calls on each floor shall be set to either locked or unsecured. If a hall call for a particular floor, direction (up or down), side (front or rear) and for a particular hallway pushbutton riser (main or auxiliary) is set to locked, then no one shall be able to register that hall call.

If a hall call is set to unsecured, then the hall call shall be registered without restriction.

Car Call Control

Car calls may be set to one of three states: locked, secured, or unsecured. If a car call for a particular floor and a particular side (front or rear) is set to locked, then no one shall be able to register that car call.

If a car call is set to secured, then only passengers with a proper access code shall be able to register that car call.

If a car call is set to unsecured, that car call shall be registered without restriction.

Access Control Resolution

At the highest resolution, the user shall be able to control access on a per button basis. This means that every single call button in the system shall be programmable and have its own unique access schedule. The system shall also include the flexibility to allow the user the option of combining or grouping calls together, which allows access control at a lower resolution and makes the job of programming and maintenance more manageable. Additionally, the user could combine every single car call and hall call in the system into a single combined call. When that combined call is locked, all calls in the whole system shall be locked. When that call is unsecured, all calls shall be accepted without restriction.

Access Control Programming

The access control programming feature shall allow the user to program the level of access to be in effect on specific days of the week and time of day. As an example, a user may wish to lock certain floors on weekends, while other floors may be unsecured on weekends. A user shall be able to program access via eight security configurations and a programmable security configuration timer table. When the time of the event occurs, the event program shall automatically secure the building in the manner desired.

Car Station Keypad

The system shall provide car call access by using the car pushbutton station(s) as a keypad to allow authorized passengers to enter their access code. When the access system is activated, access codes must be used to register calls to any floor that has been designated as a secured floor.

Passenger Access Control

The passenger access security feature shall provide car call security for each elevator in the system to any secured floor on an individual passenger basis by using unique individual passenger access codes. The passenger shall use the car call buttons available in each car to register the appropriate passenger access code required to go to a floor.

Each passenger shall have their own unique passenger access code, and may be authorized to have access to a single floor or many different floors by assigning accessible floor number(s) in the individual's data file. Time restrictions may also be assigned to an individual passenger to restrict access during certain time periods.

The passenger data file shall include a passenger ID (name), unique personal access code (number), authorized floor destinations and authorized time window(s).

Floor Access Control

The floor access security feature shall provide car call security for any secured floor. Access codes can be assigned on a per floor basis giving each floor a different access code or, if desired, the system shall allow a single access code to be assigned to more than one floor.

Any passenger with the proper access code shall be permitted to register a car call for that floor. The passenger shall use the car call buttons in each car to register the appropriate access code. The access code assigned to a floor shall be used by all passengers going to that floor.

User Interface

The user shall have limited system access through a machine room CRT terminal or any remote extension of the machine room CRT terminal. The user shall be able to access the system through an IBM-compatible computer running Central Monitoring System (CMS) software and/or Security Interface Software (SIS).

The building manager or other authorized personnel with the appropriate system security password shall be able to program the system, view building access configurations (past, current and future), print reports and so forth.

Report Generation

A list of passengers who registered secured car calls shall be available on the CRT terminal and shall be sorted by time and date. The system shall store all events associated with the use of any individual passenger access code.

Reports shall be generated by an IBM-compatible computer running Central Monitoring System (CMS) software and/or Security Interface Software (SIS). Users with Security Interface Software (SIS) shall be able to select and sort the list of car calls to secured floors by date, time, source floor, destination floor, car number and passenger ID.

The user interface shall let the user see and print a report listing the time and date at which individual passengers accessed secured floors.

Software Switch

The software switch is a logical switch accessed through a machine room CRT terminal or an IBM compatible computer running Central Monitoring System (CMS) software and/or Security Interface Software (SIS). When the software switch is on, the building elevator access system shall be activated and when off, the system will be deactivated.

Specification Text, Special Operations

The access system shall be overridden in case of fire service. As an option, in the case of independent service, hospital service and other special operations, the system may or may not be overridden.

Security Interface System

Specification Text, Security Interface System, Optional

The capability shall be provided to view the status screens and program the security variables for Basic Security with CRT or Access Control for Elevators (ACE) security using an IBM compatible computer running Security Interface Software (SIS).

Additional Security Options

Specification Text, Central Monitoring, Optional

The capability shall be provided to view the status screens and program the security variables for Basic Security with CRT or Access Control for Elevators (ACE) security using an IBM-compatible computer running Central Monitoring System (CMS) software and Security Interface Software (SIS).

Specification Text, Card Reader Interface, Optional

A card reader interface shall be provided. The card reader vendor shall provide a dry contact output.

Specification Text, Floor Key Lockout, Optional

The control system shall be engineered to provide floor key lockout.

Physical Specifications

General

This section is intended to be used as a reference for physical specification of products described in this specification book. This section describes dimensions, weight, and special features of the enclosures and accessory products. The specifications given in this section are primarily for reference and may be changed or modified at any time without notice.

Note

Where space restrictions apply, multiple enclosures may be needed. Consult your MCE Sales Representative for special enclosure information.

16

In This Section

- Standard Controller Enclosures
- Landing System Physical Specifications
- Load Weighers
- TLS Terminal Limit Switches

Standard Controller Enclosures

MCE provides NEMA 1 type enclosures for its standard elevator controller products unless otherwise specified. NEMA 1 enclosures are intended for indoor use primarily to provide a degree of protection against contact with the enclosed equipment and against a limited amount of falling dirt. Following is a list of product types and typical enclosures used with each. The enclosures may be used interchangeably, depending upon application.

Hydraulic Enclosures

This enclosure is primarily used for PHC, HS and IOS control products. It is a steel enclosure with an aluminum or steel sub-plate, louvered sides, removable door and is wall mounted with front access only.

Figure 16.1 Hydraulic Enclosure

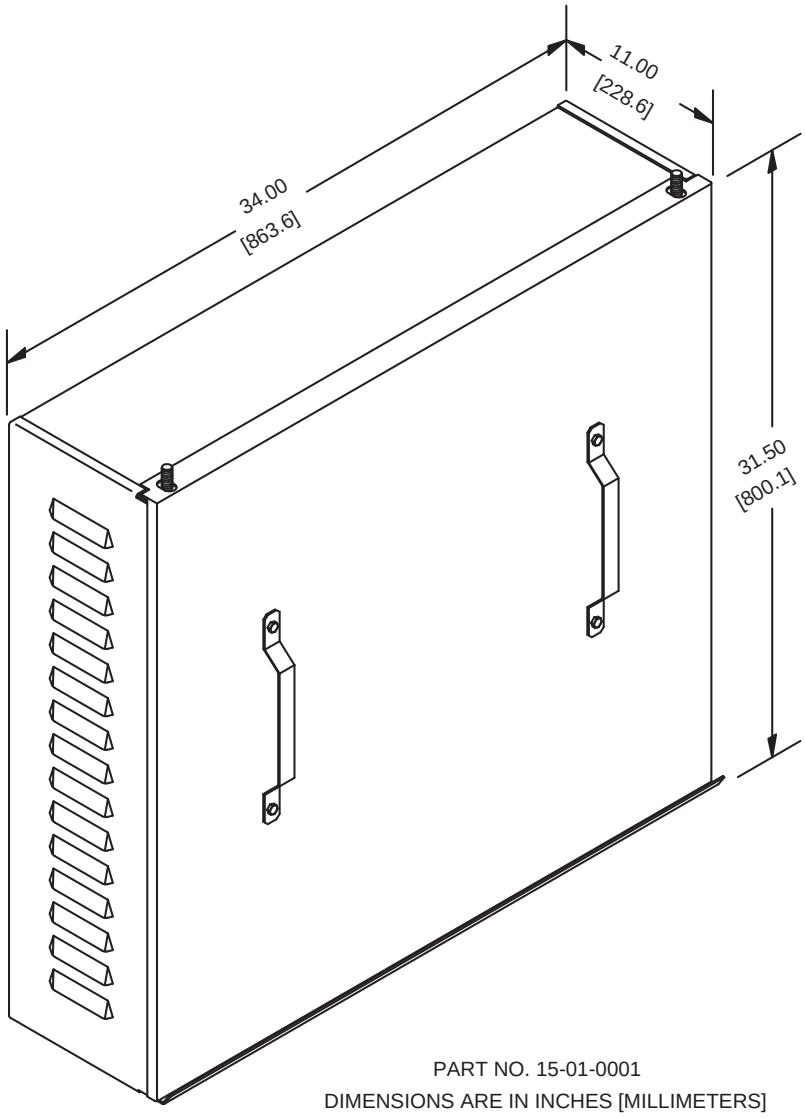

- Part Number: 15-01-0001 (See figure 16.1)
- Dimensions (inch [mm]): 31.5 [800. 1] H X 34 [863.6] W X 11 [279.4] D
- Weight full (lbs. [kg]): 135 to 200 [61.29 to 90.8] approximate (depends on product)

Figure 16.2 Hydraulic Enclosure

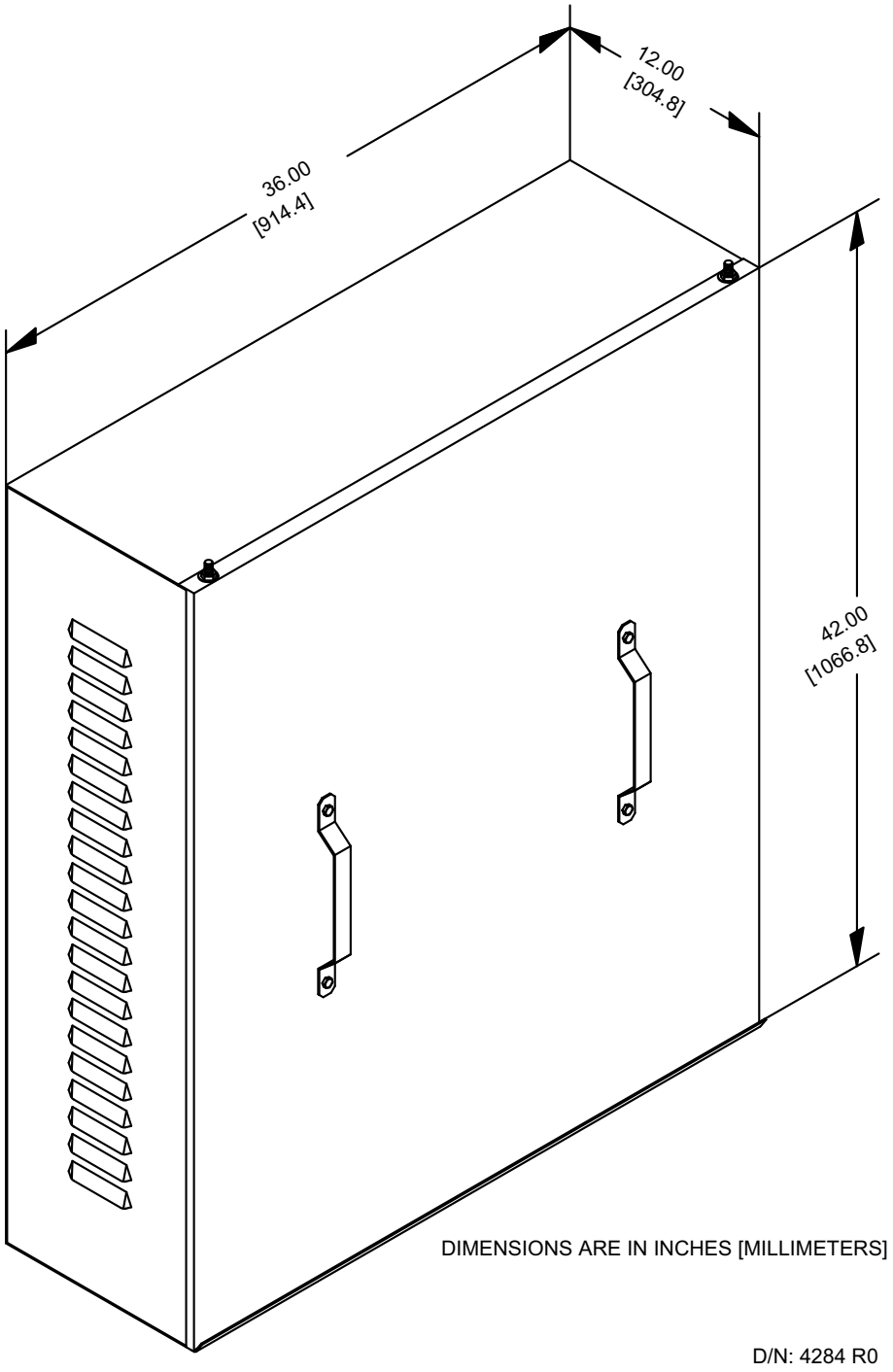

- Part Number: 15-09-0019 (Figure 16.2.)
- Dimensions (inch [mm]): 42 [1066.8] H X 36 [914.4] W X 12 [304.8] D
- Weight full (lbs. [kg]: 200-300 [90.7 - 136] approximate (depends on product)

Traction Enclosure (Series M)

This enclosure is used for PTC and VFMC Series M control products. It is a steel enclosure with an aluminum or steel sub-plate, louvered sides, removable vented resistor box (when required), removable door, and is wall mounted with front access only.

Figure 16.3 Traction Enclosure, Series M

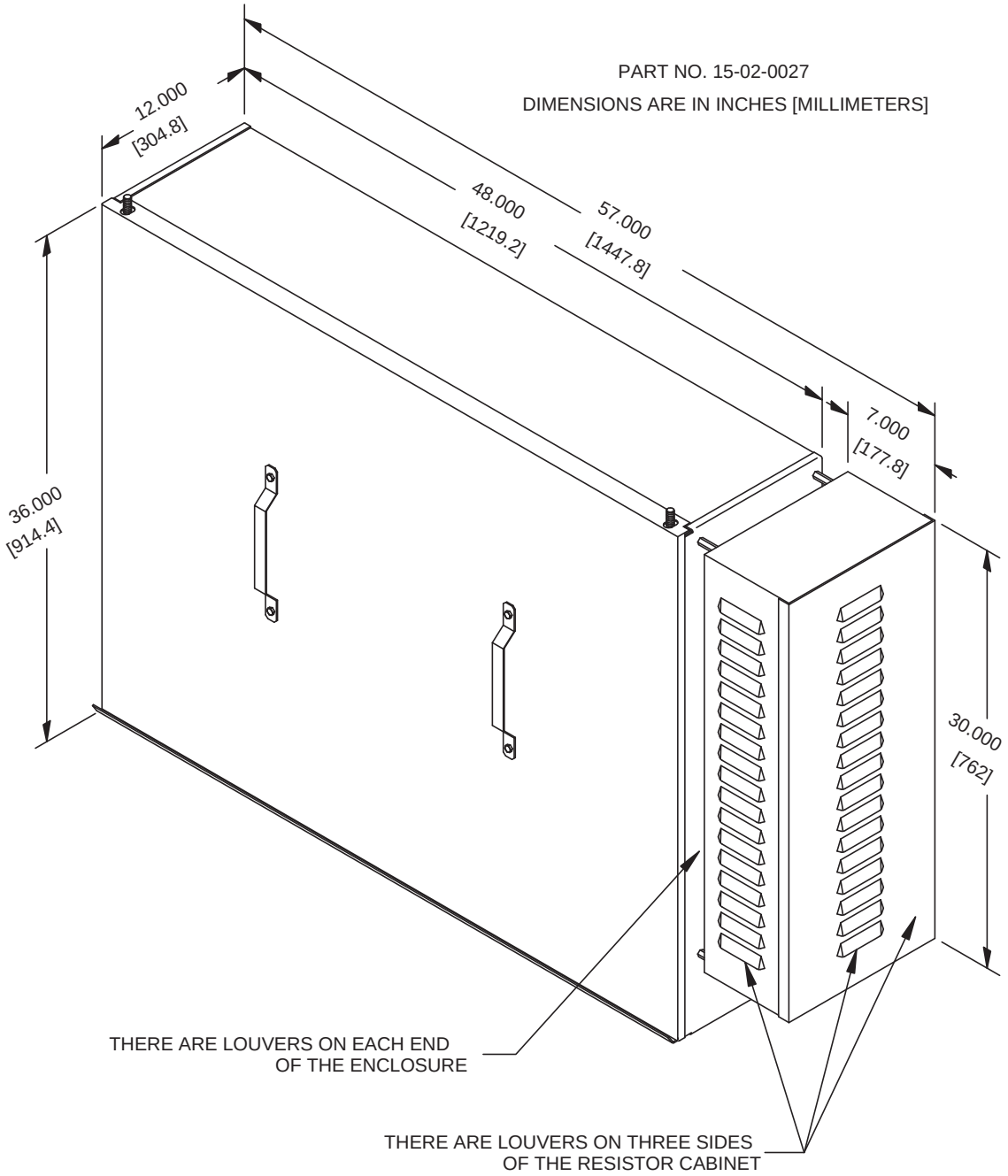

- Part Number: 15-02-0027 (See figure 16.3)
- Dimensions (inch [mm]): 30 [762] H X 57 [1447.8] W X 12 [304.8] D
- Weight full (lbs. [kg]): 300-400 [136 - 181.4] approximate (depends on product)

Traction Enclosure (Single Door)

This enclosure is used for IMC and PTC control products. It is a steel enclosure with an aluminum or steel sub-plate, louvered sides, removable vented resistor box (when required), reversible hinged door with keyed lock, and is floor mounted with front access only.

Figure 16.4 Traction Enclosure, Single Door

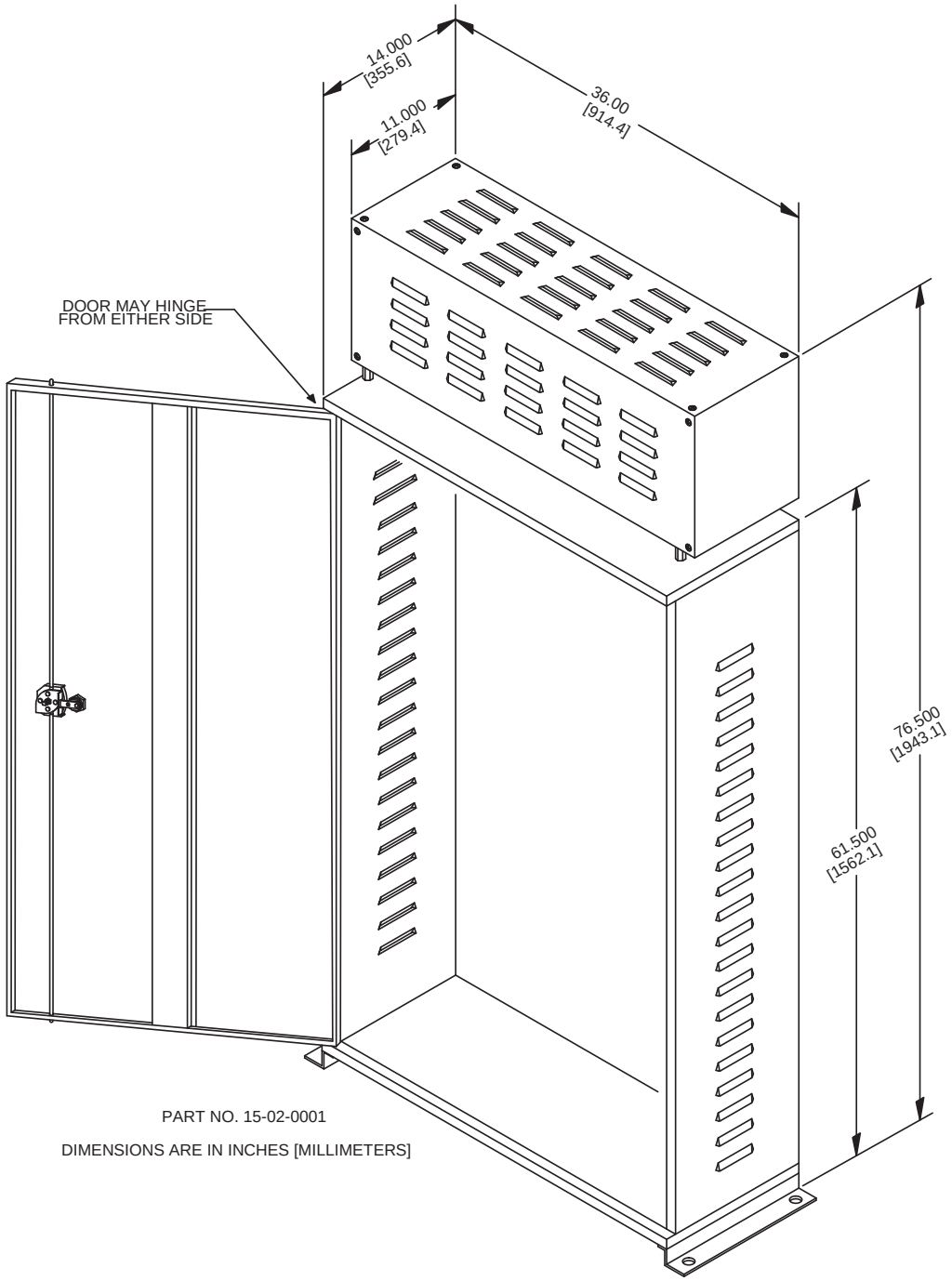

- Part Number: 15-02-0001 (See figure 16.4)
- Dimensions (inch [mm]): 76.5 [1943. 1] H X 36 [914.41] W X 14 [355.6] D
- Weight full (lbs. [kg]): 350 to 550 [158.9 to 249.7] approximate (depends on product)

Traction Enclosures (Double Door)

This enclosure is used for IMC and PTC control products. It is a steel enclosure with an aluminum or steel sub-plate, louvered sides, removable vented resistor box (when required), removable hinged double doors with keyed lock, and is floor mounted with front access only.

Figure 16.5 Traction Enclosure, Double Door

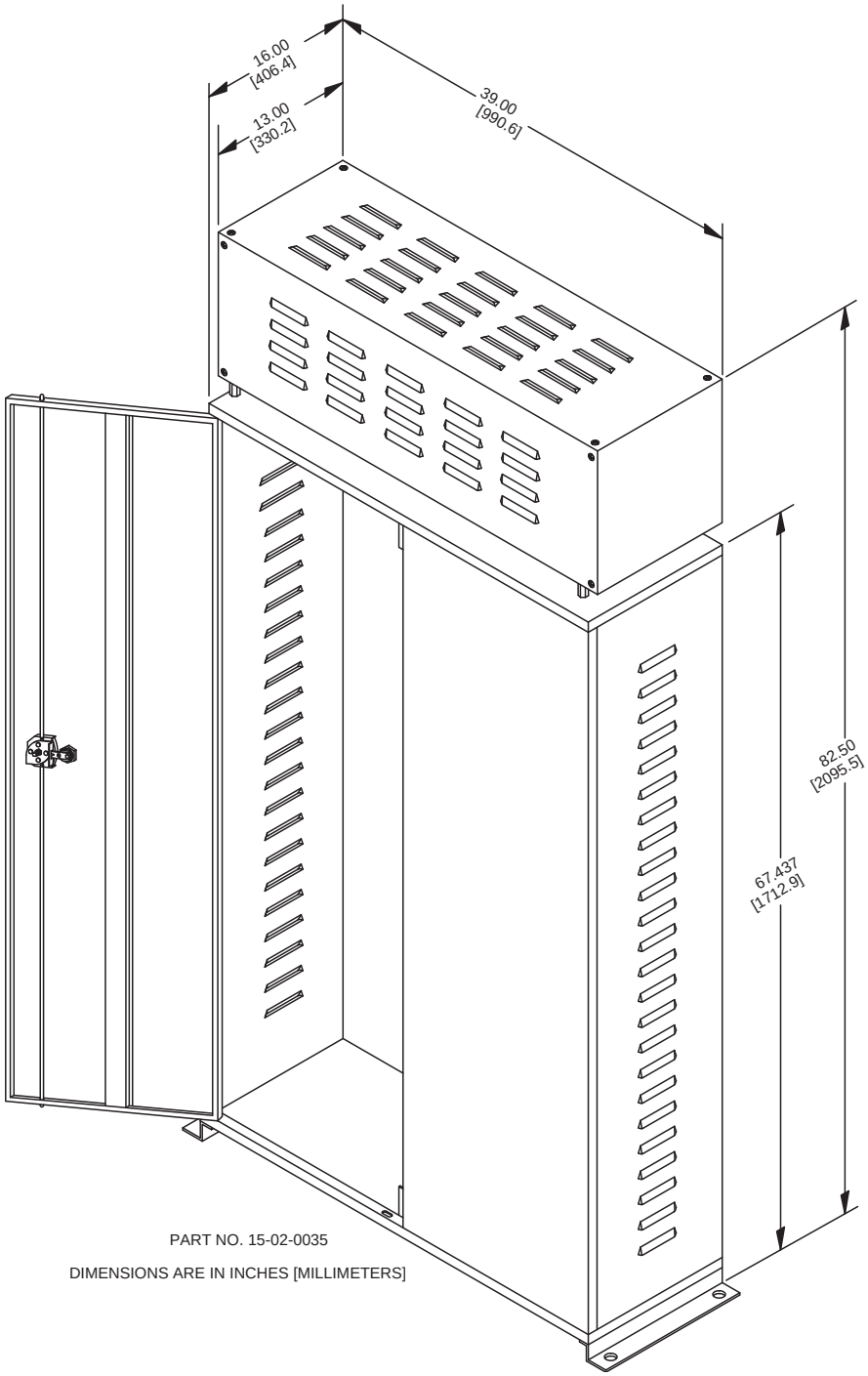

- Part Number: 15-02-0035 (Figure 16.5)
- Dimensions (inch [mm]): 82.5 [2095.5] H X 39 [990.6] W X 16 [406.4] D
- Weight full (lbs.[kg]): 395 to 600 [179.3 to 272.4] approximate (depends on product)

Figure 16.6 Traction Enclosure, Double Door

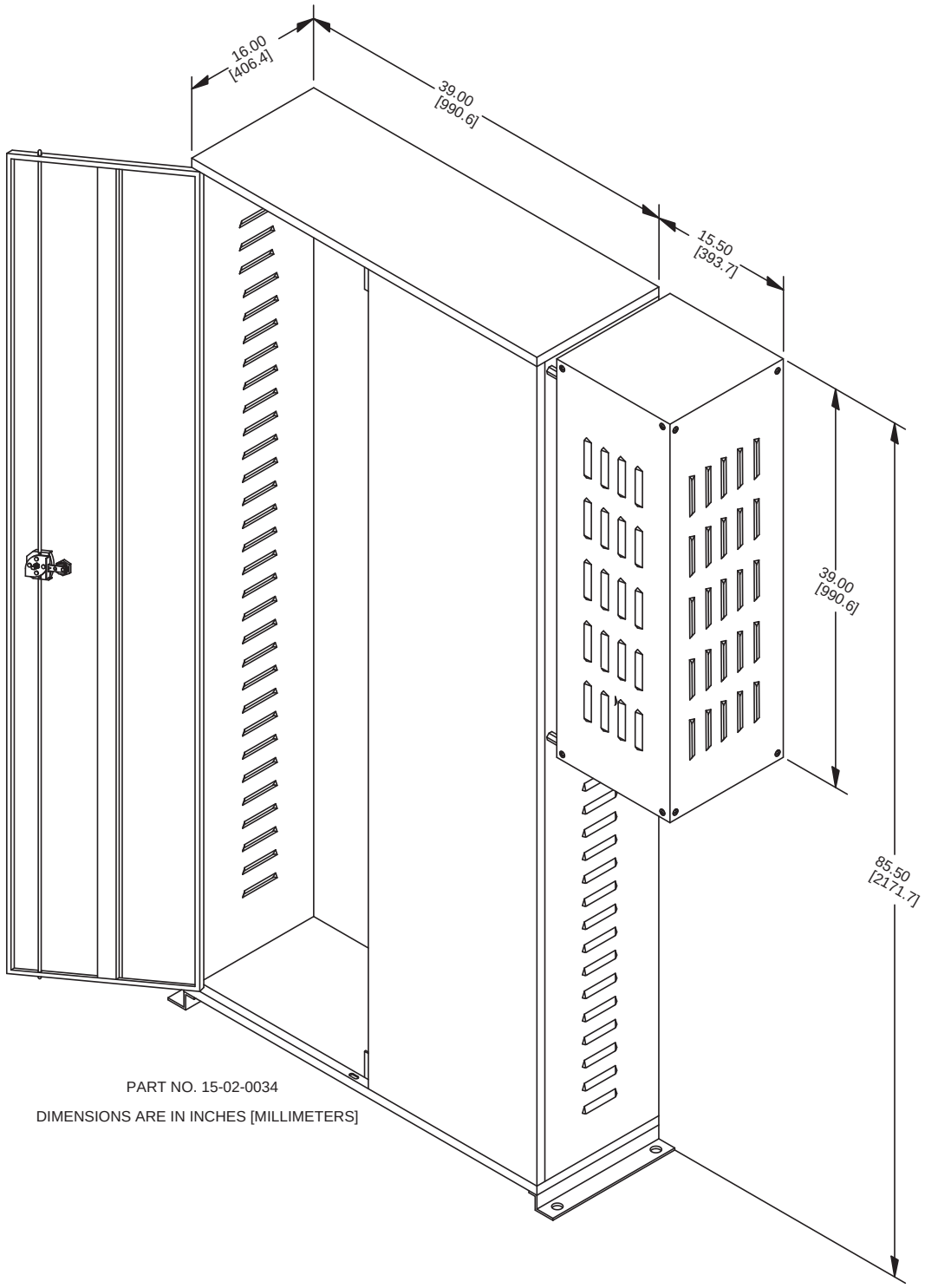

- Part Number: 15-02-0034 (Figure 16.6)
- Dimensions (inch [mm]): 85.5 [2171.7] H X 54.5 [1384.3] W X 16 [406.4] D
- Weight full (lbs.[kg]): 800 - 900 [362.8 - 408.2] approximate (depends on product)

Group Enclosure

This enclosure is used for the M3 Group System. It is a steel enclosure with a steel swing out sub-plate, louvered top, hinged door with keyed lock, slide out keyboard tray and CRT rack, and is floor mounted with front access only.

Figure 16.7 Group Enclosure

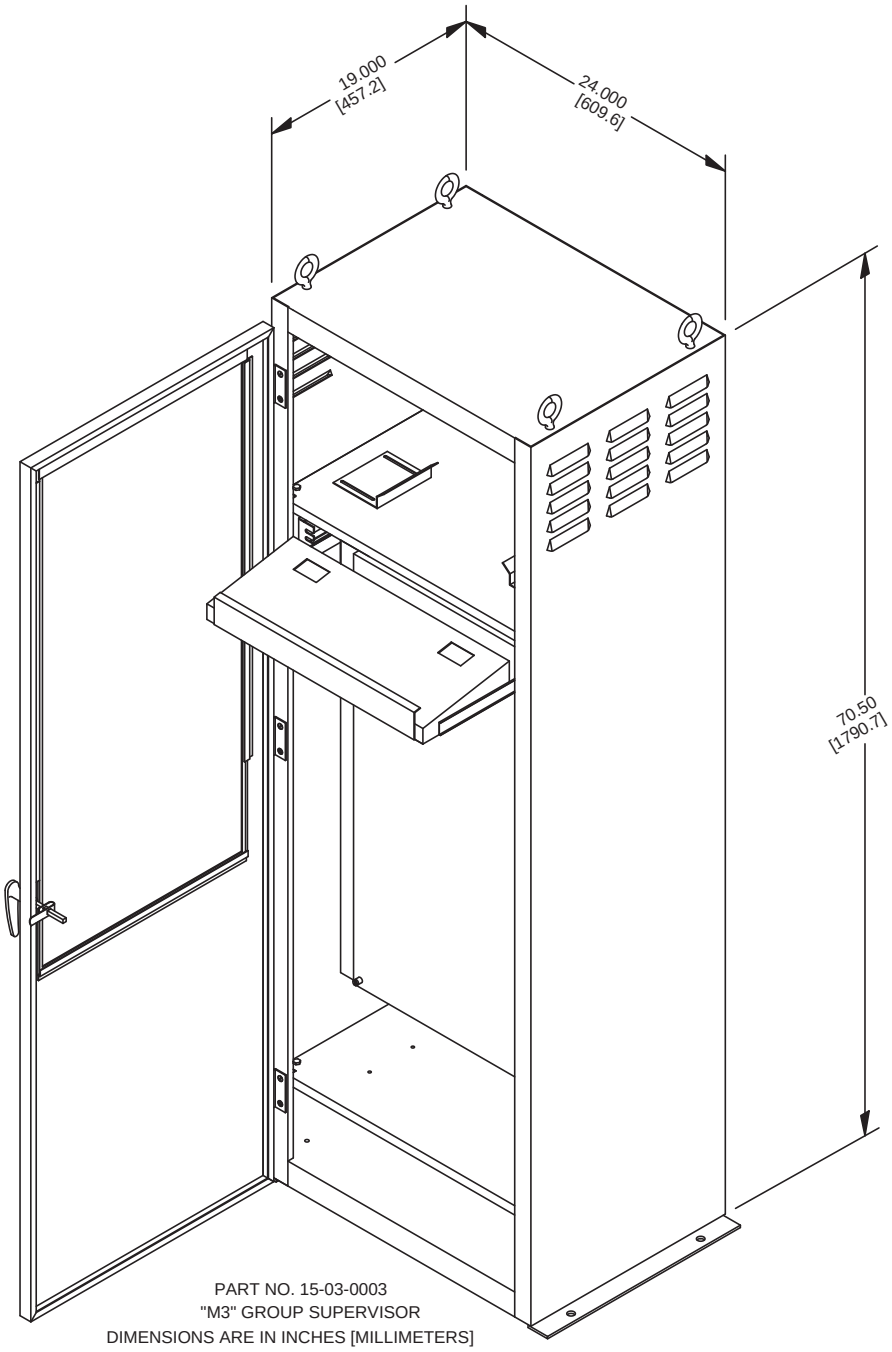

- Part Number: 15-03-0003 (See figure 16.7)
- Dimensions (inch [mm]): 70.5 [1790.7] H X 24 [609.6] W X 19 [482.6] D
- Weight full (lbs. [kg]): 200 to 300 [90.8 to 136.2] approximate (depends on product)

Off-the-Shelf Enclosures

For applications where MCE's standard enclosures are not appropriate, a wide range of off-the-shelf NEMA rated enclosures are available from various manufacturers. For physical dimensions and pricing on these enclosures, consult your MCE Sales Representative. Below is a list of the more commonly used NEMA rated enclosures for elevator applications:

NEMA 1

For special applications or space restrictions in which MCE standard enclosures cannot be used.

Note

In some cases, multiple enclosures may be needed where space restrictions apply.

NEMA 4

Enclosures are intended for indoor or outdoor use primarily to provide a degree of protection against windblown dust, rain, splashing water and hose directed water; undamaged by the formation of ice on the enclosure.

Note

A cooling system may be required for some types of controllers (see dimensions below).

Figure 16.8 NEMA 4 Enclosure

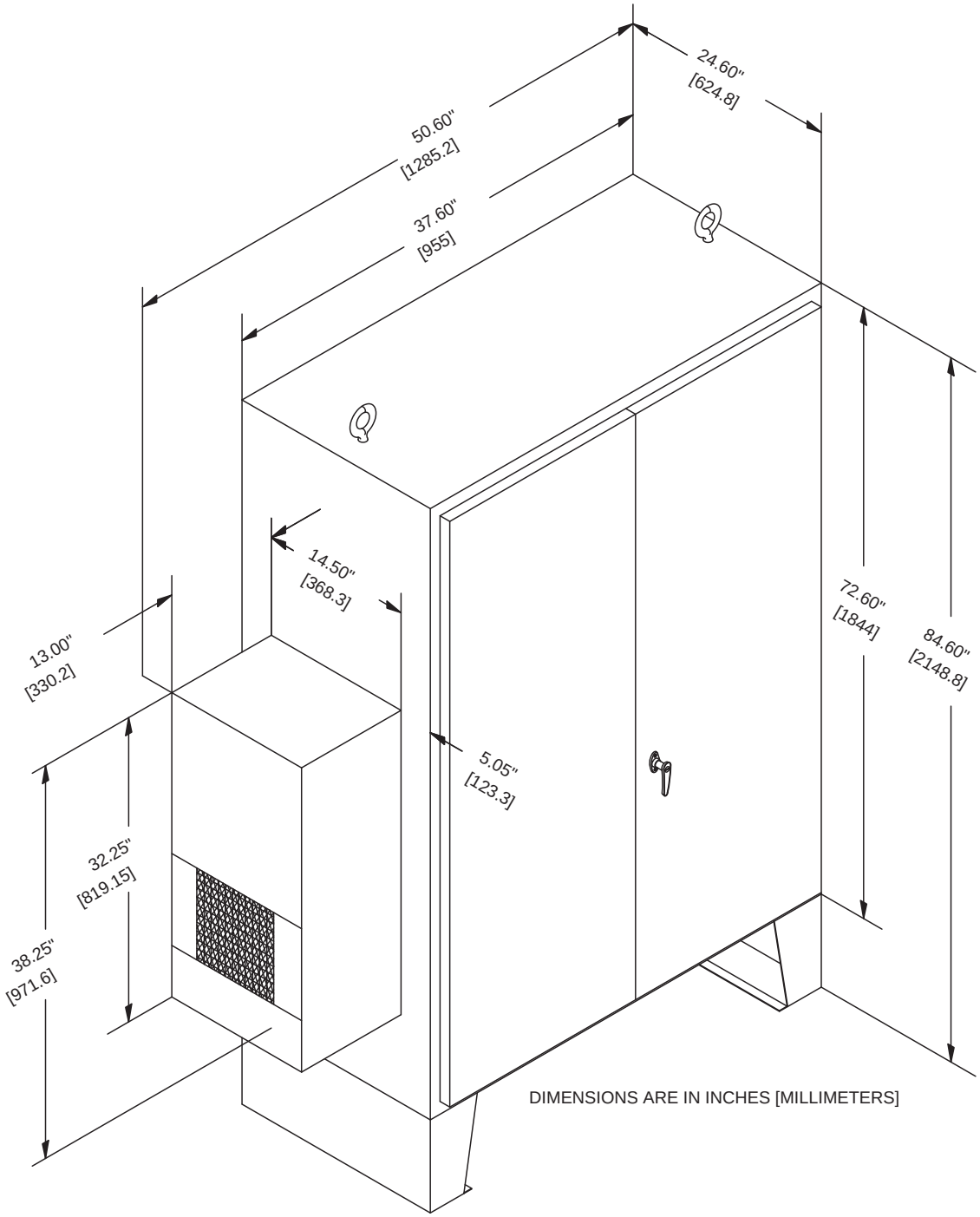

- Part Number: 15-09-0136 (See figure 16.8)
- Enclosure Dimensions (inch [mm]): 84.6 [2148.8] H X 37.6 [955] W X 24.6 [624.8] D
- AC Dimensions (1000 to 4000 BTU) 32.25 [819.15] H X 14.5 [368.3] W X 13 [330.2] D
- AC Dimensions (4000 to 8000 BTU) 37.75 [958.85] H X 18.56 [471.43] W X 18 [457.2] D
- Weight full (lbs. [kg]): 900 - 1000 [408.2 - 453.6] approximate (depends on product)

NEMA 4X

Enclosures are intended for indoor or outdoor use primarily to provide a degree of protection against corrosion, windblown dust, rain, splashing water and hose-directed water; undamaged by the formation of ice on the enclosure. NOTE: A cooling system may be required for some types of controllers (see dimensions below).

Figure 16.9 NEMA 4X Enclosure

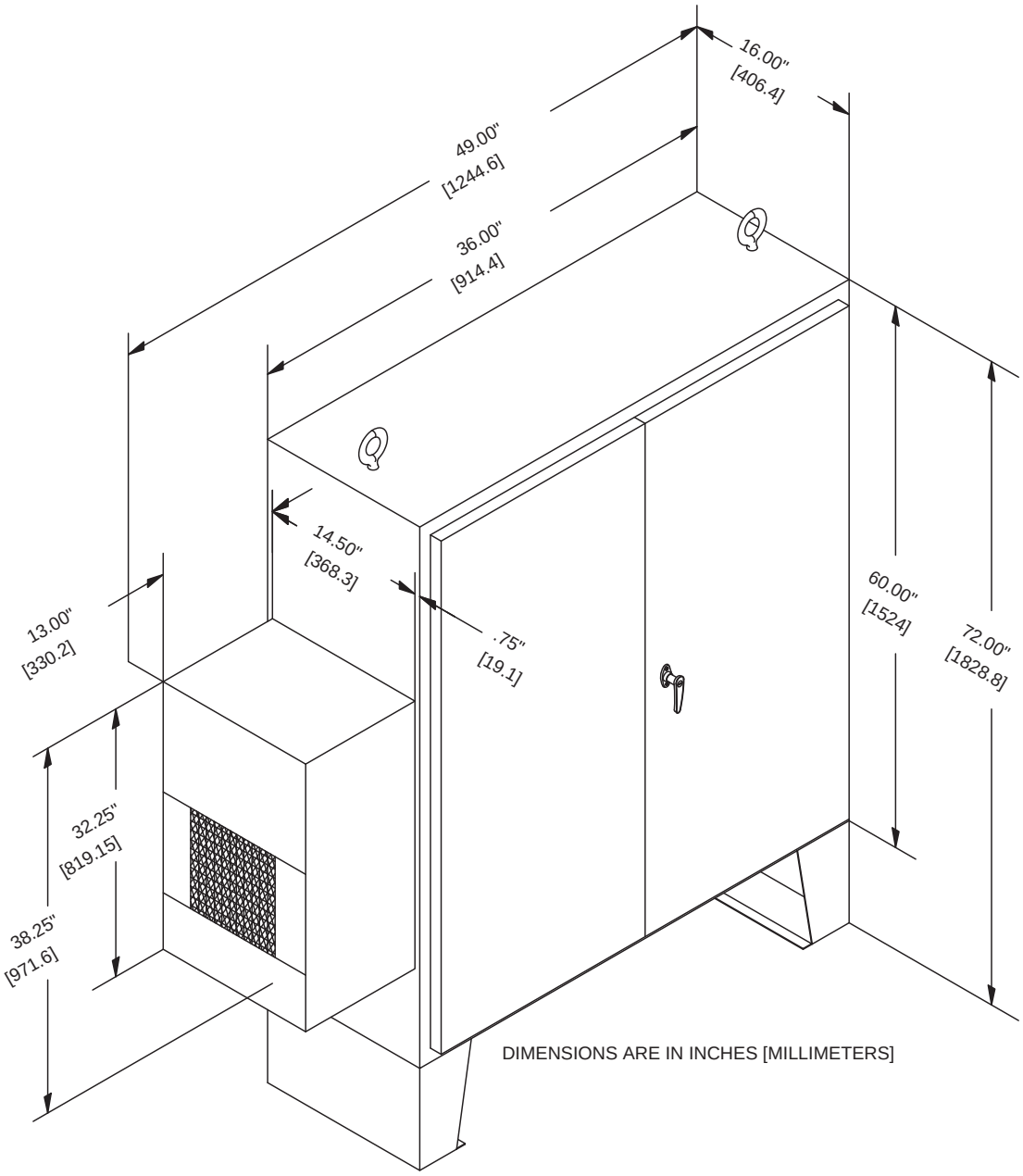

- Part Number: 15-09-0145 (See figure 16.9)
- Enclosure Dimensions (inch [mm]): 72 [1828.8] H X 36 [914.4] W X 16 [4.6.4] D
- AC Dimensions (1000 to 4000 BTU) 32.25 [819.15] H X 14.5 [368.3] W X 13 [330.2] D
- AC Dimensions (5000 BTU) 32.875 [832.03] H X 12.5 [317.5] W X 9.5 [241.3] D
- Weight full (lbs. [kg]): 800 - 900 [362.8 - 408.2] approximate (depends on product)

NEMA 12

Enclosures are intended for indoor use primarily to provide a degree of protection against dust, falling dirt and dripping noncorrosive liquids.

Note

A cooling system may be required for some types of controllers (see dimensions below).

Figure 16.10 NEMA 12 Enclosure

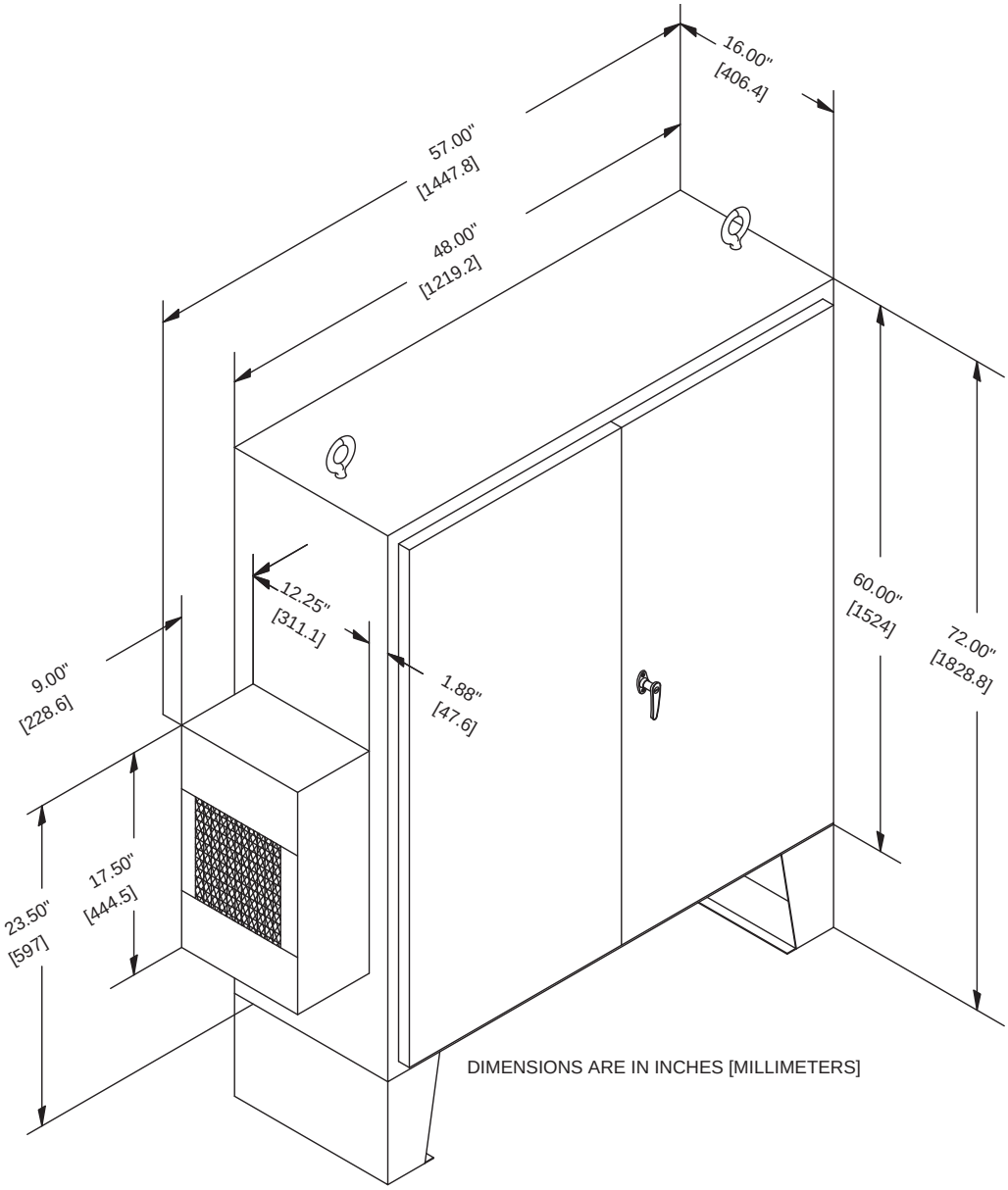

- Part Number: 15-09-0056-W (See figure 16.10)
- Enclosure Dimensions (inch [mm]): 72 [1828.8] H X 48 [1219.2] W X 16 [406.4] D
- AC Dimensions (1000 to 2000 BTU) 17.5 [444.5] H X 12.25 [311.1] W X 9 [228.6] D
- AC Dimensions (2000 to 5000 BTU) 32.875 [832.03] H X 12.5 [317.5] W X 9.5 [241.3] D
- Weight full (lbs. [kg]): 800 - 900 [362.8 - 408.2] approximate (depends on product)

Group Dispatcher (IOS) Overlay Enclosure

(see Hydraulic Enclosure)

Filter Enclosures

Primarily used for 6-pulse and 12-pulse filters, these are steel enclosures with an aluminum or steel sub-plate, louvered sides, and a removable door with front access only.

Figure 16.11 Filter Enclosure

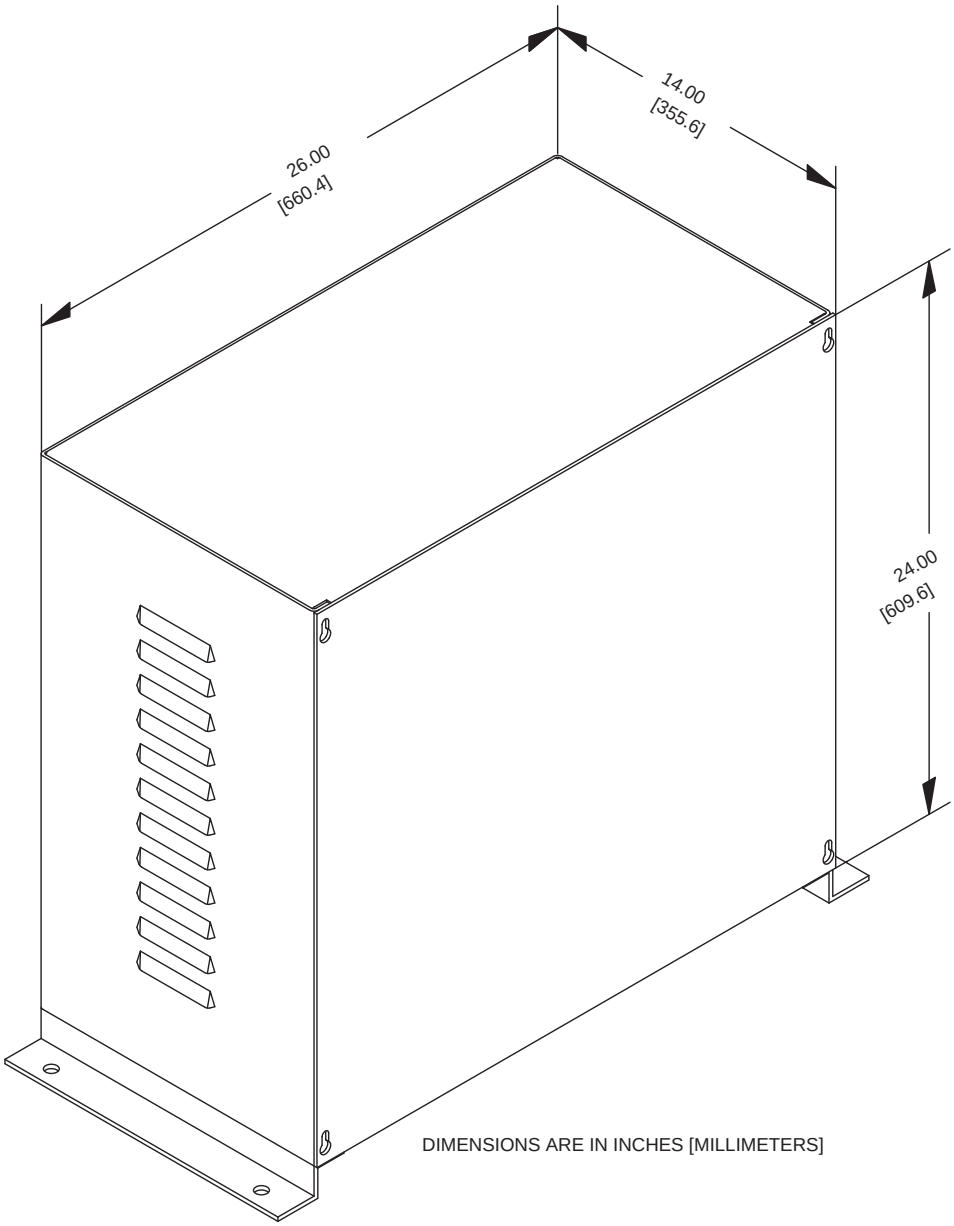

- Part Number: 15-09-0050 (See figure 16.11)
- Enclosure Dimensions (inch [mm]): 24 [609.6] H X 26 [660.4] W X 14 [355.6] D
- Weight full (lbs. [kg]): 100 - 200 [45.3 - 90.7] approximate (depends on product)

Figure 16.12 Filter Enclosure

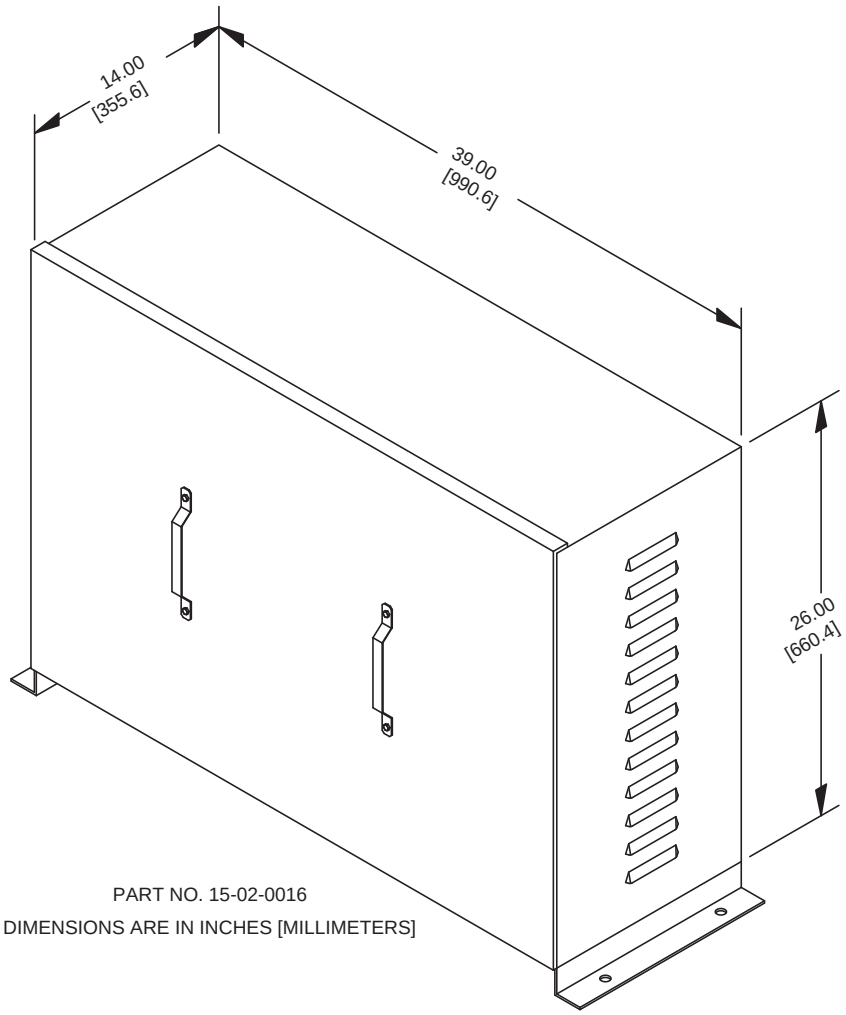

- Part Number: 15-02-0016 (See figure 16.12)
- Enclosure Dimensions (inch [mm]): 26 [660.4] H X 39 [990.4] W X 14 [355.6] D
- Weight full (lbs. [kg]): 200 - 300 [90.7 - 136] approximate (depends on product)

Landing System Physical Specifications

LS-STAN Specifications

Refer to Figure 16-13 for LS-STAN.

Sensor

A vane operated infrared proximity switch manufactured by MCE.

- Part Number: VS-1
- Dimensions (inch [mm]): 1.92 [48.77] H X 1.93 [49.02] W X 1.95 [49.53] D
- Opening Dim. (inch [mm]): 0.75 [19.05] W X 1. 12 [28.45] D

Power Supply

- Part Number: PS-5A or PS-7A
- Dimensions (inch [mm]): 1. 03 2 [26.2 1] H X 4.5 [114, W X 3 [76.2] D

Enclosure

The LS-STAN has a steel enclosure with a rear access screw cover for sensor adjustment; it has five separately adjustable sensor lanes and slots for adjustability in mounting on the car top.

- Part Number: 15-07-0001
- Dimensions (inch [mm]): 16.5 [393.7] H X 10 [254] W X 3.5 [88.9] D
- Weight (lbs. [kg]): 11 [5. 0] approximately (assembled)

Vane Assembly

The P4-VANE- 12# is used for 12 lb. rails or smaller, the P4-VANE-15# is used for 15 lb. or 18 lb. rails and P4-VANE-30# is used for 22 or 30 lb. rails; they include the mounting hardware and Unistrut. The vanes are mounted on a P6000 or P7000 Unistrut, are 24" in length, and include rail clips and mounting hardware.

- Part Number: P4-VANE-12#, P4-VANE-15# or P4-VANE-30#
- Vane Dim. (inch [mm]): 5.875 [149.23] H X 2 [50.8] W X 3.80 [96.52] D

Figure 16.13 LS-STAN

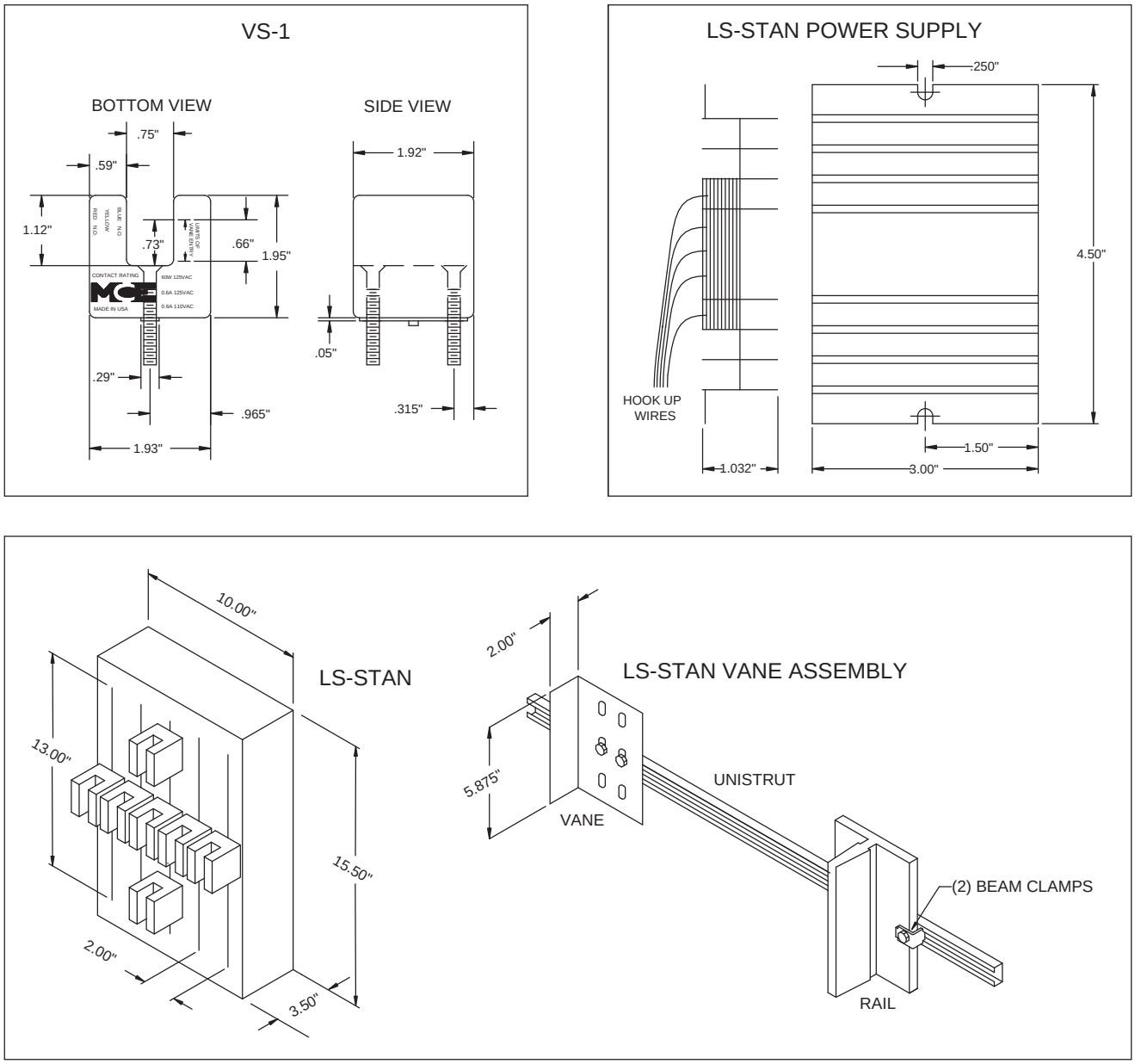

LS-QUAD-2 Specifications

Magnetic Sensor

A magnetically operated switch manufactured by MCE.

- Part Number: LS-PS1
- Dimensions (inch [mm]): 0.75 [19.05] bushing and 42 [1066.8] wire

Enclosure

The LS-QUAD-2 has a steel enclosure with a rear access screw cover for sensor adjustment and has an aluminum front plate for sensor mounting.

- Part Number: 15-07-0007
- Dimension (inch [mm]): 20.8 [528.3] H X 6.5 [165. 1] W X 4.5 [114.3] D
- Weight (lbs. [kg]): 14 [6.36] approximately (assembled)

Figure 16.14 LS-QUAD-2 Enclosure (Rear View)

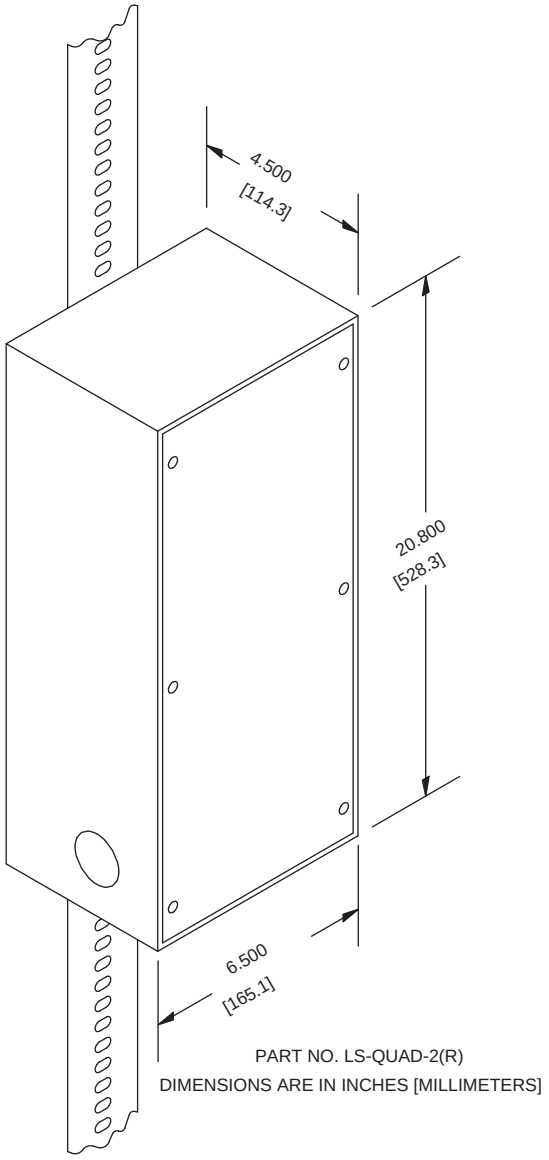

Encoder

The encoders are mounted on the face plate of the LS-QUAD-2. The passage of the steel tape in front of the encoder optics interrupts beams of light to provide position and speed information for the pattern generator.

Tape

The tape is perforated with slotted holes.

- Part Number: 40-10-0003
- Dimensions (inch [mm]): 3.11 [78.99] W X. 12 [3.05] thick
- Hole Dim. (inch [mm]): 0.375 [9.53] H X.625 [16.88] W with 0.75 [19.05] center to center
- Weight (lbs./ft. [kg/m]): 0.1875 [.280]

Tape Mounting

Top and bottom bracket assemblies and mounting hardware are included

- Part Number: TAPE-MT-QUAD

Figure 16.15 LS-QUAD-2 Bottom Tape Mounting

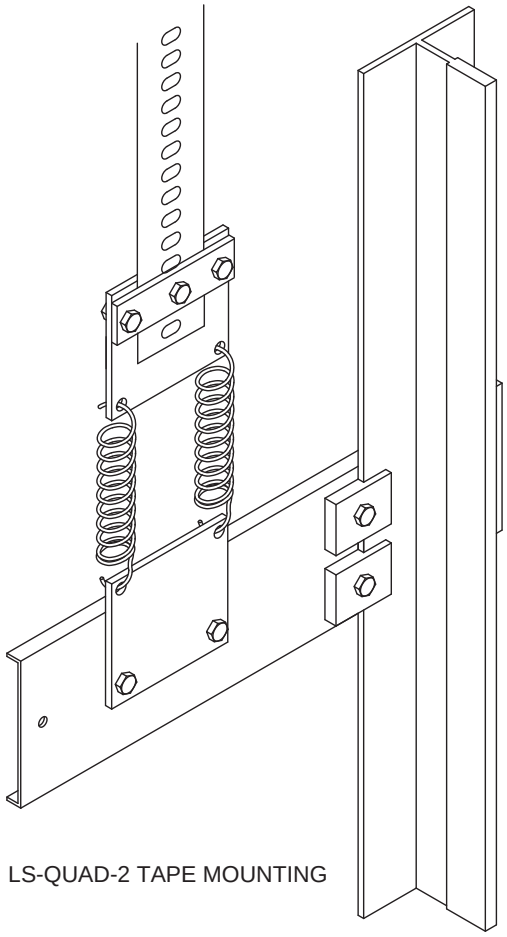

LS-QUTE Specifications

Magnetic Sensor

A magnetically operated switch manufactured by MCE.

- Part Number: LS-PS1
- Dimensions (inch [mm]): 0.75 [19.05] bushing and 42 [1066.8] wire

Enclosure

The LS-QUTE has a steel enclosure with a rear access screw cover for sensor adjustment and has an aluminum plate for sensor mounting.

- Part Number: 15-07-0005
- Dimensions (inch [mm]): 12 [304.8] H X 5 [127] W X 3 [76.2] D
- Weight (lbs. [kg]): 2.0 [.908] approximately (assembled)

Tape

- Part Number: 40-10-0002-B
- Dimensions (inch [mm]): 3.11 [78.99] W X. 12 [3.05] thick
- Weight (lbs/ft. [kg/m]): 0.1875 [.280]

Tape Mounting

Top and bottom bracket assemblies and mounting hardware are included

- Part Number: TAPE-MT-QUTE

Figure 16.16 LS-QUTE Components

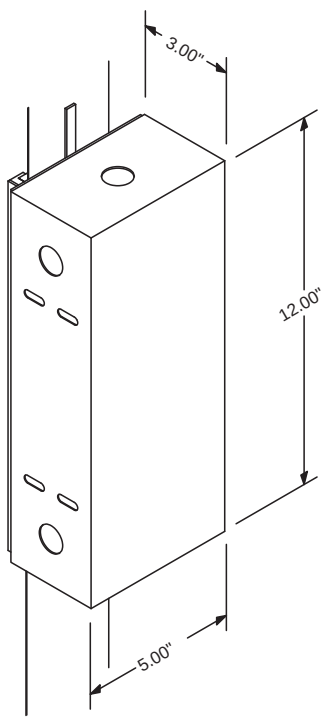

ENCLOSURE AND TAPE

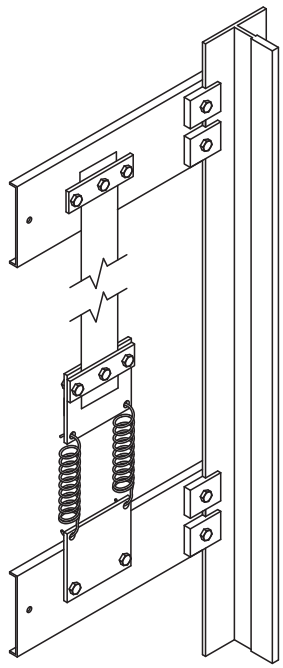

TAPE MOUNTING
PART NO. TAPE-MT-QUTE

16

LS-QUIK Specifications

Sensor

A vane operated infrared proximity switch manufactured by MCE.

- Part Number: VS-1 (See figure 16.13)

Enclosure

The LS-QUIK has a steel enclosure with a rear access screw cover for sensor adjustment and has a steel front plate for sensor mounting.

- Part Number: 15-07-0006
- Dimensions (inch [mm]): 20.875 [530.225] H X 6.5 [165. 1] W X 6.625 [168.275] D
- Weight (lbs. [kg]): 14 [6.36] approximately (assembled)

Figure 16.17 LS-QUIK Enclosure

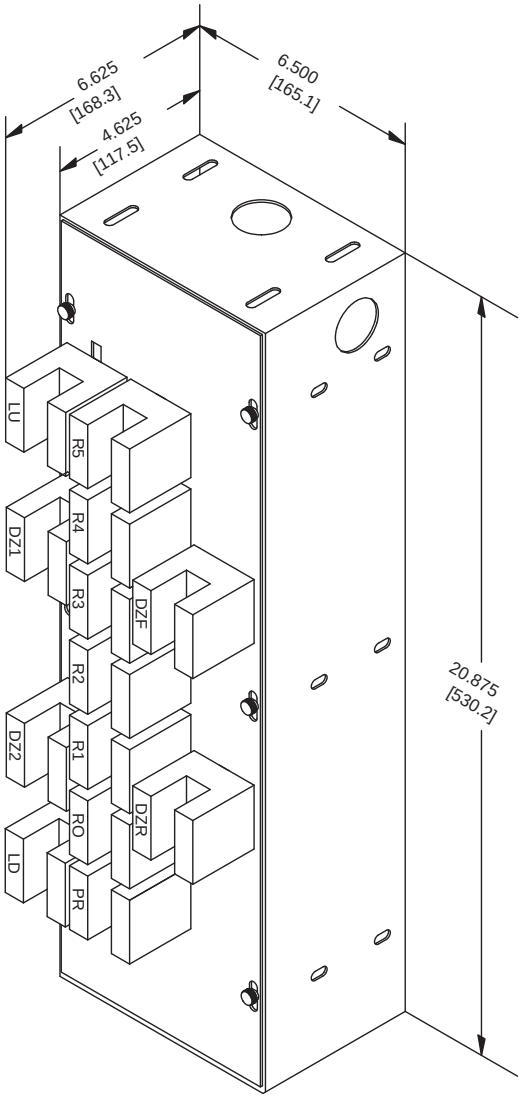

Encoder

The encoder and follower wheel are mounted on the encoder base plate. The encoder base plate is mounted above the car roller guide assembly. A spring applies pressure to the follower wheel to ensure proper contact with the guide rail.

- Part Number: LSQK-ENCDR
- Part Number: 11-02-0003 Encoder Base Plate

Figure 16.18 LS-QUIK Wheel Driven Encoder Assembly

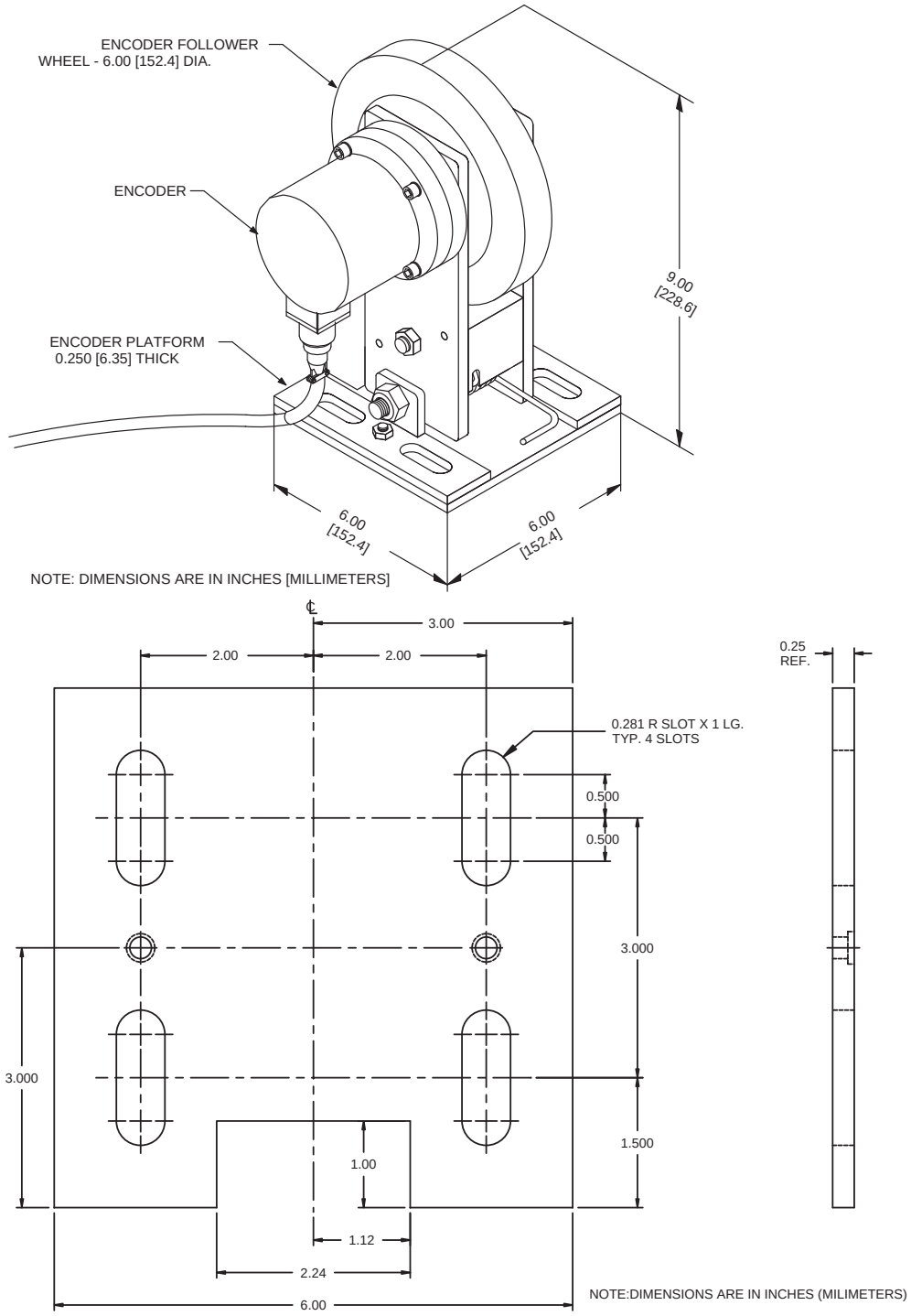

16

LS-QUIK Vane

This vane is used for absolute floor encoding, as well as door zone and leveling. The vane has break-out tabs that are removed to encode the various floors.

- Part Number: 40-05-0010

Figure 16.19 LS-QUIK Vane

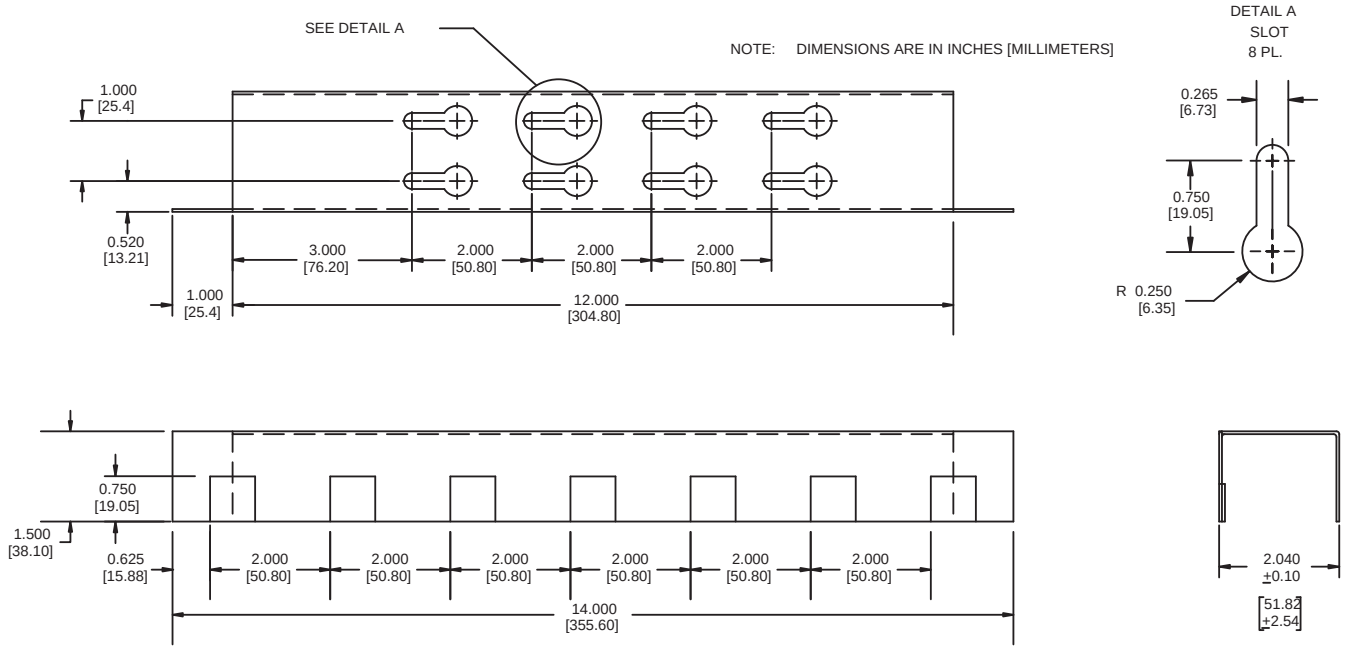

Isolated Platform Load Weigher

The isolated platform load weigher consists of the following:

- Part Number: LW-SA-1 Sensor Assembly
- Part Number: 40-02-0094 Target Brackets (2 each)
- Part Number HC-LWIPA Enclosure Assembly

Figure 16.20 Isolated Platform Load Weigher

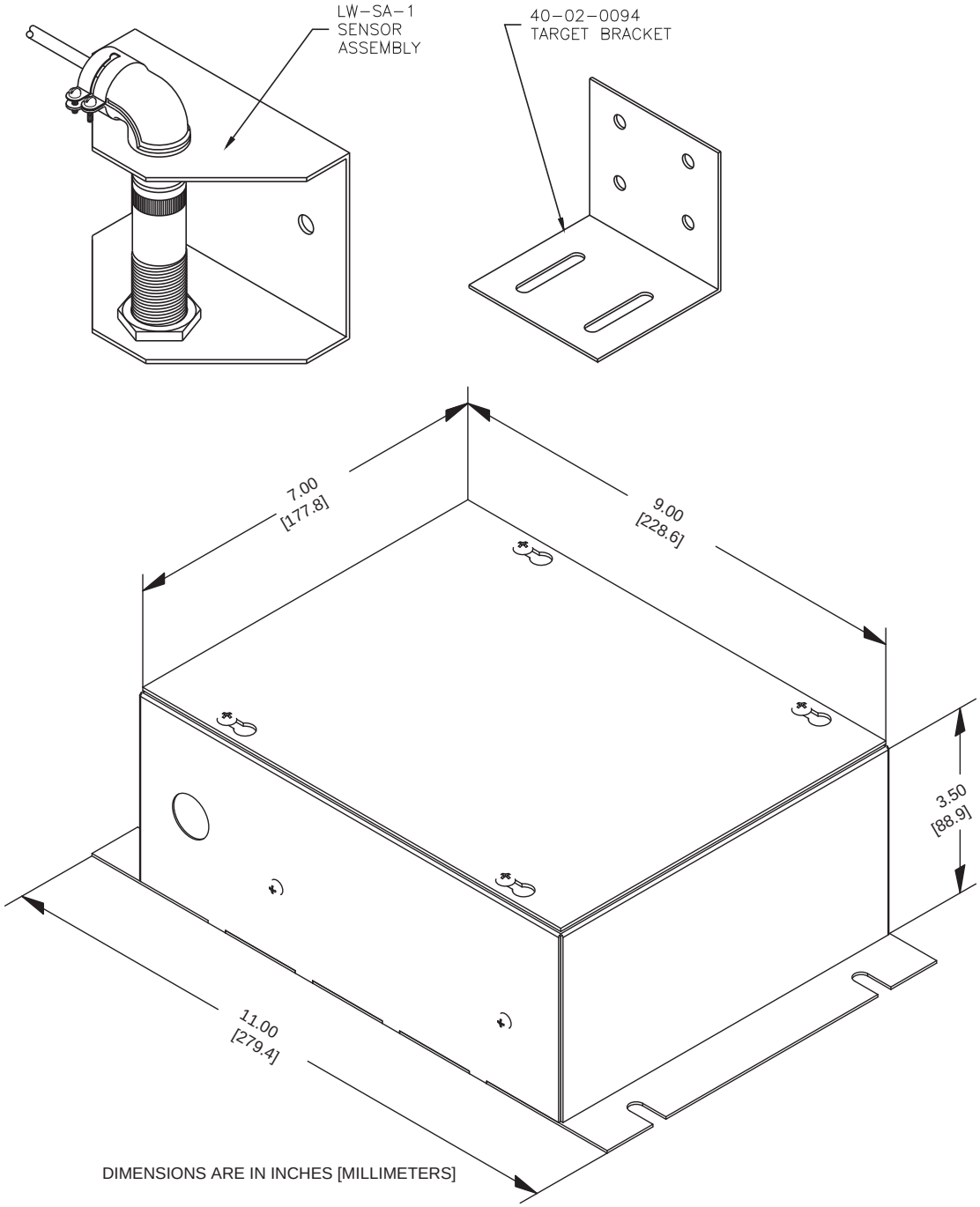

Figure 16.21 Speaker Enclosure (White)

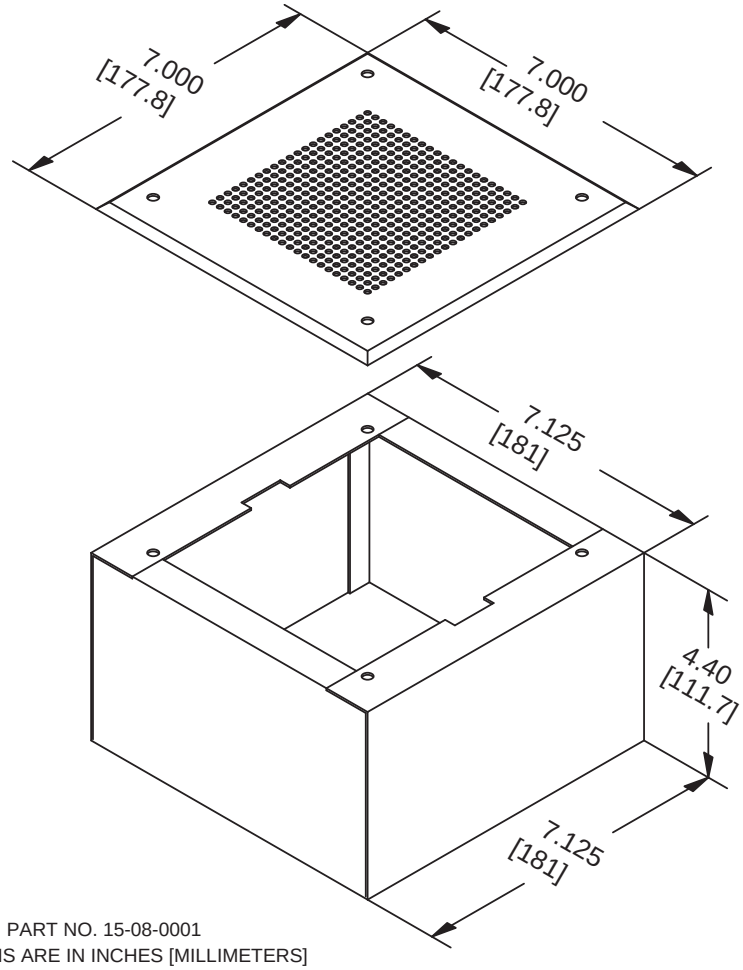

PART NO. 15-08-0001
DIMENSIONS ARE IN INCHES [MILLIMETERS]

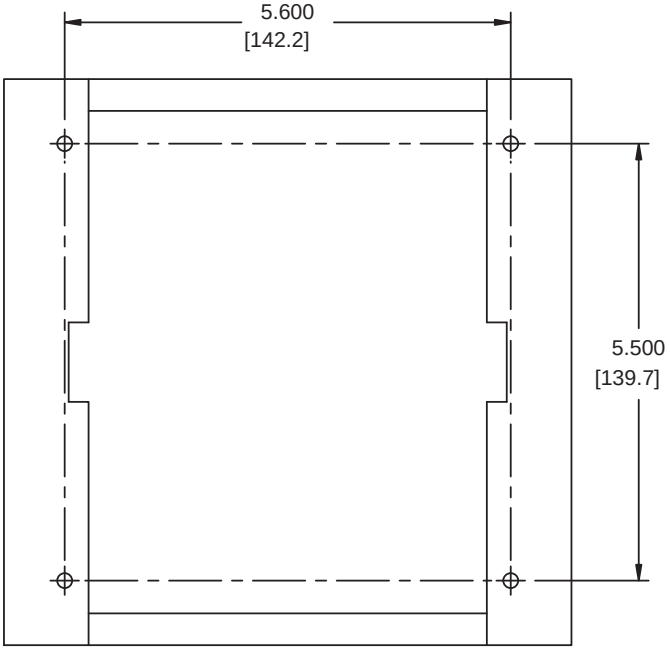

Figure 16.22 Speaker Enclosure, Black

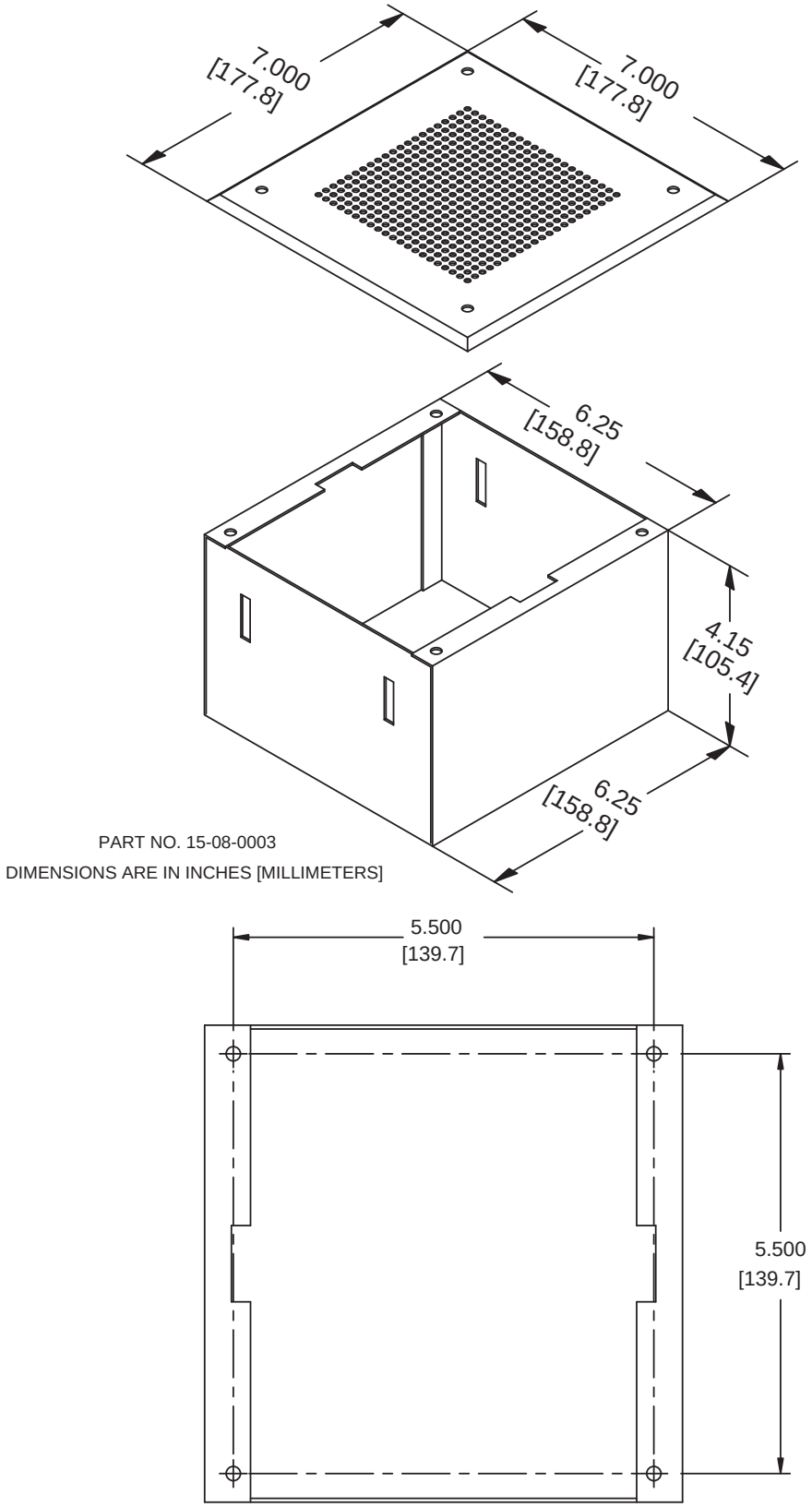

Figure 16.23 Speaker Enclosure

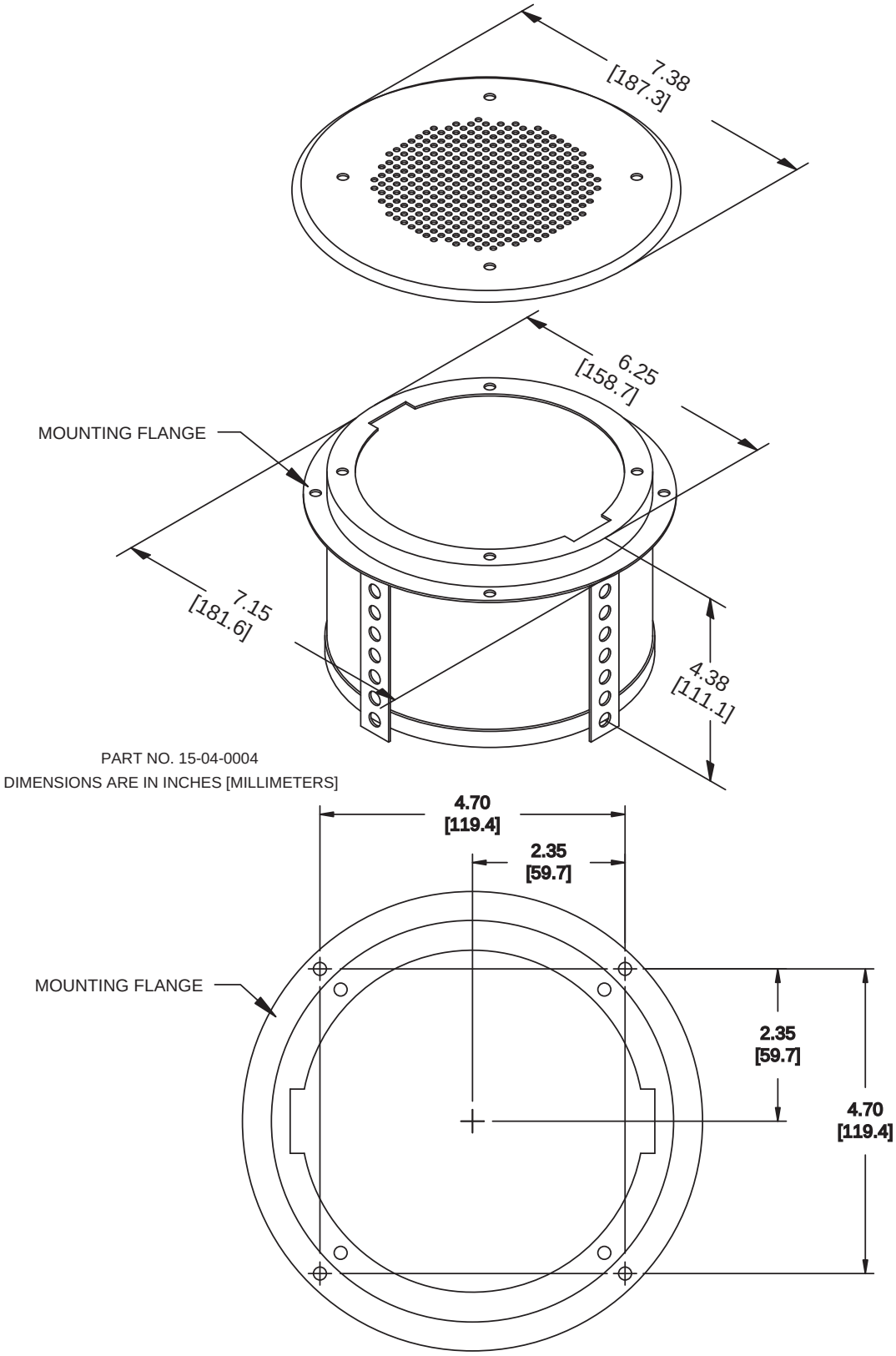

TLS Terminal Limit Switches

TLS-C-12 and TLS-C-16 are cartop mounted, magnetically operated switch arrays. TLS-1 is an individually sealed, magnetically operated switch mounted on its own bracket.

- Part Number: TLS-C-12
- Dimensions (inch [mm]): 16.344 [415.1] L X 5.875 [149.2] W X 4 [101.6] D

Figure 16.24 TLS-C-12 Terminal Limit Switches

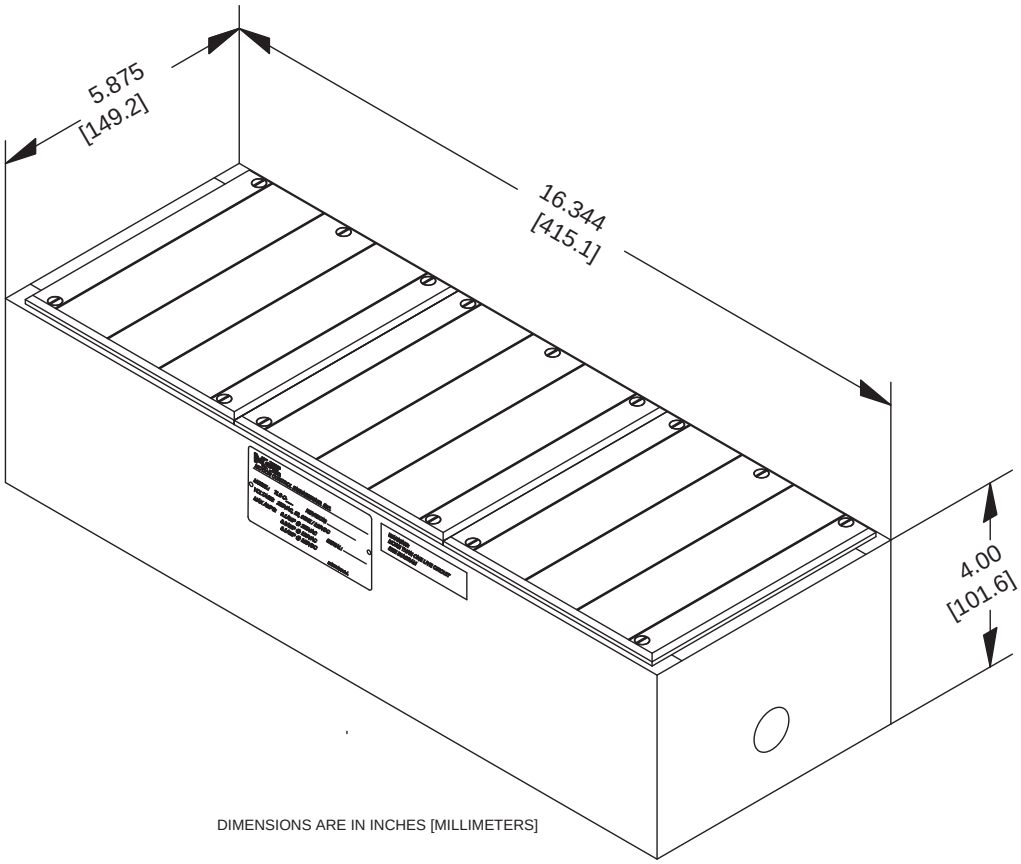

- Part Number: TLS-C-16
- Dimensions (inch [mm]): 21.625 [21.625] L X 5.875 [149.2] W X 4 [101.6] D

Figure 16.25 TLS-C-16 Terminal Limit Switches

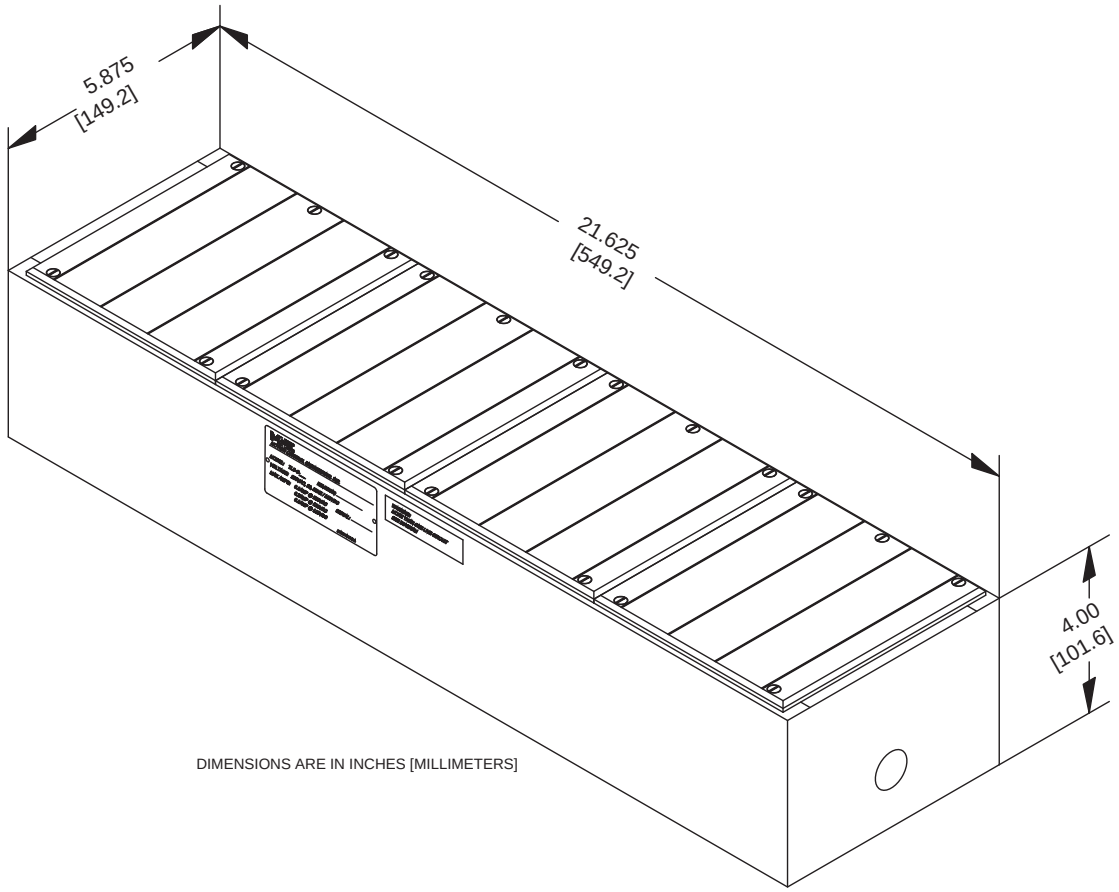

- Part Number: TLS-1

Figure 16.26 TLS-1 Terminal Limit Switches

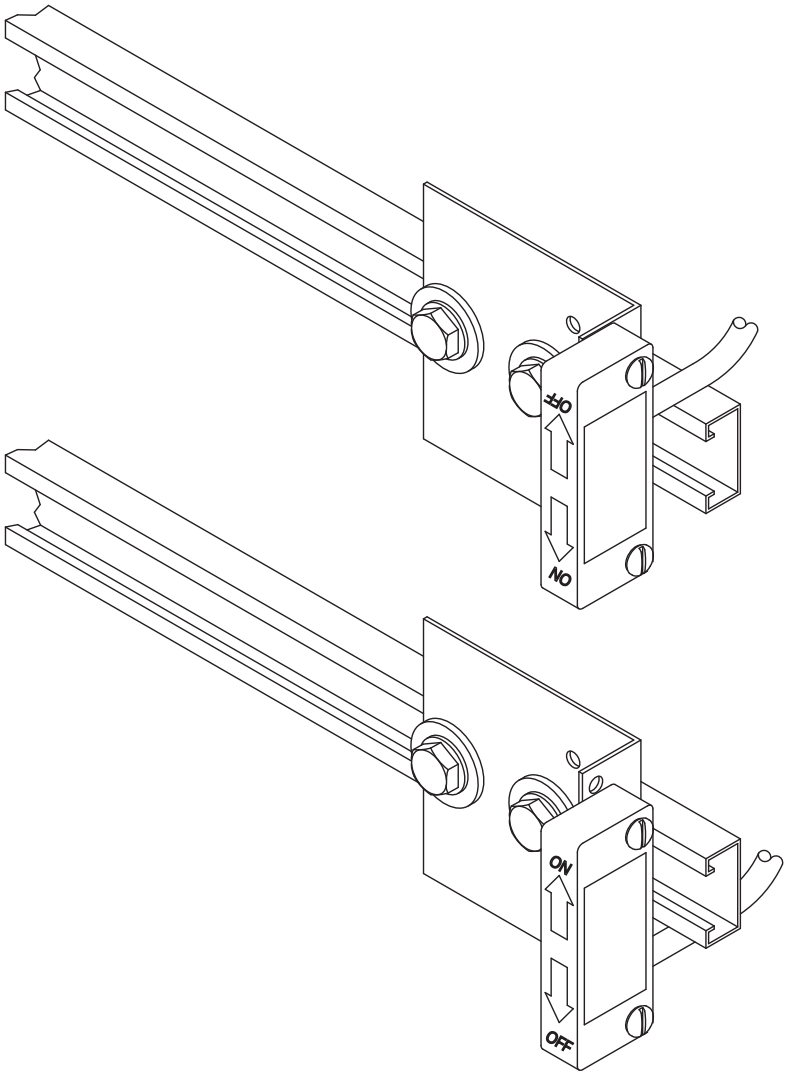

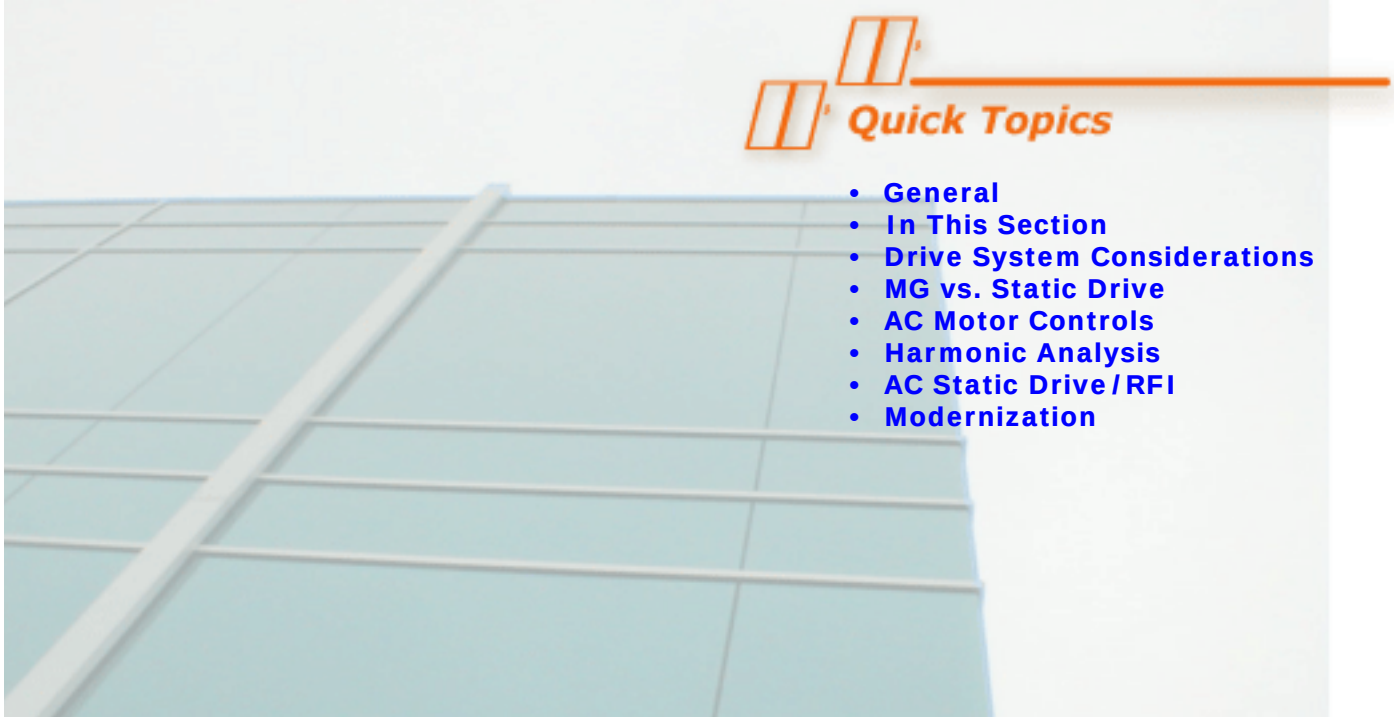

Technical Publications

In This Section

Over time, several "universal" issues affecting elevator installation and/or modernization have repeatedly been of concern. This section contains technical "white" papers addressing several of these issues, including:

- Drive System Considerations
- Motor Generator vs. Static Drives: A look at when it might be appropriate to stay with motor generator drives rather than switching to static drives.
- AC Motor Controls for Elevators: A review of pertinent issues regarding proper application and installation of AC motors and drives.
- Harmonic Analysis and Comparison: A discussion of harmonic analysis and comparison of DC and AC static drives.
- AC Inverter Drives & RFI: A review of the generation of electrical noise and effects of RFI in AC static drives.
- Modernization Performance Charts

Drive System Considerations

This introductory information is a preface to the separate white papers in this section, providing information about why they were written, including:

- Purpose
- Overview
- Communication is Vital
- Drive Technology

Purpose

This Technical Publication discusses drive system considerations for selection of elevator drives and possible side effects associated with static drives.

Motion Control Engineering manufactures elevator control systems using motor generator and DC-SCR or AC static drives. MCE's experience as a control system supplier suggests the need to improve industry understanding regarding the application of elevator control drive systems.

Overview

Many modernization projects use static drives successfully (either DC-SCR or AC inverter type). On the other hand, a few projects have presented significant difficulties from which much can be learned.

As an elevator control system supplier, MCE has become aware of problems that result from the use of static drives. These situations underscore the need to share experiences and maintain an open dialogue between elevator control suppliers, consultants, contractors and other interested parties.

Communication is Vital

Sometimes, neither consultants, contractors nor control suppliers alone recognize a potential problem. Communication is vital to the successful installation of static drives and it is, of course, preferable to address as many issues as possible up front. Mutual recognition of potential issues is the key to a successful project. This is particularly true for modernization.

Occasionally, a problem comes as a total surprise. The result is chaos -- especially for the end user, who cannot understand how knowledgeable elevator industry people could have failed to foresee the difficulty. Some specification writers have attempted to address issues in advance by specifying that, "The contractor and/or control supplier shall be responsible for everything that may occur as the result of the application of static drives." This is not a reasonable solution.

To best serve the customer and the industry, it is necessary to establish a continuous dialogue. There are issues that can be recognized up front and potential difficulties prevented. Consultants, contractors and control suppliers working as a team can research, evaluate and resolve issues.

An example of an issue not properly identified and adequately addressed is the case where elevators were converted to DC-SCR static drives. During the completion stages of the project it was discovered that the existing building power supply was inadequate. What can an owner or, for that matter, a supplier do when they have no prior knowledge of this type of job specific condition?

The contractor, consultants and others directly familiar with a project should recognize the need for power system evaluation. Everyone involved with a modernization project should remember that existing elevators frequently do not run at contract speed. Further, static drives may affect AC power distribution systems differently than original DC or AC elevator controls.

Drive Technology

Modern drive technology includes motor generator drives using static field control, DC-SCR static drives and AC static drives. These state-of-the-art drives raise additional issues for consideration.

Old relay technology had little or no effect on the AC line. This equipment generated little or no noise, and operated well with emergency power generators.

Static drives present issues for new construction and retrofitting (modernization) of existing systems. Static drives are preferred, in most cases, over motor generator drives. For new construction, the static drive option can be evaluated and used as the basis for design of the elevator machine room and the AC power distribution system. For modernization projects, it is important to recognize the potential for damaging effects from static drives, including:

- Degraded performance of emergency power generators
- Additional heating and induction motor power losses
- Audible noise
- Interference with sensitive medical equipment
- Interference with computers
- Interference with radio and television equipment

Noise is generated as a result of static drive switching and the way these devices draw current from the AC line. Static drives use switching devices, including SCRs, transistors, and IGBTs, that switch very rapidly, producing Radio Frequency Interference (RFI). Static drives also produce current distortion (harmonic distortion) on the AC line.

Types of noise include:

- Audible Noise - Airborne
- Physical Noise - Structure conducted
- Electrical Noise - Radiated or conducted
  - Radiated Noise from wires connected to a drive becomes an issue when the magnitude creates RFI that interferes with radio receivers and other devices.
  - Conducted Noise transmitted from the drive through electrical conductors can result in harmonic distortion, line notching, and other disturbances.

While static drives have some unfriendly characteristics, their overall performance makes them highly desirable. When the implications are understood, static drives frequently provide the best total solution for elevator control.

Conclusion

The MCE Technical Publication series is intended to be an informative catalyst for ongoing dialogue and sharing of information between consultants, elevator contractors, owners and other interested parties. MCE Technical Publications are available on our website at www.mceinc.com.

Don Alley, Chief Engineer
MCE R&D Staff
January 1996

Note

It is MCE's philosophy to share information with interested parties. To this end MCE grants unlimited reproduction rights, with proper attribution, to NAVTP and/or NAEC to further engineering and technical excellence within the elevator industry.

Static Drives vs. Motor Generators

Purpose

This Technical Publication examines variables that help determine the suitability of static drives vs. motor generators for any given project.

Motion Control Engineering, Inc. experience with various drive configurations suggests the need for review of drive considerations by consultants and contractors prior to the selection of a drive system for any project, whether new installation or modernization.

Overview

Many elevator control specifications require the use of static drives. Nonetheless, experience shows that there are applications where motor generator control systems may be a better choice (in fact they may be the only choice). It is important to have a basic understanding of the variables that influence drive selection.

Introduction

Selecting an elevator drive requires examination of the adequacy of the power distribution system and possible interference with other devices sharing the power line. After all variables have been considered, select the drive type (and if necessary, appropriate isolation and filtering devices) to satisfy the needs of the specific application.

For elevator systems, static drives are preferred over motor generator sets. Nonetheless, after thorough evaluation, motor generator drives may be the most appropriate choice for a particular project. In this bulletin, we evaluate the merits of both choices and look at some situations in which it might be better to specify motor generator drives in lieu of static drives. Issues to consider before selecting static drives include:

- Power consumption
- Maintenance
- Emergency power generators
- Shared power feeders
- Equipment sensitive to harmonics
- Marginal AC feeders
- Gearless motors with straight slots

Power Consumption

One of the advantages of solid state drives is that they are more efficient than motor generator sets. There are three elements that contribute to an elevator systems use of power.

1. **The power used by the MG set when running idle.** Many are not aware of the fact that a motor generator draws about 35% to 40% of full load current when idling. In other words, if the generator is running while the car is stopped, as much as 40% of full load current may be drawn to keep the generator running. This current is used for overcoming friction and providing magnetization current for the MG set. Power used to run a generator at idle may translate to about 12% of the power used by the elevator when running on full load. Note that the generator will be running idle well over 50% of the time, and sometimes as much as 70% of the time (any time the elevator is stopped at a floor and the generator is running).
2. **MG sets are less efficient than SCR drives.** A motor-generators two rotating elements operate with 72% to 81% efficiency. A static drive used in conjunction with a line transformer operates with 95% to 97% rectifier-transformer efficiency. By substituting a solid state DC drive for a motor-generator set, drive efficiency can be improved from 18% to 33%.
3. **The power factor.** At leveling speeds, SCR drives have a poorer power factor than MG sets. On the other hand, MGs running with no load have a fairly poor power factor as well. Utility rates may or may not penalize for poor power factor. Therefore, some of the effect of the power savings of static drives may be lost as the result of power factor.

Various elevator companies claim anywhere from 15% to 25% power savings using SCR drives. From the above, one can see that the actual savings depends on many elements. However, one could state conservatively that a 15% power savings is likely when substituting SCR drives for MG sets.

Maintainability

Another advantage of solid state drives is ease of maintenance. Motor generators are high speed rotating equipment. They need periodic lubrication and bearing and brush replacement. Additionally, brush wear produces carbon dust that can contaminate the machine room. Elimination of MG sets removes associated maintenance demands. These are two of the strongest arguments in favor of using static drives instead of motor generators.

Marginally Sized Emergency Generators

For static drive applications, the emergency power generator must be sized substantially larger then the total power demand required by elevators. Undersized generators can result in interaction between the two systems causing trip-off of either the emergency generator or the static drive.

Some emergency generators are sized so marginally that they are at the theoretical minimum rating necessary to provide power for the elevators. In actual field conditions, static drives can place an excessive burden on these generators, resulting in poor elevator operation, trip-off of generators, trip-off of elevators and other irregularities.

Compatibility problems result from a generators inability to cope with the rapid changes in current demand that are typical of static drives. Consequences include frequency fluctuations that can trip either system.

The first step to ensure selection of the proper elevator drive system is to review existing elevator control equipment, the power distribution system, and emergency power generation. This examination should include full load current, acceleration current, running current, feeder size, emergency generator capacity and power source (natural gas, diesel, etc.).

Ask static drive suppliers to provide the AC equivalents for full load current, acceleration current, running current, and so forth. Discuss the issue of conversion to static drives with the manufacturer of the emergency generators. Note that natural gas generators, where regulation is a function of gas pressure, are more likely to present a problem than diesel generators. As a rule of thumb, you could expect anywhere up to about 30% more current drawn by SCR drives than MG sets, depending on the efficiency of both the existing MG set and the new SCR drive.

A notable experience with static drives and emergency power regulation is an instance where the emergency generator would run empty cars, but would lift fully loaded cars only 10 of 22 floors. Regulation had to be readjusted to remedy the problem. When writing specifications you may wish to require the generator maintenance company representative be present during final testing.

Emergency Generators Sensitive to Harmonics

Static drives generate harmonic distortion that, in some instances, places an excessive burden on emergency generators. Emergency generators can be sensitive to harmonics or other power line pollution created by static drives. Ask the emergency generator manufacturer about sensitivity to harmonics and other noise.

Emergency Generators Sensitive to Power Factor

At low elevator speeds, SCR static drives have a poorer power factor than motor generator control systems (at high speed they are similar). KVA ratings for feeder transformers and wire sizing must be adequate. If emergency generators are sensitive to poor power factor, SCR drives are not recommended. Find out about power factor sensitivity from the emergency generator manufacturer.

Shared Power Distribution Systems

MG sets may be the best choice if equipment sharing the same power feeders is sensitive to harmonics and other line noise created by static drives. This can happen in hospitals, financial centers, airports, government agencies or other similar buildings where electronic devices (computers, scanners, data transmission equipment, and radio-TV transmission equipment) are present. In some cases, RFI generated by certain types of static drives, especially VFAC drives, may cause interference.

Marginal AC Power Distribution

Static drives draw current from the power distribution system differently then motor generator systems. It is extremely important to note that, in many modernizations where static drives are to be used, the existing elevators may not really be running at contract speed. As a result, power distribution systems may appear to be adequate but, after modernization, the power system may actually be marginal or even insufficient to run the elevators at contract speed. Here again, thoughtful evaluation of job site conditions is required, and motor generator systems may be preferred.

AC Line Current Magnitude Graphs for Motor Generator vs. SCR

The curves in the following graph illustrate the difference between the way current is taken from the AC line by these two types of devices. The respective AC line current magnitudes, at full speed, are very similar; however, you can see that there are substantial differences during acceleration and deceleration. The motor generator system current magnitude during acceleration has a gradually increasing curve which rises to maximum current to achieve full speed. The SCR drive has an immediate response, drawing maximum current throughout acceleration until full speed is achieved. The SCR drive is more efficient overall, but the brief extra current loads on acceleration and deceleration can create problems when the power distribution system or emergency generator is inadequate.

Figure 17.1 AC Line Current Magnitude — Motor Generator vs SCR

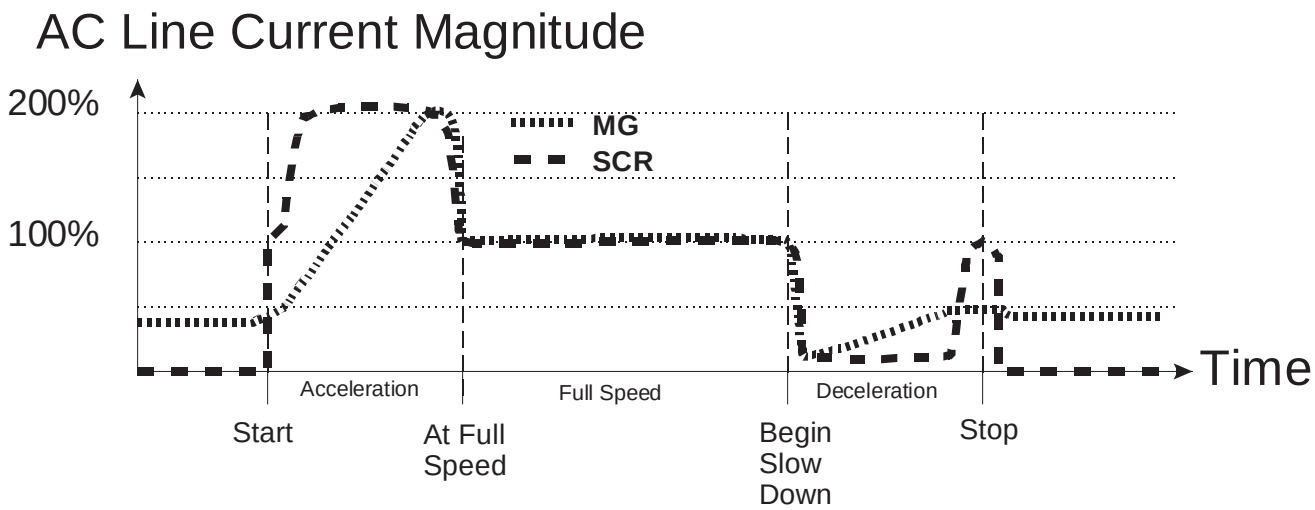

Current Requirements for SCR Drives

A good approximation for calculating the AC equivalent currents for SCR drive applications is:

$$0.82 \times \frac{\text{DC Full Load Amps x Armature Voltage}}{\text{Line Voltage}}$$

The AC equivalent current being taken from the elevator power supply is the sum of the current calculated above (SCR drive current), plus the AC current required for the controller, door operator, brake, and motor field. For maximum accuracy when determining AC line equivalents, it is best to use field data obtained during operation of the elevator at full load and full speed.

Note

Full load current typically drawn by SCR drives may be about 30% greater than that of the drive motor for the matching motor generator set.

Gearless Machines

When the hoist motor is an old gearless type with “straight slots” (motor armature slots relative to the edges of the motor field poles), torque pulsations may be created during high current conditions. This effect is subdued with MG sets, but accentuated with SCR drives of any kind.

When retaining this type of hoist motor it is best to modernize using motor generator controls. Motors with straight slots are often GE or Westinghouse gearless machines dating to 1930 or earlier. A knowledgeable elevator man can usually identify “straight slots” in gearless motors by visual inspection.

Conclusion

Selecting the best elevator control drive for a particular application is not an exact science. However, as you have seen, consideration of factors discussed here can increase the likelihood of success. With proper evaluation, the transition from motor generator controls to static drives is, in most cases, not only desirable but appropriate.

MCE’s Technical Publication series is intended to be an informative catalyst for ongoing dialogue and sharing of information between consultants, elevator contractors, owners and other interested parties. MCE Technical Publications are available on our web site at www.mceinc.com.

Don Alley, Chief Engineer
MCE R&D Staff
February 1996

AC Motor Controls for Elevators

Purpose

This technical publication is intended as a resource and guide for elevator consultants and contractors. Pertinent issues regarding proper application and installation of AC motors and drives are discussed. Information is based on our collective experience designing and manufacturing both controls and drives. Recommendations are the result of many years of experience analyzing and resolving customer problems.

Electrical noise, Radio Frequency Interference (RFI) and Electromagnetic Interference (EMI) are also addressed. Experience suggests that AC drives can generate noise that may affect radio-frequency-sensitive equipment in the building. An understanding of these phenomena is required in order to select the best possible elevator drive system for a particular application.

Overview

The application of AC drive technology to various types of AC elevator motors requires a thorough understanding of the clear advantages and tradeoffs, in order to make the very best possible choices for AC drives and motors.

In addition, comparison of AC and DC motor and drive technology does not result in a clear-cut "winning" technology to be applied universally. Rather, each technology has unique advantages and disadvantages. The choice of either must take into account a wide variety of technical, environmental, and economic factors.

For new building construction, these issues can typically be addressed during the design phase. However, when modernizing elevator systems in existing buildings, thoughtful consideration is required. In the discussion that follows, Variable Frequency AC drives are divided into two categories: inverter drives and flux vector drives.

- Inverter drives are typically used for low speed, open loop (no encoder) applications. The simplest type of AC drives, inverter drives are non-regenerative – they do not have the ability to return regenerated energy back to the AC line when overhauling (empty car up or full load down). Regenerated energy must be dissipated across resistors in the form of heat.
- Flux vector drives are typically used for high performance, closed loop (encoder required) applications with speeds above 150 fpm. Standard flux vector drives are also non-regenerative, requiring resistors for dissipating regenerated energy.

Motor Reuse or Replacement

Geared Applications – selection is job dependent:

Drive and motor selection are affected by the condition of the geared machine. When changing to a new machine, you may prefer to use an AC motor.

CAR SPEEDS TO 150 FPM (.75 m/s)

- Existing: Old AC motor
- Recommendation: Replace with New AC motor; use inverter drive

- Existing: DC motor in good condition
- Recommendation: Retain DC motor (especially above 40 HP)

- Existing: Old DC motor, below 40 HP
- Recommendation: Replace with new AC motor; use inverter drive (40 HP or above use Flux Vector Drive).

- Existing: Non-standard motor frame (hard-to-find/expensive replacement)
- Recommendation: Recondition (overhaul/rewind) existing AC motor

- Existing: Building has stringent RFI and EMI requirements
- Recommendation: Avoid changing to AC; however, when changing to AC, system may require grounding and additional filtering (anticipate costs).

CAR SPEEDS FROM 150 TO 450 FPM (.75 m/s to 2 m/sec)

- Existing: Old AC motor
- Recommendation: Replace with new AC motor; use flux vector drive.

- Existing: DC motor in good condition
- Recommendation: Retain DC motor (especially above 40 HP)

- Existing: Old DC motor, 40 HP or less
- Recommendation: Both DC and AC are good choices.
- Considerations: RFI and EMI requirements; lead time, staff training, etc. If this is your first conversion to AC there is an increased risk of making costly mistakes (i.e.: such as incorrect layout of equipment or wiring, no RFI filter, no drive isolation transformer).

- Existing: AC motor above 30 HP or...
  Helical gear machine or...
  Car speed above 300 fpm or...
  More than one car in the machine room
- Recommendation: Considerable heat will be generated when overhauling. This heat must be removed from the machine room in order to keep the controller cabinet temperature below 104F degrees.

Most Gearless Applications – DC is still the best choice

Unless the DC motor is damaged or defective, replacing it with an AC motor will not result in improved performance. Furthermore, see comments regarding delay on start. In gearless applications, since motors operate at low RPM, brush life and commutator maintenance are not significant issues.

There are two major concerns with AC gearless applications that will drive your decision making process.

- Heat: The primary concern is generation of very high heat output when overhauling which must be dissipated. For example, a 40 HP, 2:1 gearless AC with 50% counterweighting would produce 22KW of regenerated power in the form of heat.
- Cost: The alternative is to use a regenerative AC drive, which avoids the heat problem, but will cost one-and-one-half to two-and-one-half times as much as a non- regenerative drive (standard flux vector drive).

Retaining an Existing AC Motor

The following are considerations when retaining an existing AC motor. Note that newer AC motor designs are more efficient and draw less current than older single or two-speed motors. When reusing an existing AC motor, drives may have to be oversized (extra cost) in order to meet motor current requirement.

- Accurate Nameplate Information: Verify motor horsepower, voltage, full load current and full load RPM.
- Actual Full Load Current: Actual full load current is very important in order to accurately determine drive size. Particularly with older motors, nameplate data is sometimes inaccurate, illegible or missing. It is recommended that you measure motor current and RPM, with a full load, in order to calculate motor slip (see chart) and properly size the drive.
- Drive Too Small: If the drive is not sized correctly, making a change in the field requires not only a drive change, but also changing the resistors in the dynamic braking circuit.
- Drive Too Large: While a drive that is larger than necessary will not typically create problems, there is no reason to buy a larger drive than you need.

Slip Requirements

It is critical to know the exact slip of the motor in order to make the correct drive selection. Performance of vector drives, for instance, is optimized using low slip motors. You may encounter more adjustment difficulties when using a higher slip motor. There are some vector drives which simply will not operate properly with high slip motors.

Reusing an existing high slip motor may result in increased adjustment time (cost) and variations between UP vs DN speed (when using inverter drives).

Note

For gearless AC motors, calculating motor slip is not necessary because they are designed to work with modern flux vector drives.

Calculating Slip

First, check the Motor Nameplate Data and note Full Load RPM. Find the entry in the following Synchronous RPM table (under 60Hz or 50Hz as appropriate) that matches your noted Full Load RPM. (If the exact number is not in the table, use the next higher entry.) Note the corresponding number of poles listed.

Table 17.1 Determining Number of Motor Poles

Synchronous RPM		
Poles	**60Hz**	**50Hz**
8	900	750
6	1200	1000
4	1800	1500

Use the number of poles and data from the motor name plate to calculate slip frequency:

First, calculate motor slip frequency using the formula: Fs = F - ((N x P) / 120)
Where: Fs= Slip frequency (Hz)
F = Motor rated frequency (Hz)
N = Motor rated full load RPM
P = Number of poles.

Next, calculate slip percentage using the formula:

Next, calculate slip percentage using the formula: Slip% = (Fs X 100) / F
Where: F = Motor rated frequency (Hz)
Fs= Slip frequency

Example Checking the motor name plate tells you it is a 60Hz motor with Full Load RPM of 1170:

1. Check the Synchronous RPM table. 1170 is not listed under 60Hz, so you use 1200 and note that the motor has 6 poles.
2. Calculate Slip Frequency: 60 - ((1170 x 6) / 120) = 1.5
3. Calculate Slip Percentage: (1.5 x 100) / F = 2.5
4. At a Slip Percentage of 2.5, this is a low slip motor.

Slip Requirements for New Motors

(Based on current industry availability for motors to be used with Inverter & Flux Vector Drives.)

- Inverter Drives: (open loop) Motor slip should be 8% - 10%. There may be minor variations in UP vs DN speed regulation, typical of inverter drives.
- Flux Vector Drives: (closed loop) Motor slip should be 3% or less.

In general, motors with slip less than 5% are considered low slip motors and motors with slip more than 5% are considered high slip motors. The correct motor slip factor will allow the drive

to interact properly with the motor providing good performance. If motor slip is not accurately specified, the drive may not be able to control the motor properly.

Future development of drive technology may broaden the range of acceptable motor slip. For example, some drive manufacturers have developed "encoderless" vector drives, which can be thought of as a "missing link" between conventional inverter drives and true flux vector drives using encoders. These new drives are intended to provide performance superior to an inverter drive, but below that of a flux vector drive. If an encoderless vector drive is used, follow the drive manufacturer's recommendations for motor slip.

Note

The above information on motor slip is intended to be a guide. If a drive manufacturer claims to be able to handle specific motors, or recommends a particular slip range, their recommendations should be followed.

Using a New AC Motor

When replacing an existing AC or DC motor with a new AC motor, the following issues should be taken into consideration. A new motor can provide better performance and help reduce adjustment time (hidden cost). When buying a new motor be sure it is designed for AC drive applications (proper winding wire insulation).

When Buying a New Machine and Motor...

The object is to select a motor which provides the required HP at contract speed RPM required by the machine manufacturer. Machine designs typically cover three speed ranges:

- 750 - 900 RPM, Common
- 1050 - 1200 RPM, Most Common
- 1550 -1800 RPM, Less Common

Verify that the RPM required to run the machine at contract speed matches the Full Load RPM of the motor (or is at least within 5% of the Full Load RPM of the motor). Use Full Load RPM data – not synchronous RPM data – to select an AC motor.

AC Drive Operating Characteristics

Below full load RPM	Output produced in constant torque mode
Above full load RPM	Output produced in constant HP mode

This means that, above full load RPM, AC motor output torque decreases. So the Full Load RPM of a new motor must be within 5% of the RPM required to run the machine at contract speed.

Verify Correct Slip:

- Inverter drives (open loop): Motor slip should be 8% - 10%. There may be minor variations in UP vs DN speed regulation, typical of inverter drives. Future development of inverter drive technology may allow lower slip motors to be used.
- Flux vector drives (closed loop): Motor slip should be 3% or less.

Insulation

- Motor winding insulation should be properly specified for AC drive applications.

When Buying a New Motor and Using an Existing Machine...

- New motor Full Load RPM should match existing motor RPM within 5%

Note

Verify the existing motor name plate full load RPM at contract speed.

- Verify correct slip as described above.
- Motor should be designed for AC drive applications (proper winding wire insulation).

Motor Drive Packages

Recognizing the challenge presented by matching the correct AC motor and drive, MCE offers motor and drive packages. These packages offer the convenience and security of manufacturer-matched components for greater assurance of project success.

Drives are factory programmed, based on new motor characteristics, in order to offer contractors a quicker, simplified installation process and improved system operation.

Input Line Impedance

"Stiffer" AC lines in AC drive applications may cause drive damage due to transients and surges. Drive manufacturers recommend 3% line impedance minimum. A "stiff" line is defined as one where voltage drop is less than 3% at the drive input when the drive draws rated input current.

Another example of the effects of line "stiffness" is when a VFAC drive (230V/460V, 25 HP or less) is connected to a large capacity transformer (600 KVA or greater, or more then 10 times drive KVA rating). In these cases, an additional AC line reactor is required in order to increase line impedance. The additional line reactor acts as a resistor, which limits charging current to the capacitor bank in the drive during AC line transients and surges, protecting the input bridge rectifier in the drive.

This problem is more critical when line frequency is 50Hz instead of 60HZ, because line impedance varies proportionately with frequency. A line reactor provides the additional benefit of reducing voltage harmonic distortion and increasing short circuit capability.

Some older drives used internal inductors to prevent input bridge damage. Unfortunately, contemporary drives no longer include inductors, which were sacrificed on the altar of competitive pricing.

Use of an isolation transformer provides the following benefits:

- Helps meet the 3% line impedance requirement
- Provides electrical isolation between drive and power supply, reducing effects of RFI
- Reduces harmonic distortion on the line

RFI/EMI Demons: The Need for Proper Grounding

AC drives produce Radio Frequency Interference (RFI) and can potentially affect operation of equipment susceptible to this type of noise. The likelihood of encountering problems with RFI increases in older buildings where grounding is frequently inadequate.

IGBT's as a Noise Source: Modern AC drives use power devices known as Insulated Gate Bipolar Transistors, or IGBTs. These devices make it possible to minimize annoying audible noise, using switching frequencies beyond the human hearing range. Unfortunately, AC drives using IGBTs present a high potential for generating Radio Frequency Interference, or RFI.

The fast switching that characterizes these devices generates sharp-edged waveforms with high frequency components. The most likely complaint is interference with AM band radios in the 500-1600 kHz range. Noise-sensitive devices sharing the same power bus, including computer and medical equipment, could also be disrupted by interference.

How to Reduce the Effect of RFI and EMI:

- Proper grounding, including correct ground conductor sizing
- Proper routing of field wiring
- Controller design and layout
- Use RFI filters
- Use drive isolation transformers
- Higher installation "standards of care"

Grounding

One contractor experienced multiple elevator system problems that were ultimately determined to result from a lack of good grounding. A solid earth ground was provided and many electrical noise problems were eliminated. Still, the elevator controller itself was being affected by undetermined sources of noise until proper grounding principles were applied.

Proper Grounding Principles

- The ground wire to the equipment cabinet should be as large or larger than the primary AC power feeders for the controller. Ground wires should be as short as possible. Elevator system grounding should conform to all applicable codes.
- Direct, solid grounding must be provided in the machine room to properly ground the controller and motor. Indirect grounds may not provide proper grounding. Building structure grounds and water pipes can act as an antenna, radiating RFI noise. Improper grounding can render an RFI filter ineffective.
- Equipment cabinets should be grounded using a daisy chain or tree layout.
- When routing filter wiring, avoid loops (as described above) which can render filters ineffective.
- Conduit containing AC power feeders must not be used for grounding.

Figure 17.2 Correct Grounding

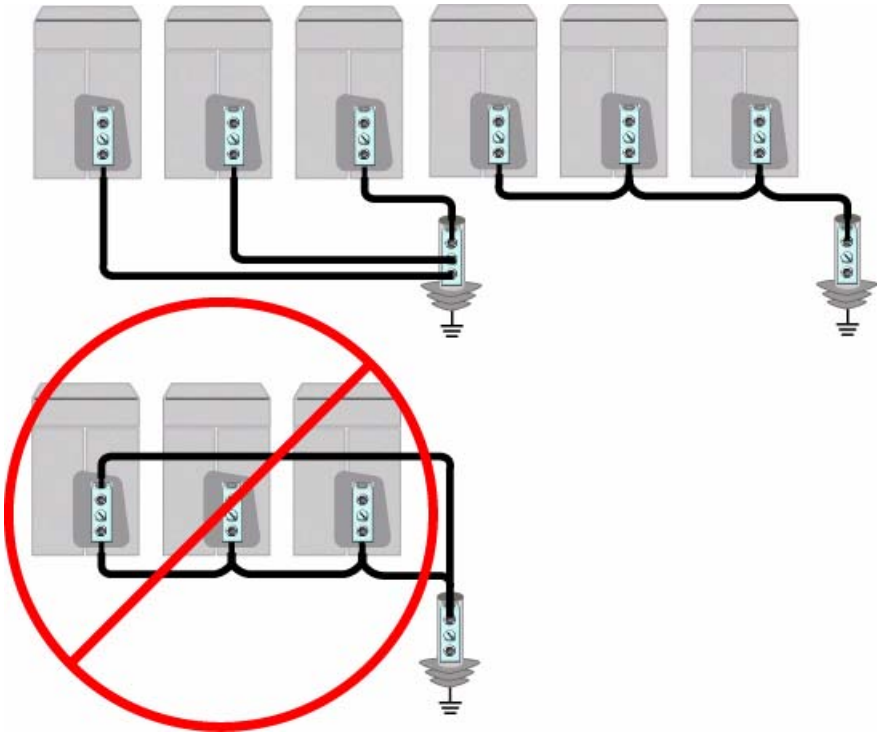

Figure 17.3 Transformer, Drive, and Motor Ground

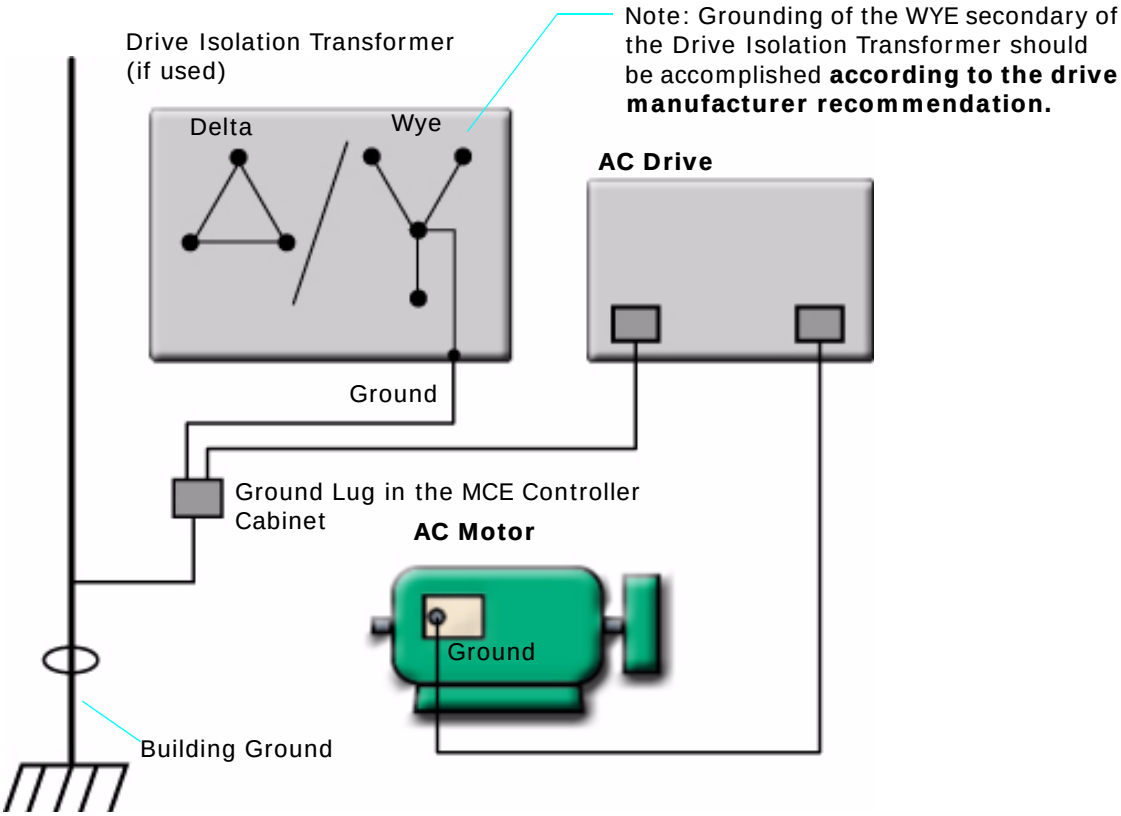

Wiring the Controller

Routing field wiring to the controller is a critical element in a quality installation. Use care to ensure that:

- Incoming power wiring (to the controller) and outgoing power wiring (to the motor) must be routed in separate grounded conduits.
- Important: Keep AC power leads separate from control wires.
- AC motor wiring, both inside and outside the control enclosure, must be kept separate from any control wiring. This separation requirement includes routing AC power feeders from the main line disconnect. No other conductors should be in the conduits for incoming AC power to the controller and outgoing power to the motor.
- Encoder wiring should be placed in a separate grounded conduit for flux vector applications.

Proper Layout

One contractor noticed that, when the controller cabinet door was opened, something affected operation of the controller microcomputers. It was eventually discovered that the problem was caused by interference from the step-down power/isolation transformer, located physically too close to the front of the controller. The ultimate remedy in this case was placing a shield between the transformer and the controller. While other methods may have also worked, these difficulties are best avoided.

It is important to recognize that, in extreme cases, the AC drive itself can be affected by electrical noise interference. Elevator machine room equipment must be laid out correctly and wired properly.

RFI Filters

The use of RFI filters is **recommended** for all AC applications where a drive isolation transformer will not be used. **MCE**'s RFI filter should be specified when AC controls are ordered.

Drive Isolation Transformers

For applications where RFI is critical (i.e.: hospitals, data processing centers, anywhere RFI-sensitive equipment is used), use of a drive isolation transformer is **recommended. MCE** can provide the isolation transformer, which should be specified when AC controls are ordered.

Marginally Sized Emergency Power Generators

Emergency power generator capacity must be sized substantially larger then the total power demand of elevator systems – for all static drive applications, AC or DC. Undersized generators can result in a variety of power-related problems.

Existing emergency power generators may be marginally sized – at the theoretical minimum rating necessary to power elevators. Under actual field conditions, static drives can place an excess burden on generators, resulting in poor elevator operation and frequent trip-off of either or both systems.

Compatibly problems result when the generating system is unable to cope with the rapid changes in current demand that typify static drives. The resulting frequency fluctuations can also cause trip-off of both systems.

Note that in general, natural gas generators – where regulation is a function of gas pressure – provide less satisfactory speed regulation (slower reaction to rapid changes in current demand) than better-regulated diesel-, turbine- and gasoline-driven generators.

Emergency Power Checklist

- Selection of the proper elevator drive system includes a thorough review of the various parameters of the existing elevator control equipment, power distribution system, and emergency power generator. This examination should include: full load current, acceleration current, feeder size, emergency generator capacity and power source (natural gas, diesel, etc.).
- Obtain the full load current, acceleration current, and so forth from static drive suppliers and manufacturers for proper sizing of emergency power generating capacity.
- Discuss the issue of conversion to static drives with the emergency power generator suppliers and manufacturers.

Emergency Generator Sensitivity to Harmonics

Static drives generate harmonic distortion that, in some instances, places an excessive burden on emergency generators. Emergency generators can be sensitive to harmonics or other power line pollution created by static drives.

- Ask the emergency power generator manufacturer about system sensitivity to harmonics and other noise.

Emergency Generator Tolerance for Regenerated Power

When emergency generators are being considered for an installation, their tolerance for regenerated power must be considered (i.e., the generator's ability to absorb energy being put back into the power lines by the AC or DC motor drive). Generally, the larger the elevator load is in proportion to the total load seen by the emergency generator, the greater the risk of emergency generator problems associated with handling regenerated power from the elevators.

Where elevators comprise up to 25% of total power consumption, as often is the case in larger buildings, regeneration is seldom a problem. However, when elevators make up a third or more of the total load, it may increasingly become an issue. The manufacturer of the emergency generator should be consulted to find how much, if any, regenerated power can be handled.

AC vs DC SCR Drive Efficiency

Generally speaking, the most efficient drive type is the AC regenerative drive, which has unity power factor under all operating conditions. While it is sometimes claimed that AC drives are "more efficient" than DC SCR drives, this would only be true of AC regenerative drives. Comparison between AC non-regenerative drives and DC SCR drives is less clear cut.

A non-regenerative AC drive (by far the most common type) cannot return regenerated energy back to the AC line when overhauling. Instead, this regenerated energy must be dissipated across resistors in the form of heat. Therefore, to the extent that regeneration is occurring, the DC SCR drive in this case is <u>more</u> efficient due to the fact that all elevator DC SCR drives <u>are</u> regenerative, i.e., capable of returning power back to the power line.

Moreover, when the AC non-regenerative drive dissipates regenerated energy in the form of heat into the machine room environment, if air conditioning equipment is required to dissipate this heat energy, the power consumed by the air conditioning <u>further</u> adds to the loss in

efficiency for the non-regenerative AC drive. However, this efficiency advantage of DC SCR drives over AC non-regenerative drives is somewhat tempered by the issue of power factor, which is highly variable for the DC SCR drive, and closer to unity for the AC non-regenerative drive.

Whether a system is geared or gearless, the amount of heat energy returned during regeneration increases in proportion to machine efficiency. The amount of regenerated power for a 30 HP geared machine, at 64% efficiency, could reach 9KW (or more) of regenerative power in the form of heat. With gearless machines, at 80%-90% efficiency, heat dissipation can easily exceed 16 KW of regenerative power for a 30 HP motor. A typical multi-car group will likely require a heat dissipation system in the machine room. When modernizing, cooling system capacity must be considered, the necessity of adding heat removal equipment determined, and future operating costs evaluated.

Hidden Costs

Use of AC drive technology represents the potential for encountering hidden costs that should be considered at time of purchase. Evaluate the following:

- Risk of improperly matched motor and drive
- Time required for system tuning and adjustment

Reliable, high quality performance should be delivered by an AC system once it is adjusted properly. However, these systems are less forgiving than DC SCR systems in a number of critical areas (as discussed in this publication). Proper care is required to protect a seemingly straightforward modernization project from substantial cost overruns.

AC applications require specialized expertise from both motor and control suppliers, along with good cooperation and coordination between the two.

Performance

A matched motor and drive pair will deliver the best ride quality. A byproduct of using the correct motor and drive is reduced adjustment time.

With regard to adjustment, AC systems should be able to achieve performance standards comparable to that of DC SCR systems, provided that the proper drive and motor are selected.

Recognize that AC drives have an inherent delay in starting, which may affect overall elevator performance time. Unlike DC applications, where the motor field is energized at all times, in AC applications, the motor is energized (via power contactor) on demand. Sufficient time must be allowed for magnetic flux to build within the motor before the brake can be lifted and the elevator car operated. Delay time may vary from 200 milliseconds to over one second, depending on motor characteristics. Therefore, all other factors being the same, the AC motor and drive must tolerate a delay on start which does not exist with DC motors and drives.

Failure to invest sufficient time and attention during the drive and motor selection stage of a project can result in longer adjustment time. On occasion, it may simply not be possible to achieve required system performance.

Heat Generation

Non-Regenerative AC Drives

In non-regenerative drives, commonly used with geared applications, overhauling energy is dissipated in the machine room through dynamic braking resistors. The amount of heat dissipated in the machine room is dependant on car speed, hoist motor horsepower, total car travel and duty factor. As any of the these factors increase, the amount of heat to be dissipated increases.

In general, if hoist motor horsepower increases above 30HP, and the elevator travel is over 100 feet, special considerations are required when sizing dynamic braking resistors. The question of how to remove this heat energy from the machine room must also be addressed.

Regenerative AC Drives

The ultimate solution to disbursing heat energy typically produced by a non-regenerative drive is to specify a regenerative VFAC drive. While relatively new to the elevator industry, these drives are quite suitable for gearless AC applications. Unfortunately, these drives presently cost more than twice what a comparable non-regenerative drive would cost.

Summary

In this publication, we have shown that the application of AC drive technology to various types of AC elevator motors must rely on a thorough understanding of the clear advantages and tradeoffs, in order to make the very best possible choices for AC drives and motors.

Our discussion has included examination of tradeoffs or possible drawbacks including the potential for increased harmonic distortion, radio frequency interference, and other issues that must be addressed in order to use AC technology successfully.

Comparison of AC and DC motor and drive technology does not result in a clear-cut “winning” technology to be applied universally. Rather, we have shown that each technology has unique advantages and disadvantages.

We have tried to arm the reader with as many facts as possible, given the limitations of the size of this document. As technology evolves, we will endeavor to continue to pass along as much information as possible to benefit our customers.

MCE R&D Staff
March 1999

Harmonic Analysis and Comparison

- SYSTEM 12 - 12 Pulse SCR Elevator Drive
- Conventional Six Pulse Elevator Drive
- Flux Vector VFAC Elevator Drive
- Includes Supplemental Jobsite Analysis

Purpose

This Technical Publication reports analysis and comparison of AC line harmonic distortion produced by three modern static drive types.

Motion Control Engineering, Inc. SYSTEM 12 using 12-pulse DC SCR drive technology is compared to a conventional 6-pulse DC SCR drive and the typical "quiet" variable frequency AC inverter or flux vector drive. Testing was conducted under "controlled" test tower conditions. This research study presents a true comparison of drive-generated AC power line distortion (harmonic distortion).

Elevator Test Tower Research Overview

Most of today's elevator control specifications require the use of static drives. Increased use and experience with static drives has focused attention on the potential for AC power supply distortion and other problems. In many cases AC power line distortion does not become a major factor. Nevertheless, it is important that everyone dealing with static drives have a basic understanding of the nature of AC line distortion.

Power supply distortion caused by static drives can result in:

1. Degraded emergency power generator performance
2. Induction motor heating
3. Power losses in transformers
4. Objectionable audible noise
5. Interference with sensitive medical equipment, computers, radios and television equipment

AC power supply distortion caused by elevator equipment is an issue for consultants, architecture/engineering firms, contractors and building owners.

This study concludes that use of MCE's SYSTEM 12 drive results in significantly less AC line distortion than most other types of static drives.

Tested Drives

Three types of static drives were evaluated for generation of harmonic distortion. They are the types in most frequent use today.

1. MCE's SYSTEM 12 using 12-pulse DC SCR drive technology for DC motors.
2. A conventional 6-pulse DC SCR drive for DC motors.
3. A variable frequency (VFAC) drive for AC motors. The tested unit is a "quiet" type utilizing "IGBT" devices.

Testing Methodology

The geared elevator installed in the test tower at MCE's Research & Development Center in Rancho Cordova (Sacramento) California was used for the tests.

The same AC power supply, drive isolation transformer, machine and elevator were used for all tests. An Imperial 20 HP DC motor was used for the DC drive tests. An Imperial 20 HP AC motor was used for the AC drive test.

It is our judgement that this methodology represents the most equitable possible arrangement for comparison of the three types of static drives.

The test tower elevator operates at 350 fpm with a 20 HP motor and a 480 VAC 3-phase power supply. The drive isolation transformer was a 27-KVA unit reconfigurable for conventional SCR or SYSTEM 12 operation. No line filter was used in any of the three drive tests. A Fluke Model 41 Power Harmonics Analyzer was used for all measurements and computations. Data was downloaded to a printer.

General comments regarding the tests:

It was decided to measure worst-case conditions for the drives. Results were evaluated during *full load acceleration in the up direction*. Up acceleration for the VFAC unit was not as great as for the DC SCR drives so the current levels were correspondingly lower. Nevertheless, the waveforms and results for all the tested drives are considered to be typical, accurately representing each drive type.

Drive Characteristics

1. MCE's SYSTEM 12, with 12-pulse DC SCR technology for elevator control applications, is a unique 12-pulse 4-quadrant, fully regenerative DC SCR drive utilizing 19 SCRs. Test results reflect the benefits of this advanced technology.
2. The conventional 6-pulse DC SCR drive was a Baldor Sweo 6-pulse 4-quadrant, fully regenerative DC SCR drive. This drive is typical of DC SCR drives generally available in the U.S. for elevator control applications. Test results are applicable to drives such as Magnetek DSD412, GE DC300E, Reliance, Emerson and others.
3. The VFAC drive evaluated was a Saftronics (Yaskawa) Flux Vector type. In regard to production of AC line harmonic distortion, the Yaskawa is considered to be typical of VFAC drives, either conventional or flux vector types. This is the case because the power supply is simply a 3-phase, six rectifier bridge feeding a capacitor bank, typical of VFAC designs presently available.

   The single exception to universal applicability of test data is a commercially available VFAC drive claiming very low levels of harmonic distortion. As far as can be determined, these product claims are accurate; however, cost is approximately two times that of any competitive drive. Thus, these drives are not considered a viable alternative to the drives examined in this study.

   Furthermore, this particular drive type, along with most other AC drives, radiates RFI (Radio Frequency Interference) in far greater amounts and across a much wider and higher band of frequencies than either 6-pulse or 12-pulse DC SCR drives. As a result, sophisticated containment strategies and careful installation practices are required to keep radiation in check.

Evaluating the Tables

Two pages of data from the Harmonic Analyzer are presented for each of the three drive types studied. The first page shows the voltage and current waveforms along with graphs showing relative magnitudes for voltage and current harmonics. The second page presents a tabular summary of the measurements taken.

The tables contain a considerable amount of information. To compare the AC line distortion generated by each of the three drives, pay particular attention to:

1. The Total Harmonic Distortion (THD Rms) values for both voltage and, especially, current -- the Voltage Total Harmonic Distortion and the Current Total Harmonic Distortion.
2. The Current Magnitude (IMag) column which shows the actual magnitude,in amperes, for each harmonic.

THD Rms measurements for current represent the total amount of current the drive is drawing from, or putting back into, the AC line at frequencies other than the main fundamental frequency of 60 Hz. These *current harmonics* originating from the drive are the “junk” that distorts the AC power line. They can be the cause of AC line problems.

THD Rms measurements for voltage represent the *voltage distortion or the amount of deviation* from a perfect 60 Hz sine wave. Voltage Total Harmonic Distortion is the result, or the effect of the current harmonics that the drive is producing.

There are a number of important facts to consider regarding current and voltage harmonics:

1. Identical current harmonic magnitudes (Current Total Harmonic Distortion) will not have the same effect on all AC power lines in terms of the amount of voltage harmonics produced (Voltage Total Harmonic Distortion).

   If the AC line is “stiff,” i.e., not easily affected, you can put a lot of current distortion on the line and voltage distortion measurements may be nominal. If the AC line is “soft” (as with a marginally sized power supply or a small emergency power generator), very moderate amounts of current distortion can generate considerable Voltage Total Harmonic Distortion, which can have serious consequences.
2. The Voltage Total Harmonic Distortion measured on the AC line is not only the result of elevator static drives. Residual base-line values can be measured by turning the drive off and recording harmonic distortion from other sources. When the static drive is on, measurements will reflect the total distortion including the base-line values plus the contribution of the elevator drive(s).

Evaluating the Data

The shape of the voltage and current waveforms provides meaningful information for evaluation of the various types of static drives. The ideal shape for both waveforms is a perfect sine wave. In all cases the voltage waveform is a close approximation of a sine wave. It is the current waveform that most clearly illustrates the effect of harmonic distortion generated by static drives.

The harmonic components generated by static drives can be calculated using the following formula:

$$H = nP \pm 1$$

where n = 1,2,3....etc. and

P = the pulse number of the diode or SCR bridge

Yaskawa Flux Vector VFAC Drive

The voltage waveform for the VFAC drive has a noticeable flattening at the top and bottom. The VFAC drive visibly distorted the voltage sine wave, which is not easy to do — the AC line for the MCE test tower elevator is very stiff.

Examination of the shape of the current waveform reveals the real story insofar as line distortion being generated by the VFAC drive is concerned. The waveform depicts how the VFAC drive draws current from the AC line. The current sine wave is obviously distorted. The VFAC is clearly the worst of all three drive types, a surprise considering the previously acknowledged superiority of AC technology in the elevator industry. The tests were repeated numerous times to verify that these figures were correct. Review of published literature corroborates findings -- suggesting that test results are typical.

Consider the bar graphs showing the relative magnitude of current harmonics. The fifth harmonic is nearly half the magnitude of the first harmonic. The first harmonic is actually the 60 Hz fundamental -- in the hypothetical ideal power system it would be the only bar illustrated.

Turning your attention to the data tables, the most important thing to note is the Current Total Harmonic Distortion (THD Rms under the Current column) at 44.3%. The current magnitude (IMag) column shows the largest harmonic (fifth) as a percentage of the 60 Hz fundamental, or 12.1 amps/28.4 amps = 42.6%. The VFAC drive demonstrates a propensity to generate harmonic distortion.

Conventional 6-Pulse DC SCR Drive

The voltage waveform doesn't provide much information because it is very close to a sine wave. This is confirmed by measured Voltage Total Harmonic Distortion of 2.6% (THD Rms under the Voltage column). Also note voltage harmonics are almost invisible on the bar graphs.

Examining the current waveform you can see that it is an improvement over the VFAC drive, but it is still only a rough approximation of a sine wave. Current harmonic distortion is apparent.

For a 6-pulse DC SCR drive, the main harmonics are five, seven, eleven, thirteen and so forth. These are the same significant harmonics as those in the VFAC drive. This is explained by the fact that the typical VFAC drive can be considered a 6-pulse system.

Looking at the data table it is important to note that Current Total Harmonic Distortion is 25.9% (THD Rms under the Current column). This is a significant improvement over the VFAC drive's numbers. The current magnitude (IMag) column shows the largest harmonic (fifth) as a percentage of the 60 Hz fundamental, or 10.6 amps/45.5 amps = 23.3%. Again, a significant improvement over the VFAC drive.

12-Pulse DC SCR Drive (MCE System 12)

As expected, the voltage waveform doesn't reveal much information because it so closely approximates a sine wave. The Voltage Total Harmonic Distortion confirms this, measured at only 2.6%, equal to the 6-pulse DC SCR drive.

The bar graph illustrating voltage harmonics appears identical to the 6-pulse DC SCR drive, but this is misleading. The AC line is very stiff and hard to effect. Further, the graph represents residual distortion on the line, not the effect of the 12-pulse DC SCR drive.

The SYSTEM 12 current waveform more closely resembles that of an ideal sine wave than either waveforms for the 6-pulse DC SCR or VFAC drives. The 12-pulse waveform shows significant improvement over the other two drive types.

When the current harmonics are examined, one can see they are greatly reduced in comparison to the other drive types. The significant harmonics for the 12-pulse drive are 11, 13, 23, 25 and so forth.

Finally, checking the data table, the Current Total Harmonic Distortion is only 13.5% (THD Rms under the Current column). This represents meaningful improvement over both the VFAC and 6-pulse DC SCR drives. The current magnitude (IMag) column shows the largest harmonic (11th) as a percentage of the 60 Hz fundamental, or 4.9 amps/44.3 amps = 11.1%.

The 12-pulse drive offers a factor of two improvement in Total Harmonic Distortion when compared to the typical 6-pulse DC SCR drive and a factor of four improvement when compared to the typical VFAC drive.

Conclusion

The purpose of this technical publication is to provide an awareness of the potential for adverse AC line distortion when elevators are controlled by static drives. It has been demonstrated how different types of static drives compare to the state-of-the-art in 12-pulse DC SCR technology.

Data indicates that non-regenerative VFAC drives present the biggest challenge insofar as AC line distortion is concerned. VFAC drives are also a potential source of RFI noise. Careful consideration is required when selecting these drives for a particular application.

This study shows that the conventional 6-pulse DC SCR drive definitely is not as clean as a 12-pulse DC SCR drive. In cases where there is any concern about AC line distortion use of the 12-pulse DC SCR drive is advisable.

Examination of the data supports the conclusion that MCE's System 12 using 12-pulse technology is the most effective method for minimizing AC line distortion.

The advantages of the 12-pulse drive are grounded in solid theory. The reader may wish to review, "Application of 12-Pulse Converters -- reducing electrical interference and audible noise from DC-motor drives" which appeared in the February 1992 issue of Elevator World magazine. Additional advantages of 12-pulse DC SCR drives are discussed in this article.

Static drive technology continually changes. As improved applications become available the nature of AC line pollution problems will also change. It is the hope of the authors that MCE's series of Technical Publications is informative and a catalyst for ongoing dialogue and sharing of information between consultants, elevator contractors, owners and other interested parties. MCE Technical Publications are available on our website at www.mceinc.com.

Don Alley, Chief Engineer
MCE R&D Staff
August 1994

Yaskawa Flux Vector VFAC Drive

MCE test tower data; 350 fpm, 20 HP AC motor, full load up acceleration. Ideal voltage and current should be illustrated as perfect sine waves. Fifth an seventh current harmonics are severe. The voltage waveform peaks are “flattened” unlike either SCR drive.

Figure 17.4 Yaskawa Flux Vector VFAC Drive

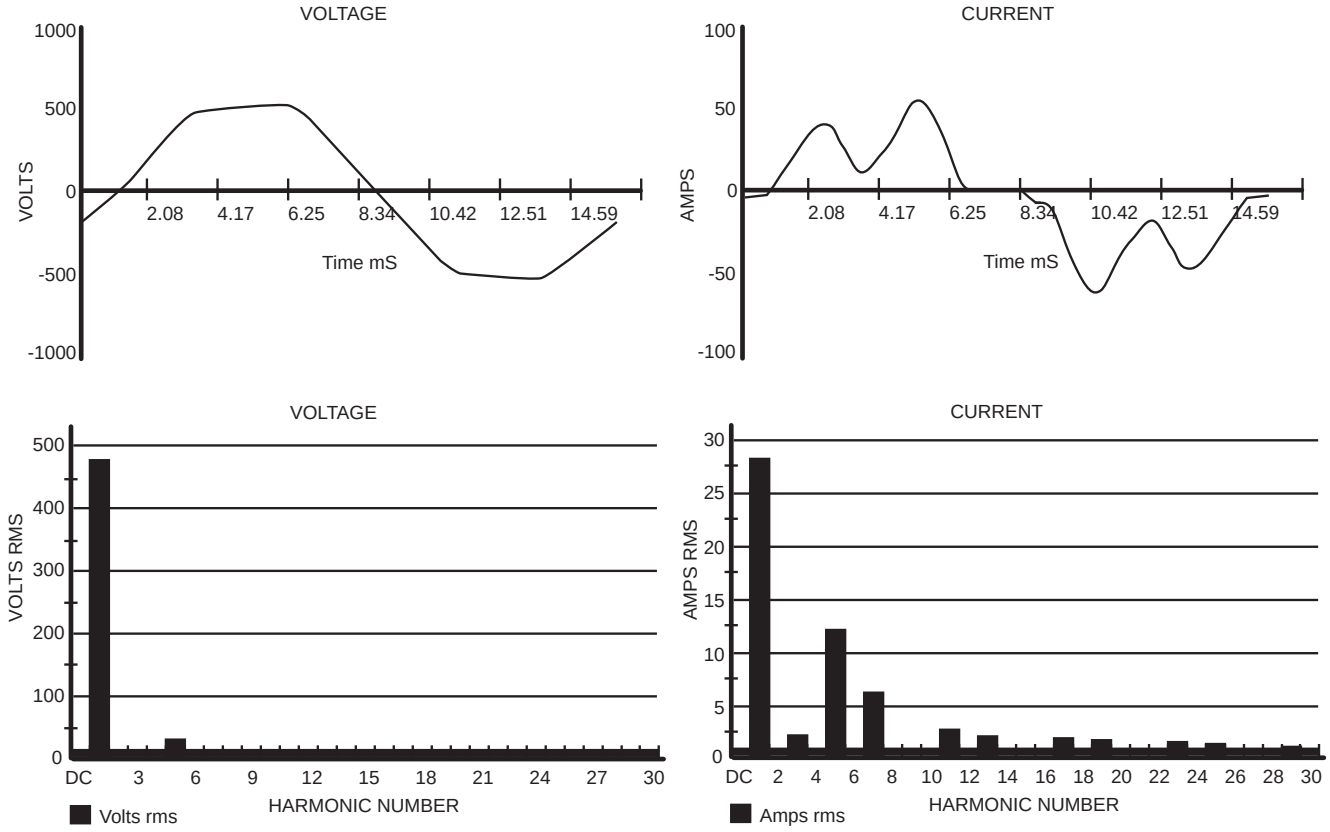

Yaskawa Flux Vector VFAC Drive

MCE test tower data; 350 fpm, 20HP AC motor, full load up acceleration. Data is considered to be typical for most VFAC drives. RMS Current Total Harmonic Distortion (THD Rms) or 44.3%. Current magnitude (Imag) of the largest harmonic (fifth) as a percentage of the 60 Hz fundamental, or 12.1 amps/28.4 amps = 42.6%.

Readings - 11/02/94 08:43:50							
Summary Information							Recorded Information
				Voltage	Current		
Frequency	60.0		RMS	473	31.7		V RMS
Power			Peak	652	59.3		A RMS
KW	13.3		DC Offset	-2	-0.4		V Peak
KVA	15.0		Crest	1.38	1.87		A Peak
KVAR	2.8		THD Rms	3.8	44.3		V THD-F%
Peak KW	38.8		THD Fund	3.8	49.4		A THD-F%
Phase	12° lead		HRMS	18	14.0		K Watts
Total PF	0.89		KFactor		7.9		KVAR
DPF	0.98						TPF
							DPF
							Frequency

Harmonic Distortion								
	Freq.	V Mag	%V RMS	V Phase	I Mag	% I RMS	I Phase	Power (KW)
DC	0.0	2	0.4	0	0.4	1.2	0	0.0
1	60.0	473	100.3	-12	28.4	90.6	0	13.1
2	119.9	0	0.1	-154	0.4	1.3	65	0.0
3	179.9	1	0.2	-75	1.9	6.0	158	0.0
4	239.8	0	0.0	-11	0.1	0.4	-125	0.0
5	299.8	18	3.8	154	12.1	38.7	-158	0.1
6	359.8	0	0.0	172	0.1	0.2	89	0.0
7	419.7	1	0.2	-141	6.1	19.6	9	0.0
8	479.7	0	0.0	72	0.1	0.2	-84	0.0
9	539.7	0	0.0	-41	0.2	0.5	-11	0.0
10	599.6	0	0.0	-146	0.1	0.2	47	0.0
11	659.6	2	0.3	59	2.2	7.1	133	0.0
12	719.5	0	0.0	46	0.0	0.0	-95	0.0
13	799.5	1	0.2	120	1.2	3.9	-106	0.0
14	839.5	0	0.0	5	0.0	0.1	150	0.0
15	899.4	0	0.0	164	0.1	0.2	-128	0.0
16	959.4	0	0.0	42	0.0	0.0	-165	0.0
17	1019.3	1	0.2	-38	1.0	3.1	27	0.0
18	1079.3	0	0.0	39	0.0	0.0	-32	0.0
19	1139.3	1	0.1	-1	0.5	1.7	131	0.0
20	1199.2	0	0.0	92	0.0	0.1	44	0.0
21	1259.3	0	0.0	53	0.1	0.2	46	0.0
22	1319.2	0	0.0	17	0.0	0.1	-176	0.0
23	1379.1	1	0.1	-143	0.5	1.7	-83	0.0
24	1439.1	0	0.0	41	0.0	0.0	81	0.0
25	1499.0	1	0.1	-120	0.3	0.9	7	0.0
26	1559.0	0	0.0	134	0.0	0.1	-54	0.0
27	1619.0	0	0.0	-144	0.1	0.2	-37	0.0
28	1678.9	0	0.0	155	0.0	0.0	-70	0.0
29	1738.9	1	0.1	89	0.4	1.1	169	0.0
30	1798.8	0	0.0	113	0.0	0.0	59	0.0
31	1858.8	0	0.1	136	0.2	0.7	-119	0.0

Conventional 6-Pulse DC SCR Drive

Data taken from MCE test tower; 350 fpm, 20 HP DC motor, full load up acceleration. Ideal voltage and current should be illustrated as perfect sine waves. Note that the largest current harmonics are the fifth and seventh. This data is typical and would be identical for a 6-pulse SCR drive of any manufacturer.

Figure 17.5 Conventional 6-Pulse DC SCR Drive

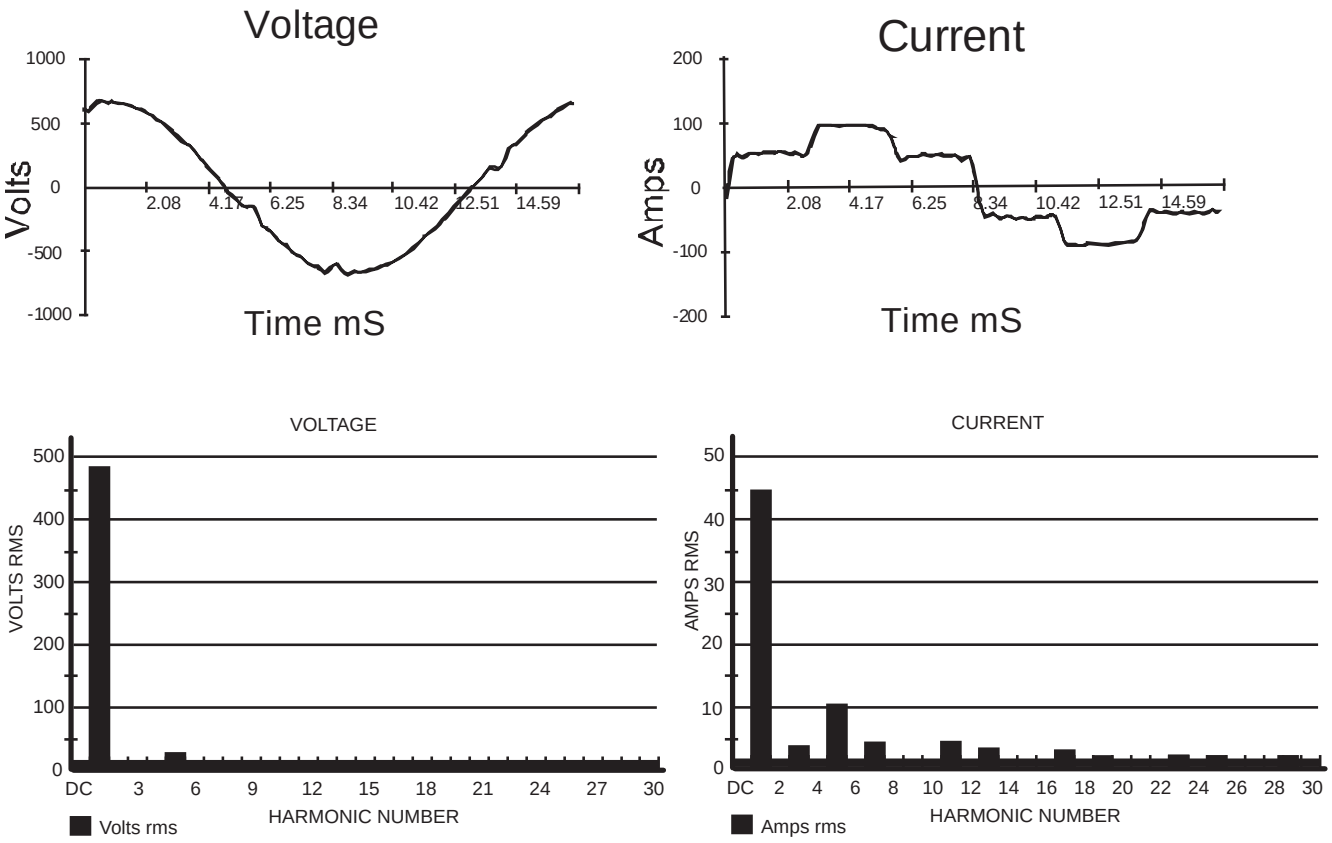

Conventional 6-Pulse DC SCR Drive

Data from MCE test tower, 350 fpm, 20HP DC motor, full load up acceleration. Note particularly the RMS Current Total Harmonic Distortion (THD RMS of 25.9%). Also note the current magnitude (Imag) of the largest (fifth) as a percentage of the 60 Hz fundamental, or 10.6 amps/45.5 amps = 23.3%.

Readings - 09/22/94 16:12:57							
Summary Information							Recorded Information
				Voltage	Current		
Frequency	60.0		RMS	484	47.3		V RMS
Power			Peak	695	65.9		A RMS
KW	16.8		DC Offset	-2	-0.3		V Peak
KVA	22.9		Crest	1.44	1.39		A Peak
KVAR	14.4		THD Rms	2.6	25.9		V THD-F%
Peak KW	46.8		THD Fund	2.6	26.9		A THD-F%
Phase	41° lag		HRMS	12	12.2		K Watts
Total PF	0.74		KFactor		5.1		KVAR
DPF	0.76						TPF
							DPF
							Frequency

Harmonic Distortion						
	Freq.	V Mag	%V RMS	V Phase	I Mag	% I RMS
DC	0.0	2	0.3	0	0.3	0.6
1	60.0	484	100.3	41	45.5	96.9
2	119.9	0	0.1	65	0.7	1.5
3	179.9	1	0.1	56	2.0	4.2
4	239.8	0	0.0	-105	0.1	0.1
5	299.8	11	2.4	130	10.6	22.5
6	359.8	0	0.0	-95	0.1	0.2
7	419.7	2	0.5	49	3.1	6.5
8	479.7	0	0.0	-39	0.1	0.3
9	539.7	0	0.0	142	0.4	0.8
10	599.6	0	0.0	30	0.1	0.3
11	659.6	2	0.5	-90	3.3	7.0
12	719.5	0	0.0	-13	0.2	0.3
13	799.5	2	0.3	-138	2.1	4.5
14	839.5	0	0.0	23	0.1	0.1
15	899.4	0	0.1	-98	0.4	0.8
16	959.4	0	0.0	84	0.0	0.1
17	1019.3	1	0.3	108	1.7	3.6
18	1079.3	0	0.0	94	0.1	0.1
19	1139.3	1	0.3	39	1.4	3.0
20	1199.2	0	0.0	-49	0.0	0.1
21	1259.3	0	0.0	70	0.3	0.7
22	1319.2	0	0.0	0	0.1	0.2
23	1379.1	1	0.3	-84	1.1	2.3
24	1439.1	0	0.0	-40	0.1	0.2
25	1499.0	1	0.3	-146	1.0	2.2
26	1559.0	0	0.0	-47	0.1	0.1
27	1619.0	0	0.0	-136	0.3	0.6
28	1678.9	0	0.0	41	0.0	0.1
29	1738.9	1	0.2	86	0.7	1.4
30	1798.8	0	0.0	96	0.0	0.1
31	1858.8	1	0.2	34	0.7	1.5

12-Pulse SCR Drive (MCE System 12)

Data taken from MCE test tower; 350 fpm, 20 HP DC motor, full load up acceleration. Ideal voltage and current should be illustrated as perfect sine waves. Note that the largest current harmonics are the eleventh and thirteenth.

Figure 17.6 MCE 12-Pulse SCR Drive

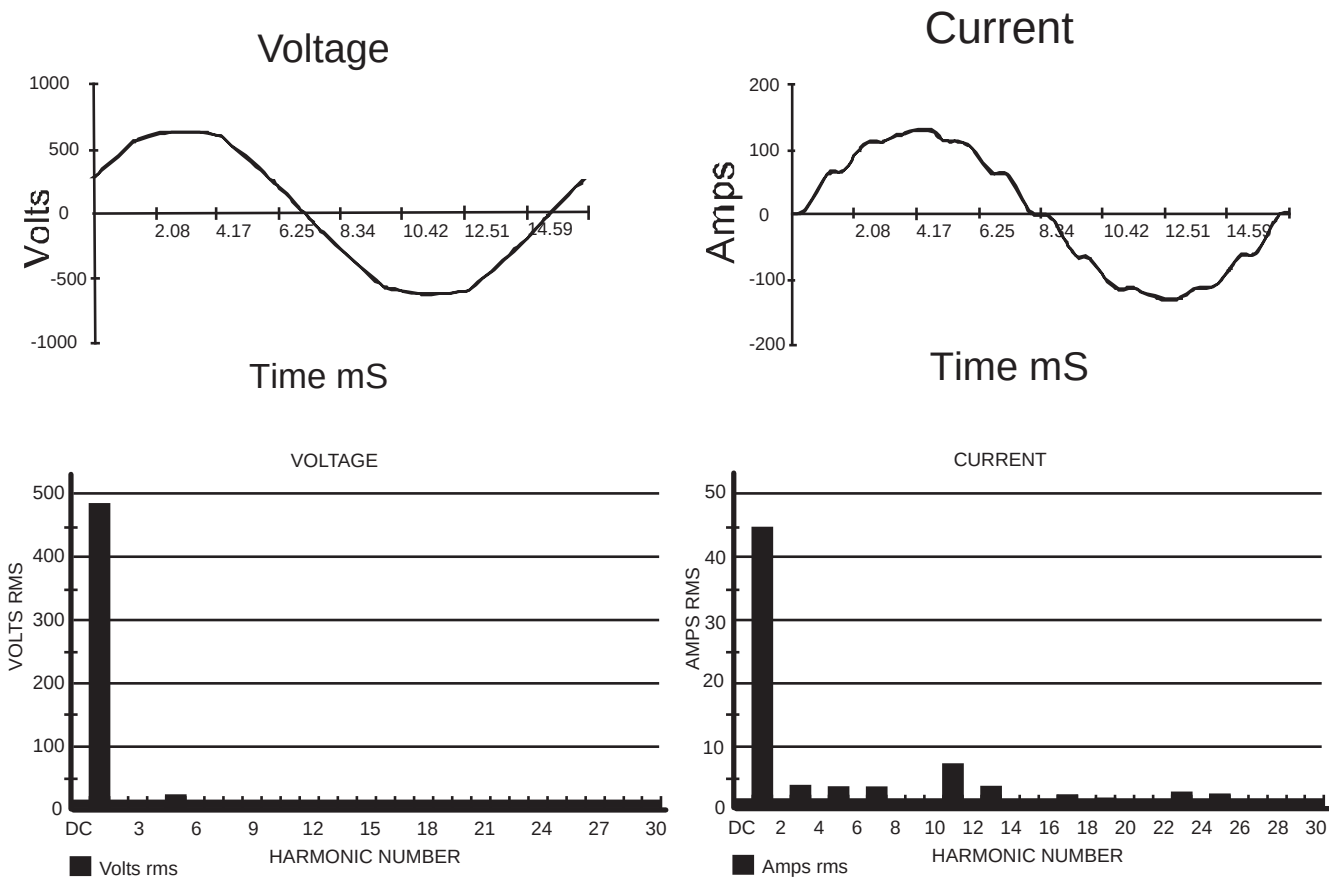

12-Pulse DC SCR Drive (MCE SYSTEM 12)

Data taken from MCE test tower, 350 fpm, 20 HP DC motor, full load up acceleration. Note particularly the RMS Current Total Harmonic Distortion (THD RMS of 13.5%. Also note the current magnitude (Imag) of the largest (eleventh) as a percentage of the 60 Hz fundamental, or 4.9 amps/45.3 amps = 11.1%.

Readings - 08/25/94 11:40:17							
Summary Information							Recorded Information
				Voltage	Current		
Frequency	60.0		RMS	487	44.7		V RMS
Power			Peak	699	65.1		A RMS
KW	17.8		DC Offset	-2	-0.3		V Peak
KVA	21.8		Crest	1.43	1.46		A Peak
KVAR	12.0		THD Rms	2.6	13.5		V THD-F%
Peak KW	45.1		THD Fund	2.6	13.6		A THD-F%
Phase	34° lag		HRMS	13	6.0		K Watts
Total PF	0.82		KFactor		3.5		KVAR
DPF	0.83						TPF
							DPF
							Frequency

Harmonic Distortion						
	Frequency	V Mag	%V RMS	V Phase	I Mag	% I RMS
DC	0.0	2	0.4	0	0.3	0.7
1	60.0	487	100.3	34	44.3	99.8
2	119.9	1	0.1	-107	0.1	0.1
3	179.9	1	0.2	70	1.8	4.1
4	239.8	0	0.1	-75	0.1	0.1
5	299.8	12	2.4	86	1.3	2.9
6	359.8	0	0.0	67	0.0	0.0
7	419.7	1	0.3	15	1.4	3.2
8	479.7	0	0.0	138	0.0	0.1
9	539.7	0	0.0	-140	0.4	0.9
10	599.6	0	0.0	165	0.1	0.1
11	659.6	3	0.7	105	4.9	11.1
12	719.5	0	0.0	-97	0.1	0.2
13	799.5	2	0.3	-3	1.5	3.3
14	839.5	0	0.0	-59	0.0	0.1
15	899.4	0	0.0	-25	0.1	0.2
16	959.4	0	0.0	141	0.0	0.1
17	1019.3	1	0.1	-57	0.5	1.2
18	1079.3	0	0.0	-158	0.0	0.0
19	1139.3	0	0.1	12	0.4	0.8
20	1199.2	0	0.0	171	0.0	0.0
21	1259.3	0	0.0	8	0.1	0.3
22	1319.2	0	0.0	26	0.0	0.1
23	1379.1	2	0.3	-84	1.4	3.0
24	1439.1	0	0.0	-10	0.1	0.2
25	1499.0	1	0.3	-146	0.8	1.8
26	1559.0	0	0.0	169	0.0	0.1
27	1619.0	0	0.0	-65	0.0	0.0
28	1678.9	0	0.0	-128	0.0	0.1
29	1738.9	0	0.1	157	0.2	0.4
30	1798.8	0	0.0	-94	0.0	0.0
31	1858.8	0	0.1	-115	0.1	0.3

Supplemental Job Site Analysis

Purpose

Supplemental jobsite analysis was undertaken to compare the results of the Test Tower study with actual jobsite measurements. The general discussions of the Test Tower Research are applicable to this supplemental study.

Tested Drives

Two types of static drives were evaluated at the jobsite. They are the Magnatek 6-pulse DC SCR drive and MCE's ***SYSTEM 12*** using 12-pulse DC SCR drive. The job sites are as follows:

1. 1) International Towers Building -- 700 fpm; 2500 lb capacity; Magnatek 6-pulse drive; General Dynamics ED machine; 35.4 HP; 115 amp/260 volt armature; 480 AC line voltage.
2. 2)Plaza Building -- 500 fpm; 3000 lb capacity; MCE ***SYSTEM 12***; Otis 131HT machine; 32 HP; 177 amp/150 volt armature; 480 AC line voltage.

Testing Methodology

The gearless elevators were tested using a Fluke Model 41 Power Harmonics Analyzer for all measurements and computations. Data was take from the primary side of the isolation transformers and downloaded to a printer. It was decided to measure worst-case conditions for the drives, which in the absence of test weights, is during empty car acceleration in the down direction.

Evaluating the Data

Conventional 6-Pulse DC SCR Drive - International Towers Building

The voltage waveform doesn't provide much information because it is very close to a sine wave. This is confirmed by measured Voltage Total Harmonic Distortion of 4.1% (THD Rms under the Voltage column). Note that voltage harmonics are insignificant on the bar graphs.

For a 6-pulse DC SCR drive, the main harmonics are five, seven, eleven, thirteen and so forth. Looking at the data table it is important to note that Current Total Harmonic Distortion is 26.9% (THD Rms under the Current column). The current magnitude (Imag) column shows the largest harmonic (fifth) as a percentage of the 60 Hz fundamental, or 13.7 amps/64.7 amps = 21.2%.

12-Pulse DC SCR Drive - Plaza Building

As expected, the 12-pulse voltage waveform doesn't reveal any more information than the 6-Pulse voltage waveform because it also closely approximates a sine wave. The Voltage Total Harmonic Distortion confirms this, measured at only 2.5% lower than that of the

6-pulse DC SCR drive.

The SYSTEM 12 current waveform more closely resembles that of an ideal sine wave than the waveform for the 6-pulse DC SCR. When the current harmonics are examined, one can see they are greatly reduced in comparison to the 6-pulse drive. The significant harmonics for the 12-pulse drive are 11, 13, 23, 25 and so forth.

Finally, checking the data table, the Current Total Harmonic Distortion is **only 6.5%** (THD Rms under the Current column). This represents meaningful improvement over the 6-pulse DC SCR drive. The current magnitude (Imag) column shows the largest harmonic (11th) as a percentage of the 60 Hz fundamental, or 4.7 amps/93.3 amps = 5.0%.

The Plaza Building SYSTEM 12 drive offers a factor of four improvement in Total Harmonic Distortion when compared to the International Towers Building 6-pulse DC SCR drive.

Conclusion

The supplemental analysis further validates the hypotheses of the Test Tower Research in that a 12-pulse SCR drive produces substantially less harmonic distortion than other static drives typically used. It must be noted that levels of Harmonic Distortion will vary from installation to installation as the result of job-specific variables (current drawn, car direction and loading, line stiffness, other static drives sharing the line, baseline distortion).

Conventional 6-Pulse DC SCR Drive

Data taken from International Tower Building; 700 fpm, 5.4 HP DC motor, empty car down acceleration. Ideal voltage and current should be illustrated as perfect sine waves. Note that the largest current harmonics are the fifth and seventh. This data is typical and would be identical for any 6-pulse SCR drive of any manufacturer.

Figure 17.7 Conventional 6-Pulse DC SCR Drive

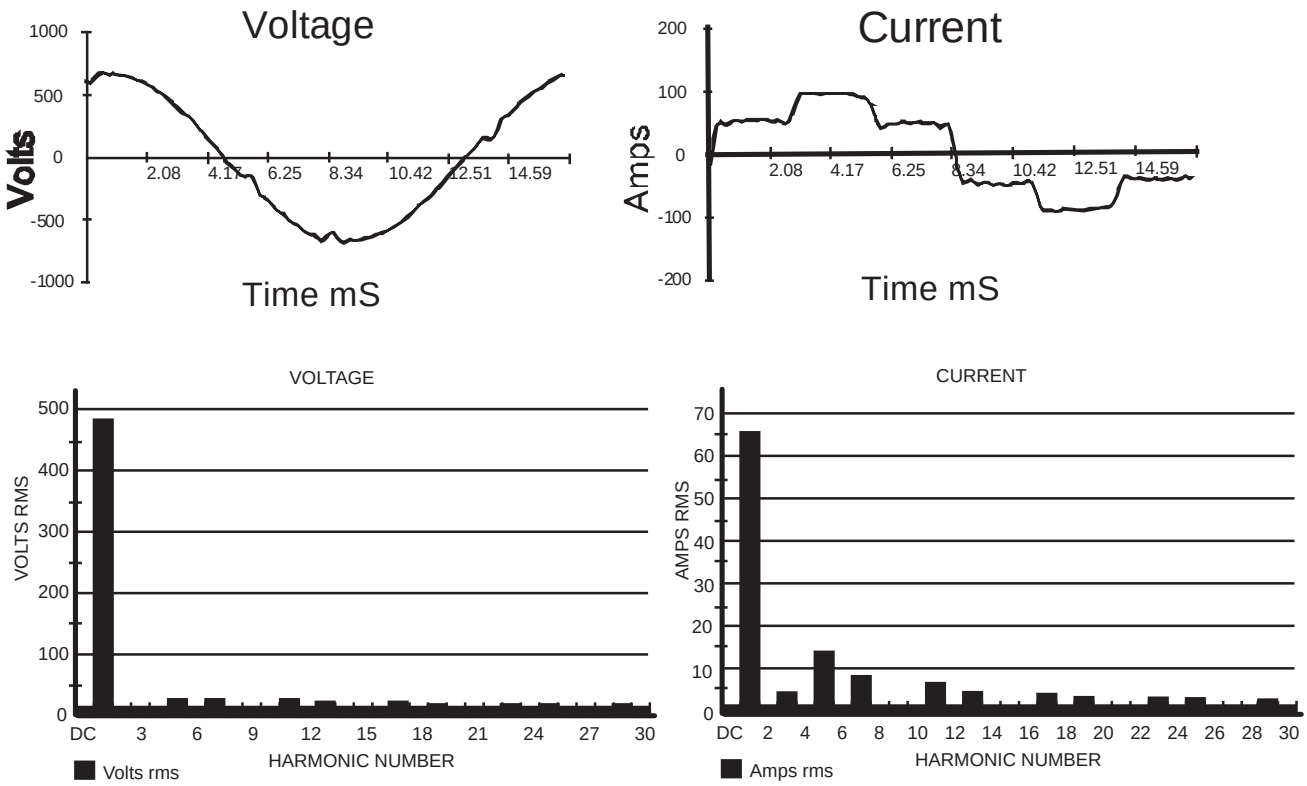

Conventional 6-Pulse DC SCR Drive

Data taken from International Tower Building – 700 fpm, 35.4 HP DC motor, empty car down acceleration. Note particularly the RMS Current Total Harmonic Distortion (THD RMS of 26.9%. Also note the current magnitude (Imag) of the largest (fifth) as a percentage of the 60 Hz fundamental, or 13.7/64.7 amps = 21.2%.

Readings - 11/03/95 15:59:14							
Summary Information							Recorded Information
				Voltage	Current		
Frequency	60.0		RMS	484	67.2		V RMS
Power			Peak	692	97.9		A RMS
KW	7.1		DC Offset	-1	-0.3		V Peak
KVA	32.5		Crest	1.43	1.46		A Peak
KVAR	30.5		THD Rms	4.1	26.9		V THD-F%
Peak KW	39.4		THD Fund	4.1	27.9		A THD-F%
Phase	77° lag		HRMS	20	18.1		K Watts
Total PF	0.22		KFactor		7.5		KVAR
DPF	0.22						TPF
							DPF
							Frequency

Harmonic Distortion								
	Freq.	V Mag	%V RMS	V Phase	I Mag	% I RMS	I Phase	Power (KW)
DC	0.0	1	0.3	0	0.3	0.5	0	0.0
1	60.0	484	100.2	77	64.7	96.7	0	6.8
2	119.9	0	0.1	-68	0.3	0.5	94	0.0
3	179.9	1	0.2	-127	1.4	2.1	-51	0.0
4	239.8	0	0.0	-27	0.2	0.3	46	0.0
5	299.8	10	2.0	-175	13.7	20.5	-11	-0.1
6	359.8	1	0.1	-37	0.1	0.1	98	0.0
7	419.7	7	1.4	-94	7.5	11.2	-14	0.0
8	479.7	0	0.0	-31	0.2	0.3	82	0.0
9	539.7	1	0.2	101	0.4	0.6	-164	0.0
10	599.6	0	0.0	-15	0.2	0.3	49	0.0
11	659.6	7	1.4	-147	5.6	8.3	-21	0.0
12	719.5	0	0.0	-56	0.1	0.1	56	0.0
13	799.5	5	1.1	-104	4.1	6.1	-32	0.0
14	839.5	0	0.0	-61	0.2	0.3	70	0.0
15	899.4	1	0.1	0	0.2	0.3	110	0.0
16	959.4	0	0.1	-46	0.2	0.3	39	0.0
17	1019.3	7	1.4	-164	3.4	5.1	-38	0.0
18	1079.3	0	0.0	-63	0.1	0.1	29	0.0
19	1139.3	5	1.0	-108	2.6	3.8	-42	0.0
20	1199.2	0	0.1	-51	0.2	0.3	60	0.0
21	1259.3	0	0.1	-108	0.1	0.1	-12	0.0
22	1319.2	0	0.1	-58	0.2	0.3	15	0.0
23	1379.1	6	1.2	179	2.3	3.4	-53	0.0
24	1439.1	0	0.1	-59	0.1	0.1	37	0.0
25	1499.0	5	1.1	-117	2.0	2.9	-53	0.0
26	1559.0	0	0.1	-77	0.2	0.3	37	0.0
27	1619.0	0	0.1	150	0.1	0.1	-116	0.0
28	1678.9	0	0.1	-71	0.2	0.3	0	0.0
29	1738.9	5	1.0	169	1.6	2.4	-64	0.0
30	1798.8	0	0.1	-87	0.1	0.1	-2	0.0
31	1858.8	5	1.0	-136	1.6	2.4	-71	0.0

12-Pulse SCR Drive (MCE System 12)

Data taken from the Plaza Building; 500 fpm, 32 HP DC motor, empty car down acceleration. Ideal voltage and current should be illustrated as perfect sine waves. Note that the largest current harmonics are the eleventh and thirteenth.

Figure 17.8 12-Pulse SCR Drive (MCE System 12)

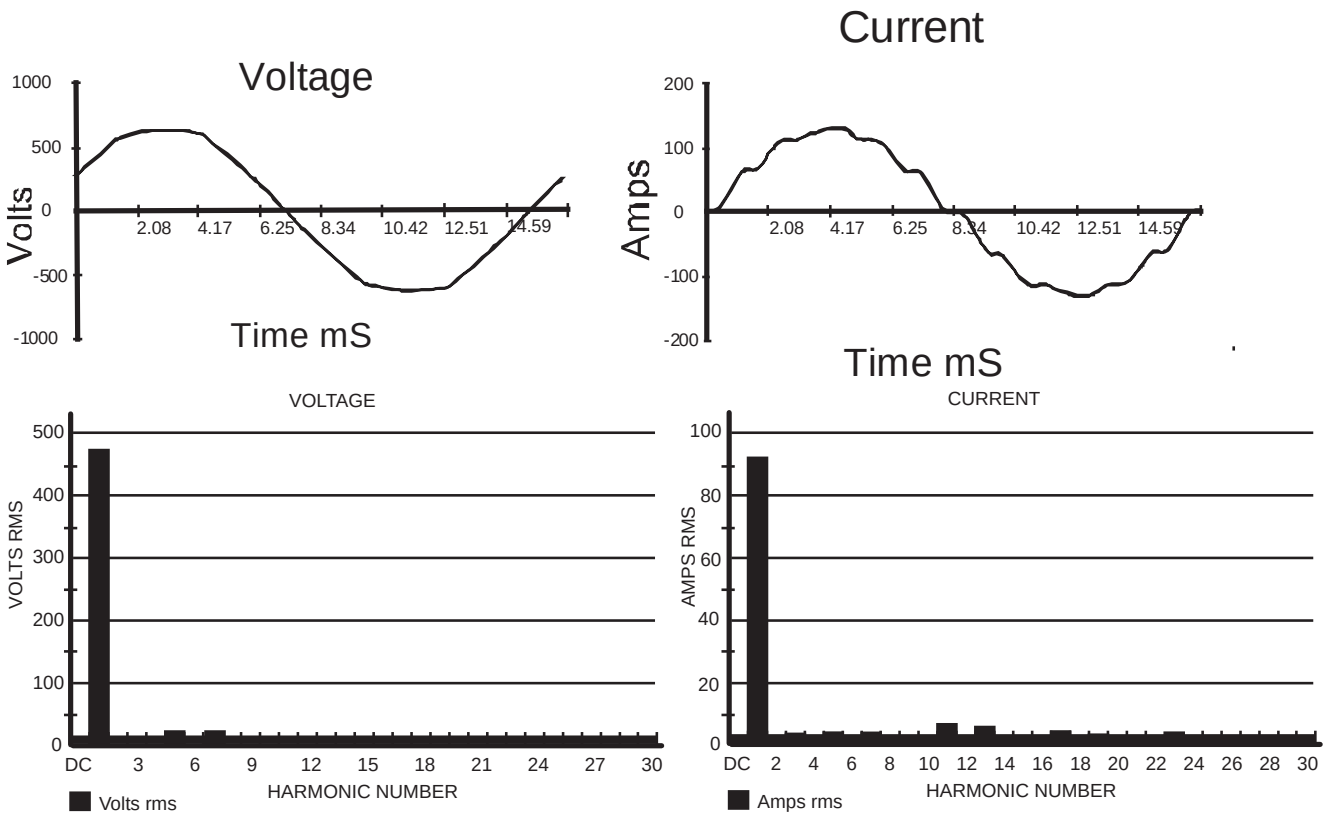

12-Pulse DC SCR Drive (MCE System 12)

Data taken from Plaza Building, 500 fpm, 32 HP DC motor, empty car down acceleration. Note particularly the RMS Current Total Harmonic Distortion (THD RMS of 13.5%. Also note the current magnitude (Imag) of the largest (eleventh) as a percentage of the 60 Hz fundamental, or 4.7 amps/93.5 amps = 5.0%.

Readings - 11/06/95 15:31:22							
Summary Information							Recorded Information
				Voltage	Current		
Frequency	60.0		RMS	469	93.7		V RMS
Power			Peak	645	135.3		A RMS
KW	39		DC Offset	-2	-0.4		V Peak
KVA	44		Crest	1.38	1.44		A Peak
KVAR	20		THD Rms	2.5	6.5		V THD-F%
Peak KW	85		THD Fund	2.5	6.6		A THD-F%
Phase	27° lag		HRMS	12	6.1		K Watts
Total PF	0.89		KFactor		1.6		KVAR
DPF	0.89						TPF
							DPF
							Frequency

Harmonic Distortion								
	Freq.	V Mag	%V RMS	V Phase	I Mag	% I RMS	I Phs	Power (KW)
DC	0.0	2	0.3	0	0.4	0.4	0	0.0
1	60.0	469	100.3	27	93.5	100.1	0	6.8
2	119.9	0	0.1	-115	0.2	0.2	143	0.0
3	179.9	1	0.3	122	0.5	0.5	-167	0.0
4	239.8	0	0.1	-41	0.1	0.2	77	0.0
5	299.8	8	1.7	-37	1.0	1.1	-160	-0.1
6	359.8	0	0.0	18	0.0	0.0	32	0.0
7	419.7	7	1.6	-168	1.0	1.1	137	0.0
8	479.7	0	0.0	124	0.1	0.2	-91	0.0
9	539.7	1	0.1	-18	0.1	0.1	59	0.0
10	599.6	0	0.0	158	0.2	0.2	-148	0.0
11	659.6	3	0.6	131	4.7	5.0	171	0.0
12	719.5	0	0.0	-112	0.1	0.1	124	0.0
13	799.5	2	0.4	17	3.5	3.7	179	0.0
14	839.5	0	0.0	-79	0.1	0.1	42	0.0
15	899.4	0	0.1	102	0.1	0.2	84	0.0
16	959.4	0	0.0	-5	0.1	0.1	-69	0.0
17	1019.3	2	0.4	-46	0.3	0.4	-60	0.0
18	1079.3	0	0.0	89	0.0	0.0	-169	0.0
19	1139.3	1	0.2	128	0.2	0.2	4	0.0
20	1199.2	0	0.0	107	0.0	0.0	-138	0.0
21	1259.3	0	0.1	-101	0.1	0.1	153	0.0
22	1319.2	0	0.0	-46	0.0	0.0	136	0.0
23	1379.1	1	0.3	98	0.7	0.7	-179	0.0
24	1439.1	0	0.0	-146	0.0	0.0	84	0.0
25	1499.0	1	0.2	-84	0.4	0.4	97	0.0
26	1559.0	0	0.0	-79	0.1	0.1	-55	0.0
27	1619.0	0	0.1	32	0.0	0.0	-51	0.0
28	1678.9	0	0.0	0	0.0	0.0	-97	0.0
29	1738.9	1	0.2	-120	0.3	0.3	-19	0.0
30	1798.8	0	0.0	-165	0.0	0.0	-158	0.0
31	1858.8	1	0.1	51	0.1	0.1	-33	0.0

AC Inverter Drives Electrical Noise & RFI

Purpose

This Technical Publication discusses electrical noise and Radio Frequency Interference (RFI) created by AC Inverter drives and possible effects on other equipment.

Motion Control Engineering, Inc. experience with AC inverter drives suggests that they can generate noise that may affect radio frequency sensitive equipment in the building. This phenomenon needs to be understood and considered prior to selection of an elevator drive system.

Overview

It is generally believed that AC inverter drives are the ideal technology providing maximum power savings, reduced motors cost and lower maintenance costs. AC inverter drives have tradeoffs that need to be recognized and understood. These tradeoffs (potential drawbacks) include greater harmonic distortion, radio frequency interference and other idiosyncrasies that can make typically used AC drives unfriendly.

In most instances, new construction design can address these issues; however, elevator modernization in existing buildings requires thoughtful consideration. It is important to have a basic understanding of the tradeoffs that are determining factors in the drive selection process.

Static Drives

MCE Technical Publications “Harmonic Analysis & Comparison” and “Motor Generator vs SCR” explored considerations for drive selection for a particular elevator control application. Issues addressed in these publications apply to all static drives, including the typical AC inverter drive.

Radio Frequency Interference “RFI”

AC inverter drives can produce sufficient amounts of Radio Frequency noise (RFI) that affect the operation of equipment susceptible to Radio Frequency noise. This is particularly true in older buildings when grounding is lacking or otherwise inadequate.

One example of a substantial RFI problem is a brick apartment complex, built in the mid 20's, where the elevator contractor was in the process of modernizing existing AC elevator equipment. After the first cars were modernized (new controllers included RFI filtering devices), the building superintendent complained that he was unable to listen to his favorite radio station because of interference from the elevators. He stated that the vintage AC elevator controls caused no problems; however, the state-of-the-art static drives generated disruptive RFI.

The building manager, considering the complaint unfounded, suggested that the superintendent select a different radio station. The superintendent reported the incident to the FCC. Subsequently, the contractor received an FCC notice to immediately respond and resolve the problem.

At the building the complaint was verified using an inexpensive AC plug in radio and the superintendent's portable battery operated radio equipped with all the latest technology. In the elevator machine room the AC radio was tuned to the AM band and, as expected, there was a considerable amount of interference. At roof level the battery operated radio, tuned to the same frequencies, performed slightly better; however, a considerable amount of interference was evidenced.

In an apartment on the fourth floor, located in the middle of the building, both radios demonstrated a similar level of interference. Conditions were found to be the same in an apartment on the first floor. Outside, in the courtyard which is surrounded by many buildings, AM band station signals were very strong and free of interference.

Simply stepping back inside at the first floor entrance the interference returned. Using the battery operated radio, as the elevator ran one could hear interference during both acceleration and deceleration.

The conclusion, later confirmed by the drive manufacturer, was that the building, without a solid earth ground, was acting as an antenna. Grounding of the elevator drive system and motor was occurring through water pipes and whatever other steel may have been present in this brick building.

The drive manufacturer did additional research to identify some probable causes. The contractor needed to provide a proper earth ground, ground the controller and the motor to this proper earth ground, and use insulated bushings to isolate other devices from the controller and motor to prevent grounding to or through the water piping system. These recommendations are, generally, requirements of the National Electrical Code, but they are sometimes overlooked. An additional suggestion would have been to try an isolation transformer. The drive manufacturer subsequently confirmed the transformer may not have helped in absence of a proper earth ground.

This is one example of how RF noise pollution can unintentionally be propagated throughout a building. Improper grounding conditions make this possible. Nonetheless, grounding alone may not be the cause of some RFI problems. Certain incorrect installation and wiring practices can also create serious RFI problems.

IGBTs

All modern AC Inverter drives use power devices known as Insulated Gate Bipolar Transistors (IGBTs). These devices make it possible to minimize annoying audible noise by using switching frequencies beyond the audible range. Unfortunately, AC inverter drives using IGBTs, present a high potential for generating RFI -- Radio Frequency Interference.

Fast switching in these devices generates sharp-edged waveforms with high frequency components that generate more RFI. The most likely complaint is interference with AM band radios 500-1600 Khz. Nonetheless, sensitive computers, medical equipment and other noise-sensitive devices sharing the same power buss could experience serious interference.

In extreme cases, the AC inverter drive itself can experience electrical noise interference. If elevator machine room equipment is not correctly laid out and properly wired, the electrical noise propagated by the elevator drive system can interfere with the elevator controller.

An example is the building lacking a solid grounding system where the elevator system experienced multiple problems. A solid earth ground was provided to eliminate many electrical noise problems, yet the elevator controller itself was being affected by undetermined sources of noise.

The routing of the contractor's field wiring into the controller was examined and several deficiencies were found and corrected. It was subsequently determined that the step down power/isolation transformer required by this particular application was physically located too close to the front of the controller. With the controller door open, the transformer created interference that affected the control microcomputers. The remedy was placement of a shield between the transformer and the controller, although other methods may have also worked.

Reducing/Preventing Electrical Noise

Electrical noise, whether it is conducted or radiated, can create unusual phenomenon that are difficult to evaluate. To avoid the effects of electrical noise pollution, consider:

- Proper grounding including correct ground conductor sizing
- Contractors routing of field wiring
- Controller and motor isolation to prevent indirect grounds
- Controller design and layout
- RFI filters
- Isolation transformers
- Higher standards of care by the installing contractor

Warnings from Manufacturers

MCE

Motion Control Engineering warns, in job specific manuals, "For proper operation of the AC inverter drive unit in your controller, you must make sure that a direct solid ground is provided in the machine room to properly ground the controller and the motor.

Indirect grounds such as building structure or water pipe may not provide proper grounding and could act as an antenna to radiate RFI noise, thus disturbing sensitive equipment in the building.

Improper grounding may also render any RFI filter and isolation transformer ineffective."

SAFTRONICS

When experiencing RFI problems with AC inverter drives, Saftronics has stated that the first step is to verify the existence of a proper grounding system. All too often, old commercial or residential construction relied on "indirect" grounding methods in which the building ground was accomplished via steel water pipes or conduit instead of through solid, properly sized conductors. This poor practice increases the likelihood that common mode noise will be propagated throughout the facility.

Conclusion

The phenomenon of AC static drive noise generation can adversely effect many devices including the controller itself. Nonetheless, AC static drives offer technology that, in numerous circumstances, can provide more benefits than alternative drives. Awareness of the circumstances that allow AC static drives to interfere with other devices and proper design considerations will greatly reduce the effects of these phenomenon.

While this publication addresses AC inverter drives, it is desirable to continually explore issues relating to emerging AC drive technology.

MCE's Technical Publication series is intended to be an informative catalyst for ongoing dialogue and sharing of information between consultants, elevator contractors, owners and other interested parties. MCE Technical Publications are available on our website at www.mceinc.com.

Don Alley, Chief Engineer
MCE R&D Staff
January 1996

Elevator Modernization Performance Charts

Elevator Performance Data for Representative Buildings Before and After Modernization with MCE's M3 Group System Elevator Dispatching

Purpose

This Technical Publication illustrates the dramatic elevator performance improvement realized using MCE's M3 Group System. Each page summarizes actual project data.

Overview

These studies document system performance improvement by comparing average waiting time, before and after modernization, for a variety of projects.

Impressive reductions in hall call waiting time have been documented *up to 83%*.

While every building is different, the following collection of individual site studies is useful as a generalized predictive model for successful elevator system improvement — as measured by reduced average waiting time — applicable to similar buildings.

The actual performance improvement resulting from a particular scope of work is obviously based on many factors including: the type of building occupancy, current population and rate of growth, the efficiency and condition of existing elevator control and dispatching equipment, and the extent of modernization undertaken.

Chase Manhattan Bank

Worldwide Headquarters — Low Rise

Manhattan, New York USA

75%
Reduction in Hall Call Wait Time

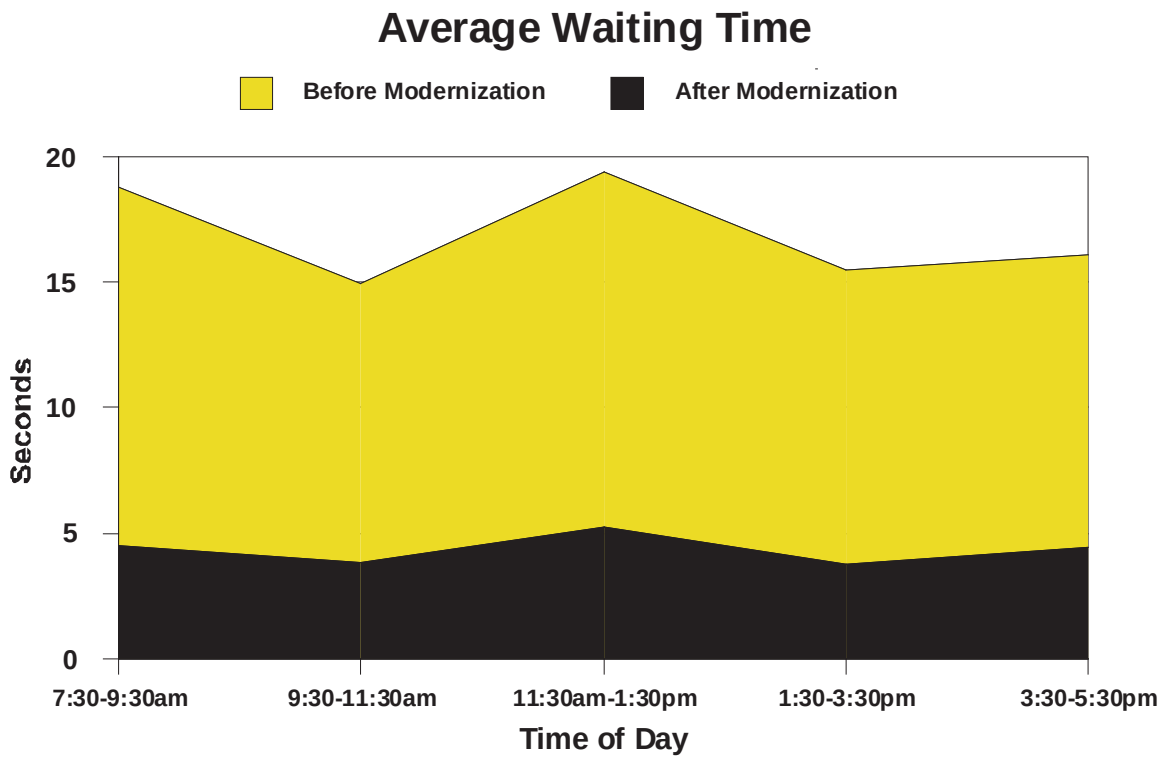

Equipment

Existing:
Otis gearless

Modernized with:
MCE IMC-SCR 12-pulse controls
MCE M3 Group Dispatcher

Traffic Study Detail

Pre-Modernization:
7/25/94 — Delta Traffic Analysis System

Post-Modernization:
1/27/97 — MCE CMS Traffic Analysis Reporting

Project Profile

Cars:	**8**
Floors:	**11**
Stops:	**10**
Speed:	**500 fpm**
Capacity:	**3,500 lbs**
Type:	**office building single tenant**

Statistics

	BEFORE	AFTER
Calls	3,712	4,443
Population	3,200	5,000+

Rev 5/26/98

Chase Manhattan Bank

Worldwide Headquarters — High Rise

Manhattan, New York USA

70%
Reduction in Hall Call Wait Time

Average Waiting Time

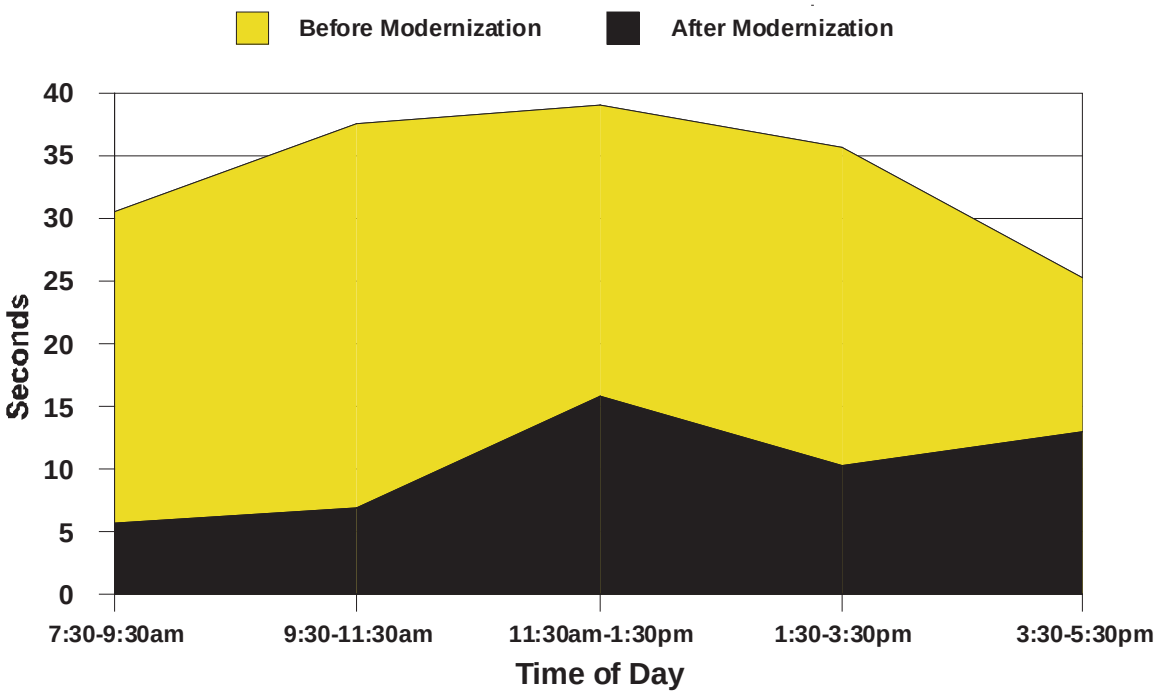

Equipment

Existing:
Otis gearless

Modernized with:
MCE IMC-SCR 12-pulse controls
MCE M3 Group Dispatcher

Traffic Study Detail

Pre-Modernization:
7/25/94 — Delta Traffic Analysis System

Post-Modernization:
1/27/97 — MCE CMS Traffic Analysis Reporting

Project Profile

Cars:	**8**
Floors:	**52**
Stops:	**21**
Speed:	**1,200 fpm**
Capacity:	**3,500 lbs**
Type:	**office building single tenant**

Statistics

	BEFORE	AFTER
Calls	3,130	2,496
Population	3,200	5,000+

Rev 5/26/98

CNN Center - North Tower

One CNN Center

Atlanta, Georgia USA

65%
Reduction in Hall Call Wait Time

Average Waiting Time

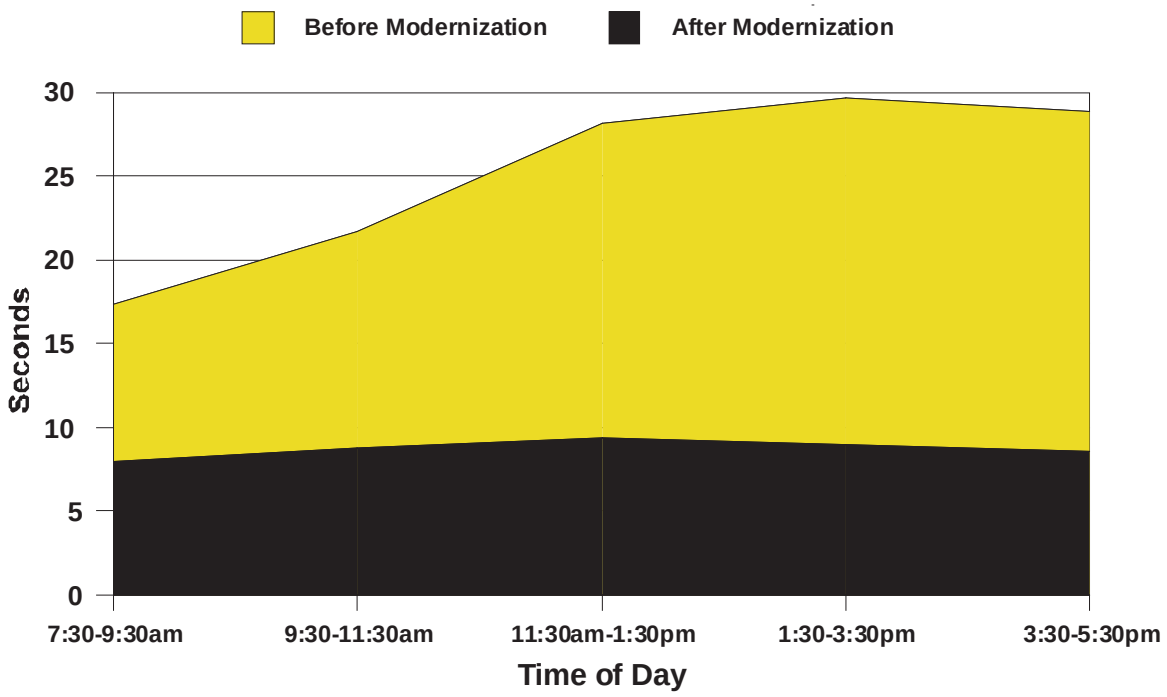

Equipment

Existing:
Westinghouse gearless

Modernized with:
MCE IMC-SCR 12-Pulse Controls
MCE M3 Group Dispatcher

Traffic Study Detail

Pre-Modernization:
6/29/95 — EPTi Traffic Analysis System

Post-Modernization:
4/9/96 — MCE Traffic Analysis Reporting

Project Profile

Cars:	**4**
Floors:	**12**
Stops:	**12**
Speed:	**500 fpm**
Capacity:	**3,000 lbs**
Type:	**office building multiple tenant**

Statistics

	BEFORE	AFTER
Calls	2,413	3,258

Rev 9/10/98

Dupont Plaza
Office Building
Miami, FL USA

59%
Reduction in Hall Call Wait Time

Average Waiting Time

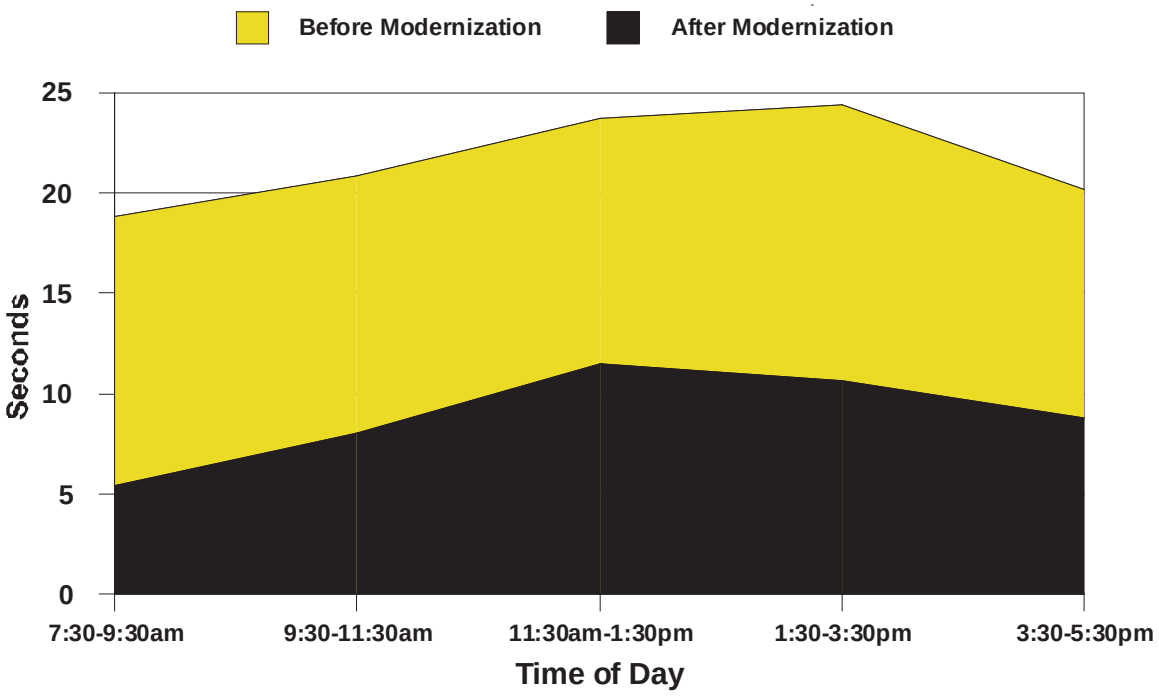

Equipment
Existing:
Otis gearless
Modernized with:
MCE IOS Intelligent Overlay System
MCE M3 Group Dispatcher

Traffic Study Detail
Pre-Modernization:
11/18/91 — Digimetrix Traffic Analysis System
Post-Modernization:
8/5/92 — MCE CMS Traffic Analysis Reporting

Project Profile

Cars:	**3**
Floors:	**12**
Stops:	**12**
Speed:	**700 fpm**
Type:	**office building multiple tenant**

Statistics

	BEFORE	AFTER
Calls	1,712	1,739

Rev 5/26/98

Holiday Inn
750 Kearny Street
San Fransisco, CA USA

68%
Reduction in Hall Call Wait Time

Average Waiting Time

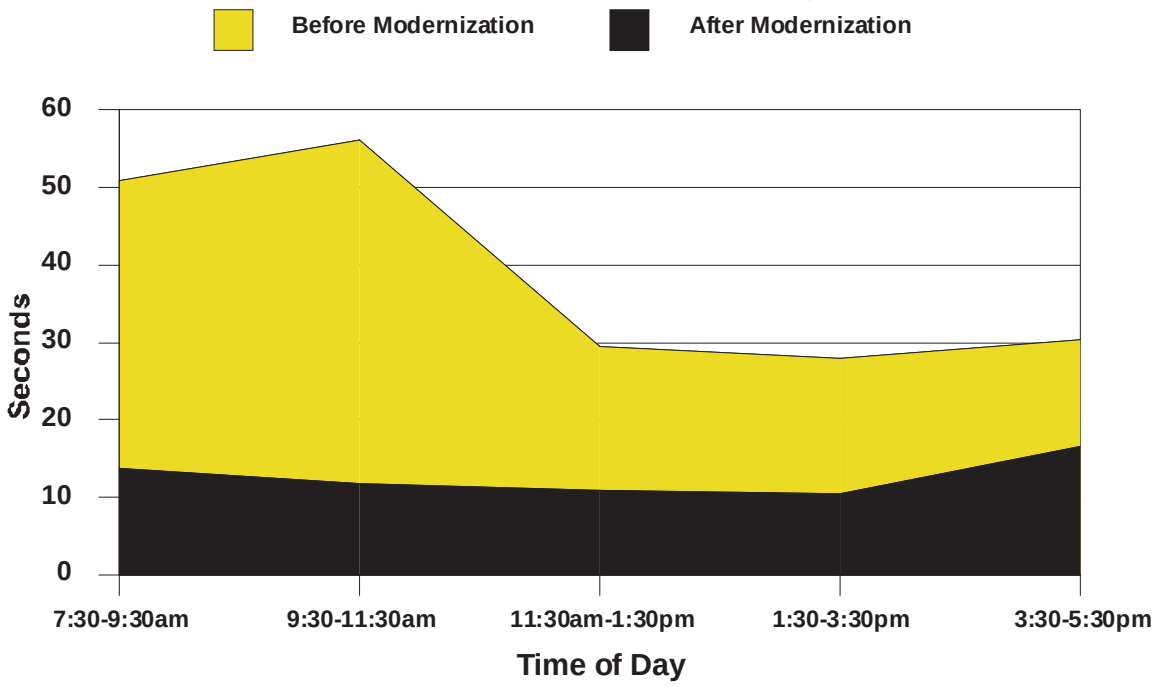

Equipment
Existing:
Otis gearless
Modernized with:
MCE IMC-SCR 12-pulse controls
MCE M3 Group Dispatcher

Traffic Study Detail
Pre-Modernization:
10/29/96 — Digimetrix Traffic Analysis System
Post-Modernization:
5/4/98 — MCE CMS Traffic Analysis Reporting

Project Profile

Cars:	**4**
Floors:	**31**
Stops:	**31**
Speed:	**700 fpm**
Capacity:	**2,500**
Type:	**hotel**

Statistics

	BEFORE	AFTER
Calls	3,925	3,590

Rev 5/26/98

Office Building 9

744 P Street — Low Rise

Sacramento, California USA

54%
Reduction in Hall Call Wait Time

Average Waiting Time

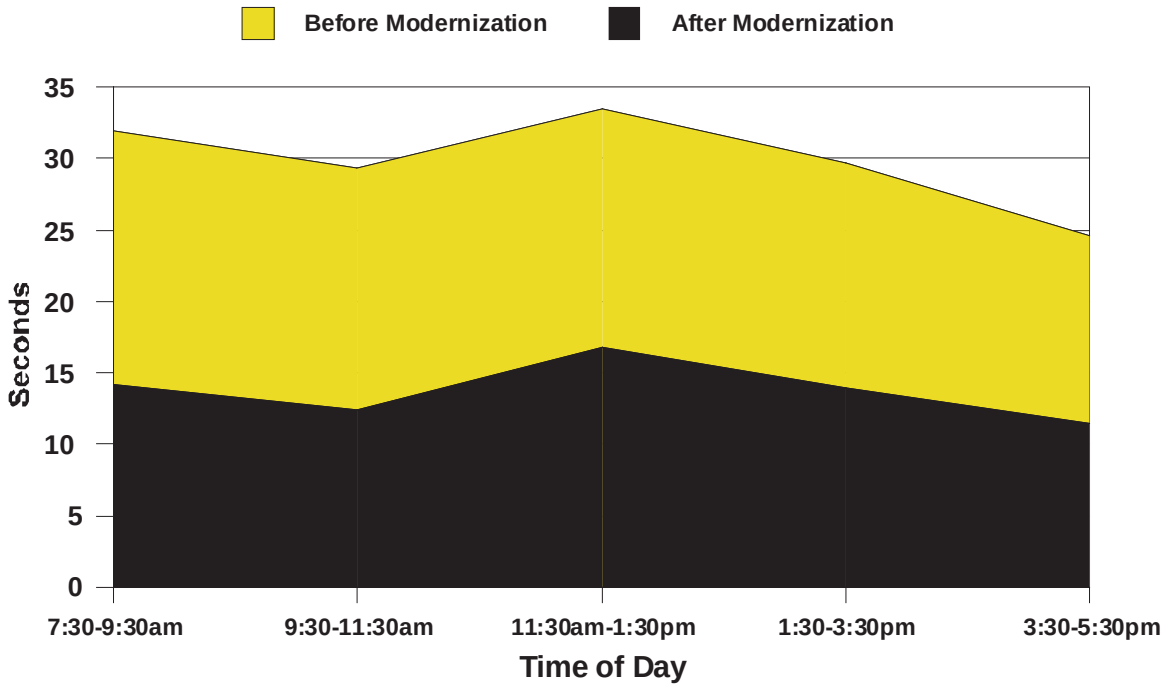

Equipment

Existing:
Otis gearless

Modernized with:
MCE IMC-MG Controls
MCE M3 Group Dispatcher

Traffic Study Detail

Pre-Modernization:
5/8/97 — EPTi Traffic Analysis System

Post-Modernization:
9/11/98 — MCE Traffic Analysis Reporting

Project Profile

Cars:	**3**
Floors:	**11**
Stops:	**11**
Speed:	**500 fpm**
Capacity:	**3,500 lbs**
Type:	**office building multiple tenant**

Statistics

	BEFORE	AFTER
Calls	1,852	1,995

Rev 9/17/98

Office Building 9

744 P Street — High Rise

Sacramento, California USA

78%
Reduction in Hall Call Wait Time

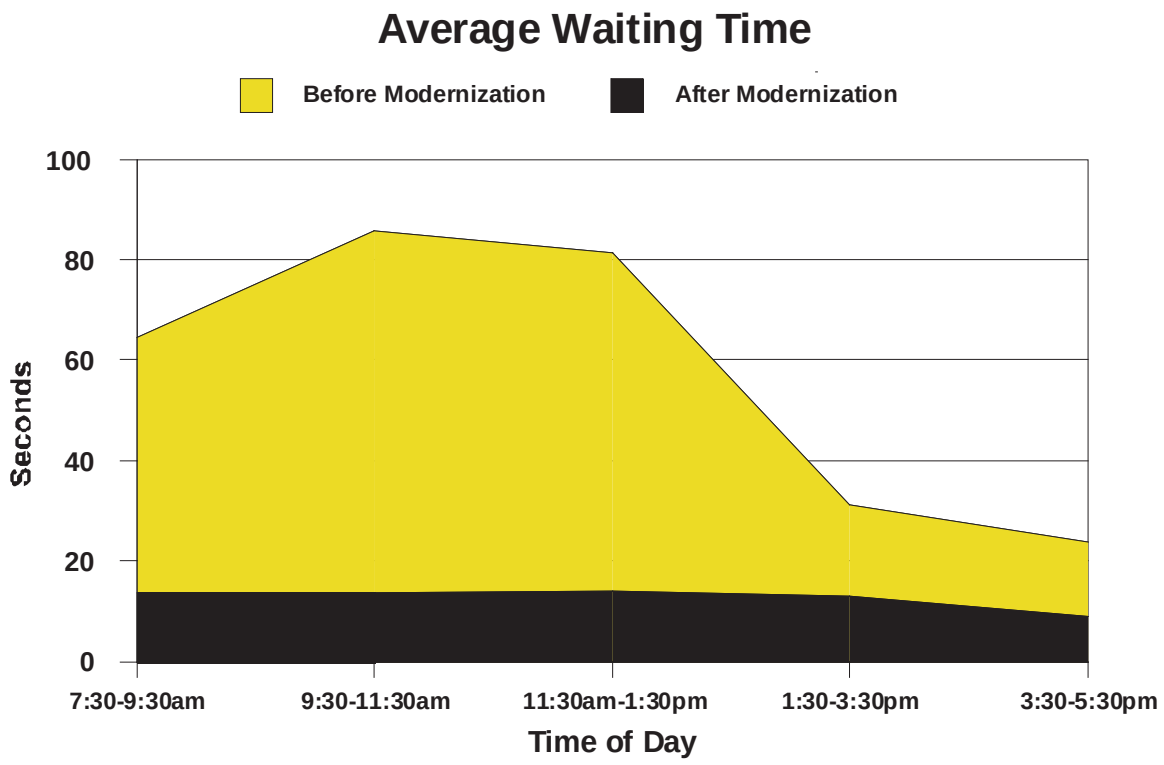

Equipment

Existing:
Otis gearless

Modernized with:
MCE IMC-MG Controls
MCE M3 Group Dispatcher

Traffic Study Detail

Pre-Modernization:
5/20/97 — EPTi Traffic Analysis System

Post-Modernization:
9/4/98 — MCE Traffic Analysis Reporting

Project Profile

Cars:	**3**
Floors:	**18**
Stops:	**11**
Speed:	**1,000 fpm**
Capacity:	**3,500 lbs**
Type:	**office building multiple tenant**

Statistics

	BEFORE	AFTER
Calls	1,607	1,792

Rev 9/10/98

Rutledge Building
Senate Street
Columbia, South Carolina, USA

83%
Reduction in Hall Call Wait Time

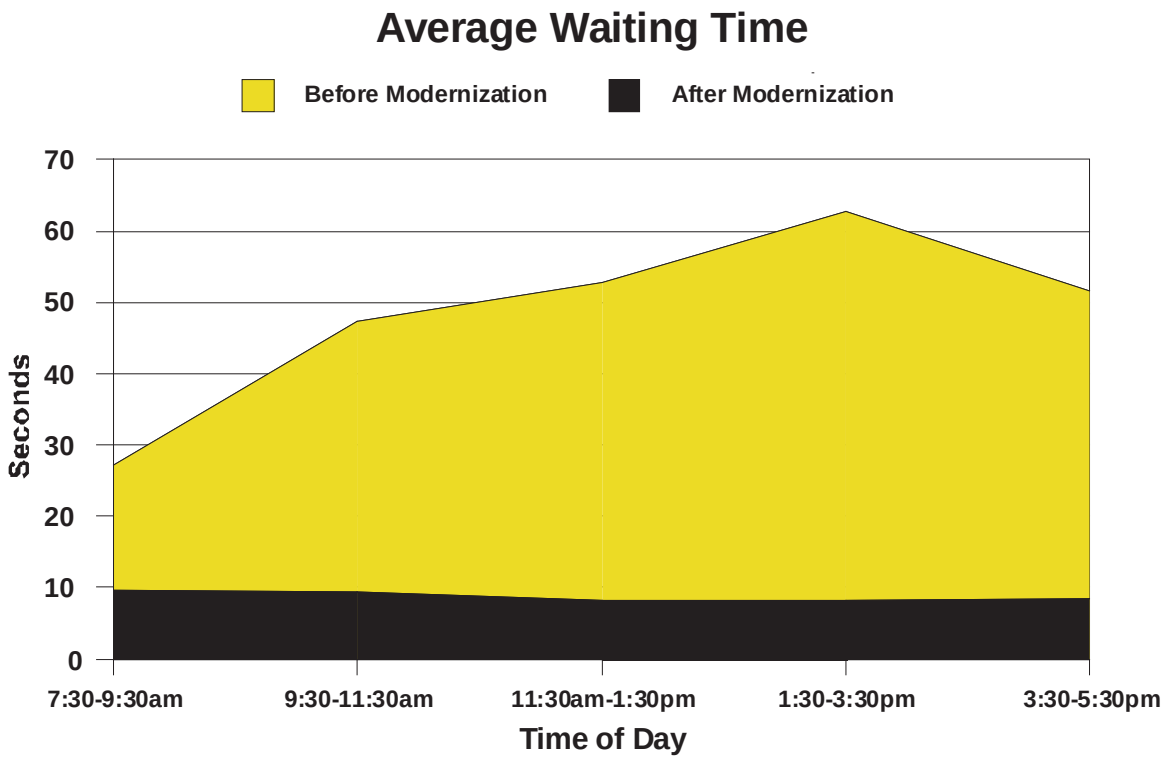

Equipment
Existing:
Otis gearless
Modernized with:
MCE IMC-SCR 12-Pulse Controls
MCE M3 Group Dispatcher

Traffic Study Detail
Pre-Modernization:
5/10/95 — EPTi Traffic Analysis Reporting
Post-Modernization:
9/24/98 — MCE CMS Traffic Analysis Reporting

Project Profile

Cars:	**4**
Floors:	**13**
Stops:	**13**
Speed:	**500 fpm**
Capacity:	**3,000 lbs**
Type:	**office building single tenant**

Statistics

	BEFORE	AFTER
Calls	1,900	2,536
Population	600	600

Rev 11/05/98

University of Minnesota
Moos Tower
Minneapolis, MN USA

70%
Reduction in Hall Call Wait Time

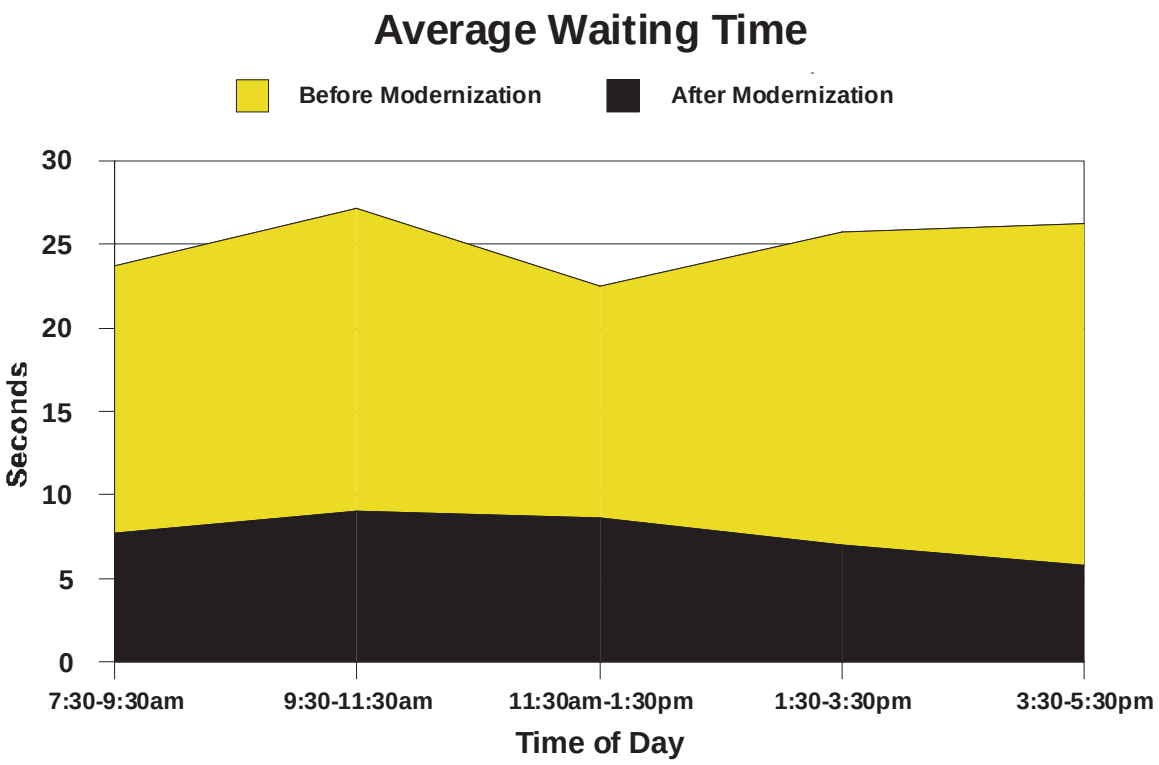

Equipment
Existing:
Westinghouse gearless
Modernized with:
MCE IMC-SCR 12-pulse controls
MCE M3 Group Dispatcher

Traffic Study Detail
Pre-Modernization:
3/19/96 — Digimetrix Traffic Analysis System
Post-Modernization:
3/18/97 — Digimetrix Traffic Analysis System

Project Profile
Cars:	**6**
Floors:	**19**
Stops:	**18**
Speed:	**700 fpm**
Capacity:	**4,000 lbs**
Type:	**medical school**

Statistics
	BEFORE	AFTER
Calls	2,203	3,422

Rev 5/26/98