Motion Control Engineering, Inc.
11380 White Rock Road
Rancho Cordova, CA 95742

voice 916 463 9200
fax 916 463 9201
www.mceinc.com

Manual,
TAPS Traction Auxiliary Power Supply

Manual # 42-02-U001, Rev C1 January 2019

Copyright

Copyright 2019, Motion Control Engineering. All Rights Reserved.
This document may not be reproduced, electronically or mechanically, in whole or in part, without written permission from Motion Control Engineering.

Trademarks

All trademarks or registered product names appearing in this document are the exclusive property of the respective owners.

Warning and Disclaimer

Although every effort has been made to make this document as complete and accurate as possible, Motion Control Engineering and the document authors, publishers, distributors, and representatives have neither liability nor responsibility for any loss or damage arising from information contained in this document or from informational errors or omissions. Information contained in this document shall not be deemed to constitute a commitment to provide service, equipment, or software by Motion Control Engineering or the document authors, publishers, distributors, or representatives.

Limited Warranty

Motion Control Engineering (manufacturer) warrants its products for a period of 15 months from the date of shipment from its factory to be free from defects in workmanship and materials. Any defect appearing more than 15 months from the date of shipment from the factory shall be deemed to be due to ordinary wear and tear. Manufacturer, however, assumes no risk or liability for results of the use of the products purchased from it, including, but without limiting the generality of the forgoing: (1) The use in combination with any electrical or electronic components, circuits, systems, assemblies or any other material or equipment (2) Unsuitability of this product for use in any circuit, assembly or environment. Purchasers' rights under this warranty shall consist solely of requiring the manufacturer to repair, or in manufacturer's sole discretion, replace free of charge, F.O.B. factory, any defective items received at said factory within the said 15 months and determined by manufacturer to be defective. The giving of or failure to give any advice or recommendation by manufacturer shall not constitute any warranty by or impose any liability upon the manufacturer. This warranty constitutes the sole and exclusive remedy of the purchaser and the exclusive liability of the manufacturer, AND IN LIEU OF ANY AND ALL OTHER WARRANTIES, EXPRESSED, IMPLIED, OR STATUTORY AS TO MERCHANTABILITY, FITNESS, FOR PURPOSE SOLD, DESCRIPTION, QUALITY PRODUCTIVENESS OR ANY OTHER MATTER. In no event will the manufacturer be liable for special or consequential damages or for delay in performance of this warranty.

Products that are not manufactured by MCE (such as drives, CRT's, modems, printers, etc.) are not covered under the above warranty terms. MCE, however, extends the same warranty terms that the original manufacturer of such equipment provide with their product (refer to the warranty terms for such products in their respective manual).

Important Precautions and Useful Information

This preface contains information that will help you understand and safely maintain MCE equipment. We strongly recommend you review this preface and read this manual before installing, adjusting, or maintaining Motion Control Engineering equipment. This preface discusses:

- Safety and Other Symbol Meanings
- Environmental Considerations
- In This Guide

Safety and Other Symbol Meanings

Danger

This manual symbol is used to alert you to procedures, instructions, or situations which, if not done properly, might result in personal injury or substantial equipment damage.

Caution

This manual symbol is used to alert you to procedures, instructions, or situations which, if not done properly, might result in equipment damage.

This manual symbol is used to alert you to instructions or other immediately helpful information.

Environmental Considerations

- Keep ambient temperature between 32 and 104 degrees F (0 to 40 degrees C).
- Prevent condensation on the equipment.
- Make certain that power line fluctuations are within plus or minus 5% of proper value.

In This Guide:

This guide is the installation, adjustment, and troubleshooting guide for the TAPS Traction Auxiliary Power Supply. When viewed online as a pdf file, hyperlinks link to related topics and informational websites. The manual includes:

- Contents: Table of Contents. When viewed online as a pdf file, hyperlinks in the Contents link to the associated topic in the body of the manual.
- *TAPS*: Product Description, installation, and troubleshooting instructions.

Contents

Traction Auxiliary Power Supply 1

TAPS Description 2
- Operating Controls 3
- Specifications 4

Installation 6
- Choosing a Location 6
  - 6kVA UPS Enclosure Assembly 8
- Power Connections and Transformer Configuration 11
  - Before Beginning 11
  - Control Wires BS1 and BS2. 12
  - Transformer Configuration: 3 kVA Units ONLY 12
- TAPS to Controller Signal Connections 14
- Output Signals 14
  - TAPS Connection Tables for MCE Controllers. 15
- Input Signals 16
- Installing the UPS 18
  - Power and I/O Connections 18

Startup 21
- UPS Output Adjust for TAPS 6kVA Units Only 22
  - Check Setting 22
  - 6kVA UPS Output Setting. 22
- Set Parameters 23
- Final Adjustment 26
  - Balanced load 26
  - Unbalanced/no load 26
- Functional Test 27

Place TAPS in Service 28
- Periodic Maintenance 28

Troubleshooting 29
- TAPS Operation Review 29
- Utility Power Normal; UPS on Battery Mode 30
- UPS Fault LED lights; No Output 30
- TAPS Does Not Engage when Commercial AC Fails 31
- Utility Power Normal; No Feed-Through Operation 31
- Circuit Board Troubleshooting 31
- UPS Troubleshooting 31

Reference 32
- UPS Unit Information 33
  - 3kVA Units 33
  - 6kVA Units 34

TAPS Drawings 35

Safety and Other Symbol Meanings iii
Environmental Considerations iii
In This Guide: iii
Traction Auxiliary Power Supply 1
TAPS Description 2
Operating Controls 3
Specifications 4
Installation 6
Choosing a Location 6
6kVA UPS Enclosure Assembly 8
Power Connections and Transformer Configuration 11
Before Beginning 11
Control Wires BS1 and BS2. 12
Transformer Configuration: 3 kVA Units ONLY 12
TAPS to Controller Signal Connections 14
Output Signals 14
TAPS Connection Tables for MCE Controllers. 15
Input Signals 16
Installing the UPS 18
Power and I/O Connections 18
Startup 21
UPS Output Adjust for TAPS 6kVA Units Only 22
Check Setting 22
6kVA UPS Output Setting. 22
Set Parameters 23
Final Adjustment 26
Balanced load 26
Unbalanced/no load 26
Functional Test 27
Place TAPS in Service 28
Periodic Maintenance 28
Troubleshooting 29
TAPS Operation Review 29
Utility Power Normal; UPS on Battery Mode 30
UPS Fault LED lights; No Output 30
TAPS Does Not Engage when Commercial AC Fails 31
Utility Power Normal; No Feed-Through Operation 31
Circuit Board Troubleshooting 31
UPS Troubleshooting 31
Reference 32
UPS Unit Information 33
3kVA Units 33
6kVA Units 34
TAPS Drawings 35

Traction Auxiliary Power Supply

The MCE Traction Auxiliary Power Supply, TAPS, monitors the commercial electrical power provided to an AC traction elevator controller. If commercial power fails, the auxiliary power supply provides single phase backup power, directs the controller to move the car safely to a landing, and provides power to open the elevator doors. If the elevator controller chooses a direction that draws power beyond a customer-preset level, the system will direct the controller to pause the car, then reverse direction to the nearest landing, again providing power to open the doors and allow passengers to exit. The TAPS unit will then disconnect power to the elevator controller after a customer defined time period or when an output from the controller tells it that the cycle is complete. When commercial power is restored, TAPS will direct commercial power to the elevator controller and automatically recharge the backup batteries for future use. Periodic maintenance and/or replacement of batteries is required depending upon frequency of use and environmental conditions, but is typically in the range of three to five years. The TAPs test switch allows you to easily test the unit periodically to see that it is functioning correctly.

Figure 1. MCE Traction Auxiliary Power Supply (3 kVA Unit Shown)

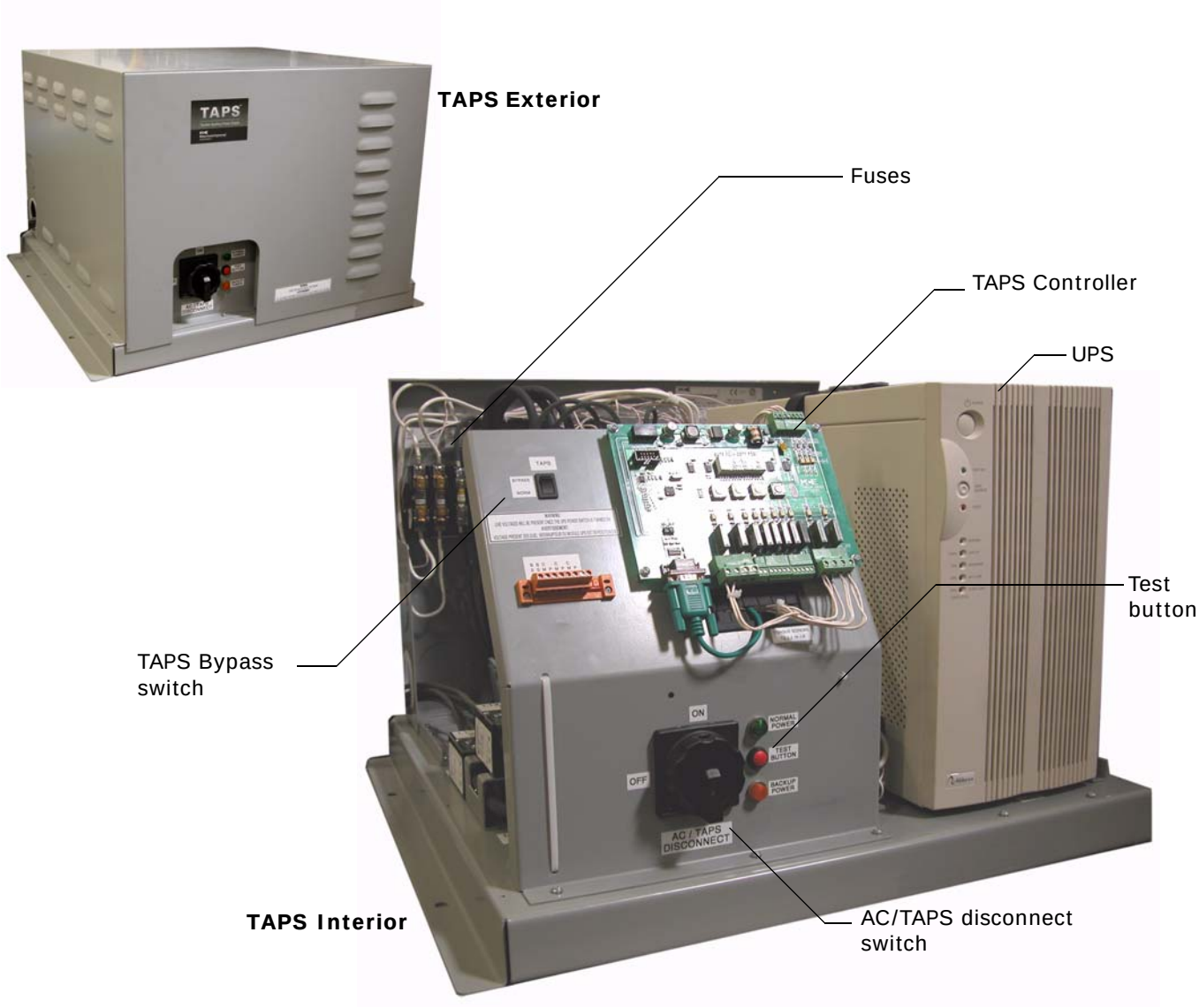

TAPS Description

The TAPS system utilizes three primary components:

- TAPS Controller: Programming interface for user parameter entry. Additionally, the UPS controller monitors commercial voltage, enables the UPS (Uninterruptible Power Supply) if required, and directs the elevator controller to move the car in the appropriate direction.
- UPS: The UPS builds and maintains a charge during normal, commercial power operation. When so directed by the TAPS controller, the UPS provides smooth power to the output transformer (60 Hz/120VAC for 3 kVA units: 60 Hz/220VAC for 6 kVA units). While commercial power is present, contactor KM0 passes 3-phase commercial power directly to the elevator controller while transformer T2 charges the UPS. If commercial power is lost (backup operation), the TAPS unit provides energy from the UPS to the elevator controller through contactor KM5. KM0 and KM5 are interlocked such that only one may be active at a time.
- Transformer: The input and output transformers are multi-tap units, configured by the installer to provide the appropriate output voltage to the elevator controller. (Not used on 6 kVA/240VAC units.)

Figure 2. Block Diagram

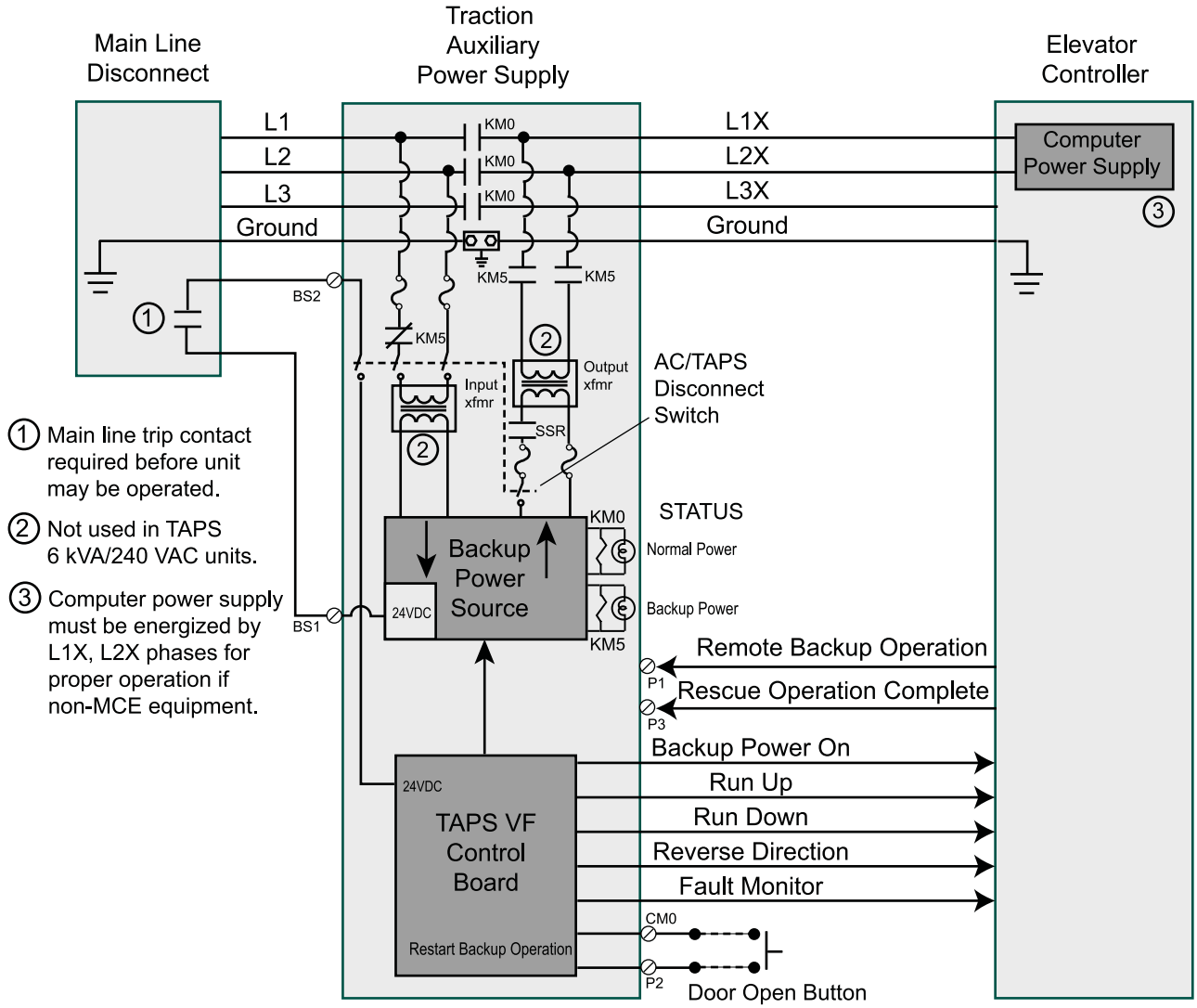

For 3kVA systems, the UPS is housed in the base TAPS enclosure. For 6kVA systems, the UPS is housed in a separate enclosure. 3 or 6kVA units are specified according to traction motor horsepower and overall system power consumption (for example, brake size, AC unit size, etc.).

Operating Controls

TAPS operating controls and indicators are visible through a cutout in the cover.

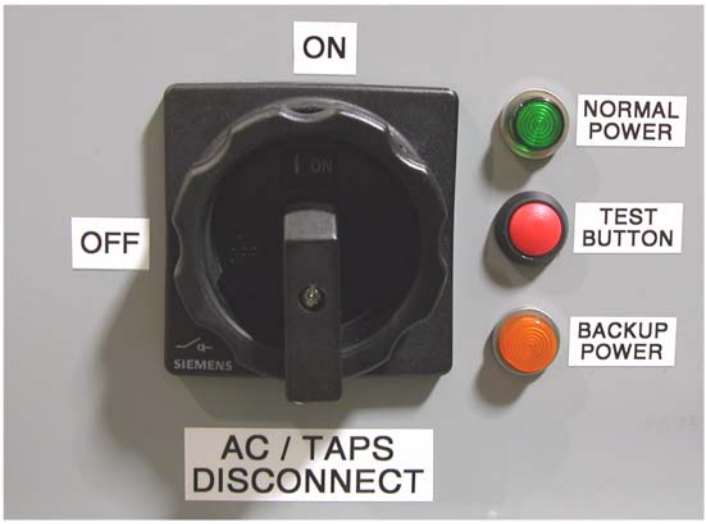

The BYPASS switch above is not visible unless the TAPS cover is removed

- **Normal Power:** The Normal Power indicator will light when commercial power is present and also indicates that KM0 contactor coil is energized. All power to the elevator controller will pass through the TAPS unit through contactor KM0. A small amount of power is drawn off to maintain the TAPS UPS batteries.
- **Backup Power:** Lights when commercial power has failed for the duration set by Parameter F1-9 (factory default is 2.0 seconds) and also indicates that the KM5 contactor coil is energized. Output power from the UPS will be present on power terminals L1X and L2X. Because this is a single phase output, terminal L3X will not be energized in this mode. Be certain that the elevator logic section is powered from lines L1X and L2X.

- **AC/TAPS DISCONNECT switch:** In the OFF position, this switch removes all power from the elevator system by opening up contactor KM0, even in the presence of commercial power. The switch also insures that contactor KM5 will not close in the event of commercial power loss. This switch possesses an integral lockout design with provisions for three different lockout tags/padlocks only while in the OFF position for code and safety compliance. In the OFF mode, power to the logic board is also disconnected. In the ON position, power will be provided through normal commercial power (AC mains) to the elevator controller via contactor KM0 or through contactor KM5 when in backup mode.
- **TAPS/BYPASS switch** (must remove top cover to access): In Bypass position, the TAPS backup power source is prevented from providing power to the TAPS outputs regardless of commercial power presence or absence. Feed through power from commercial AC remains connected to TAPS outputs. In Normal position, feed through power from AC mains is connected and, should commercial AC fail, the TAPS logic board will direct backup power to terminals L1X and L2X. There is an internally timed delay between Bypass selection and activation, typically two seconds.
- **Test button**: When the test button is pressed, TAPS will disconnect commercial power to the controller, provide power to complete a recall/rescue cycle, and finally detect commercial power presence and return the car to normal operation.

Note

You must press and hold the Test button until the time set by Parameter F1-9 elapses before the test will begin. (Factory default setting is 2.0 seconds.)

Specifications

Table 1. 3 kVA TAPS Unit Specifications

Specification	Normal Operation (Feed Through)	Backup Active
Input	480 VAC max, 3-phase, 60 Hz, 80 A	
Output	480 VAC max, 3-phase, 60 Hz, 80 A	480 VAC max, single phase, 60 Hz, 10.0 A max @ 208 VAC or 4.4 A max @ 480 VAC
Power	480 V, 3.0 A max., single phase, 60 Hz	3 kVA/2100 W
Mechanical	18” H x 24” W x 24” D	
SCCR	Short Circuit Current Rating:5000A / 480V	
This equipment is suitable for use on a circuit capable of delivering not more than 5,000 rms symmetrical amperes, 480 volts maximum.		

Table 2. 6 kVA 240 VAC TAPS Unit Specifications

Specification	Normal Operation (Feed Through)	Backup Active
Input	240 VAC max, 3-phase, 60 Hz, 150 A	
Output	240 VAC max, 3-phase, 60 Hz, 150 A	240 VAC max, single phase, 60 Hz, 20 A max @ 208 VAC
Power	240 V, 4.0 A max., single phase, 60 Hz	6 kVA/4200 W
Mechanical	Enclosure A: 18” H x 24” W x 24” D Enclosure B: 34” H x 21 3/8” W x 32 3/8” D	
SCCR	Short Circuit Current Rating:5000A / 480V	
This equipment is suitable for use on a circuit capable of delivering not more than 5,000 rms symmetrical amperes, 240 volts maximum.		

Table 3. 6 kVA 480 VAC TAPS Unit Specifications

Specification	Normal Operation (Feed Through)	Backup Active
Input	480 VAC max, 3-phase, 60 Hz, 80 A	
Output	480 VAC max, 3-phase, 60 Hz, 80 A	480 VAC max, single phase, 60 Hz, 8.75 A max @ 480 VAC
Power	480 V, 4.0 A max., single phase, 60 Hz	6 kVA/4200 W
Mechanical	Enclosure A: 18” H x 24” W x 24” D Enclosure B: 34” H x 21 3/8” W x 32 3/8” D	
SCCR	Short Circuit Current Rating:5000A / 480V	
This equipment is suitable for use on a circuit capable of delivering not more than 5,000 rms symmetrical amperes, 480 volts maximum.		

Installation

For protection during shipping, UPS units are shipped in separate containers from the TAPS chassis.

Installing and setting up the Traction Auxiliary Power Supply includes:

- Choosing a location
- Power connections and transformer configuration
- TAPS to controller signal connections
- Installing the UPS
- TAPS configuration

Choosing a Location

The TAPS chassis measures 18"H x 24"W x 24"D and is designed to be mounted to a floor or other horizontal surface using four 3/8” bolts. Please refer to “TAPS Chassis and Mounting Dimensions" below. For 6 kVA models, a second chassis is needed to house the UPS. This enclosure measures 34” H x 21 3/8” W x 32 3/8” D and also mounts using four 3/8” bolts. Please refer to “6 kVA UPS Chassis and Mounting Dimensions".

Figure 3. TAPS Chassis and Mounting Dimensions

Figure 4. 6 kVA UPS Chassis and Mounting Dimensions

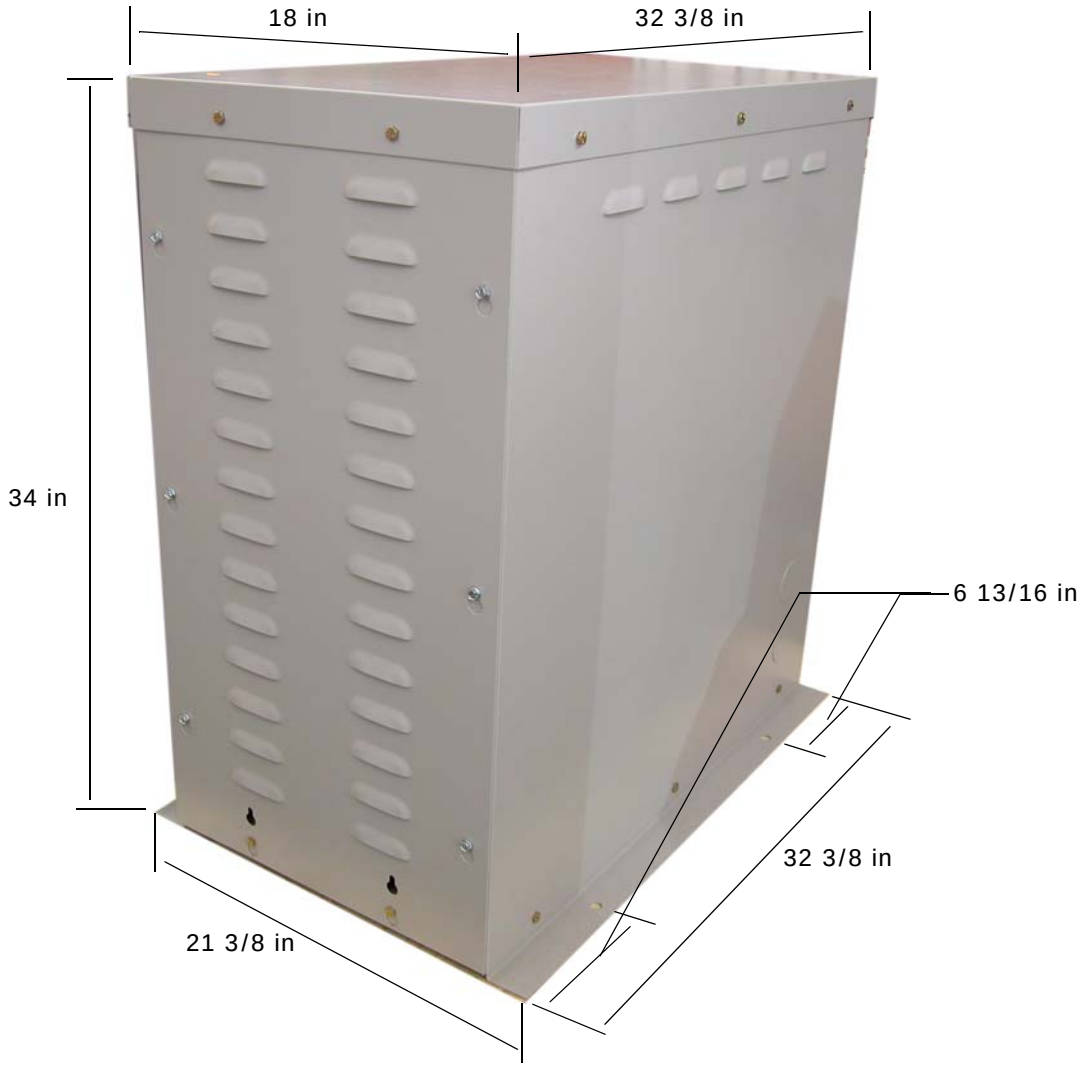

Electrically, the TAPS unit is installed between the main disconnect and the elevator controller. Choose the location that will allow the shortest power and signal wires. Depending on the site, there are approximately 5 to 20 control signal wires and 8 power wires. In general, when an isolation transformer is part of the control system, the TAPS unit is placed electrically between the transformer and the controller. When TAPS is used with an MCE controller, please refer to the specific job prints.

Power wires must be routed in separate conduit from signal wires to prevent the power wires from radiating noise into the signal wires. All applicable local, state, and other building codes must be followed.

Caution

Provide at least 1.0” ventilation space between cabinets and any wall or obstruction.

6kVA UPS Enclosure Assembly

The 6kVA UPS enclosure must be assembled on site. A drawing and a hardware list are shown below.

Table 4. TAPS 6kVA Enclosure Material List

Item	Part #	Qty	Description	Torque (inch-pounds)
1	15-10-0041	1	Enclosure base, NEMA1 32x21x1.5	NA
2	15-10-0042	1	Enclosure cover NEMA1 32.5x18.2	NA
3	15-10-0043	2	Enclosure F/B NEMA1 33x17.5	NA
4	15-10-0044	2	Enclosure R/L side NEMA1 33.5x32x2	NA
5	19-01-0913	16	Sheet metal screw #14x1/2 hex HD slotted	15
6	19-01-0040	16	Machine screw 1/4-20x1/2 #8 hard	75
7	40-25-0060	1	Bracket rail front CRS 11x2x3.13	NA
8	40-25-0061	2	Bracket rail side CRS 21x0.75x3.75	NA
9	40-25-0062	1	Bracket rail rear CRS 9x0.75x3.75	NA
10	19-01-0021	10	Machine screw Rd Hd slot 10-32x1/2	30
11	19-95-0017	10	Flat washer, steel, #10	NA
12	19-04-0012	10	Split washer #10	NA
13	37-01-0286	1	Lug, Gnd double barrel 1/4” stud #14	75
14	19-01-0041	1	Machine screw 1/4-20x3/4 #8 hard	75
15	19-04-0006	1	Flat washer 1/4	NA
16	19-04-0013	1	Washer, split 1/4	NA

Figure 5. 6kVA UPS Enclosure Base Assembly

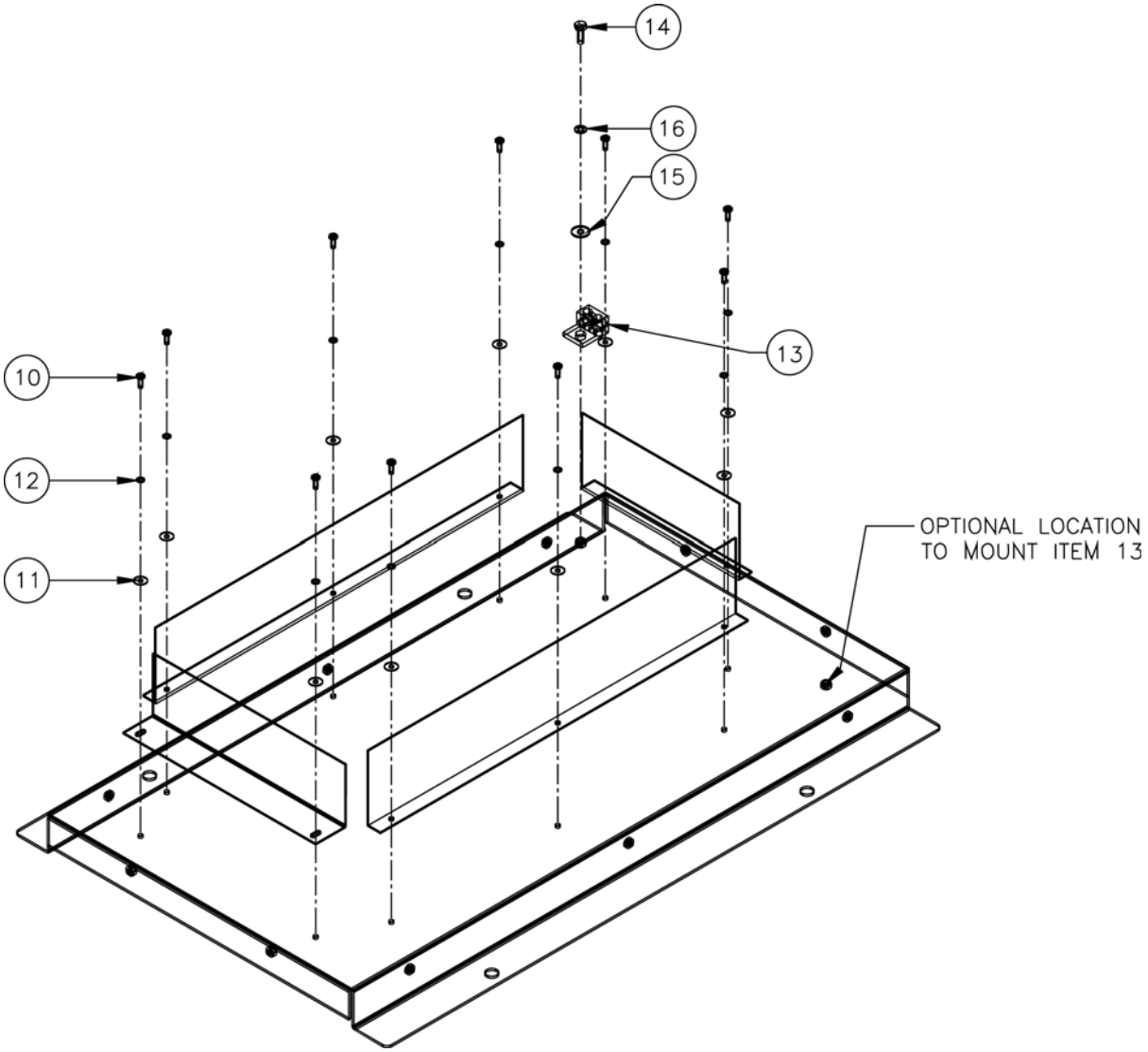

Figure 6. 6kVA UPS Enclosure Assembly

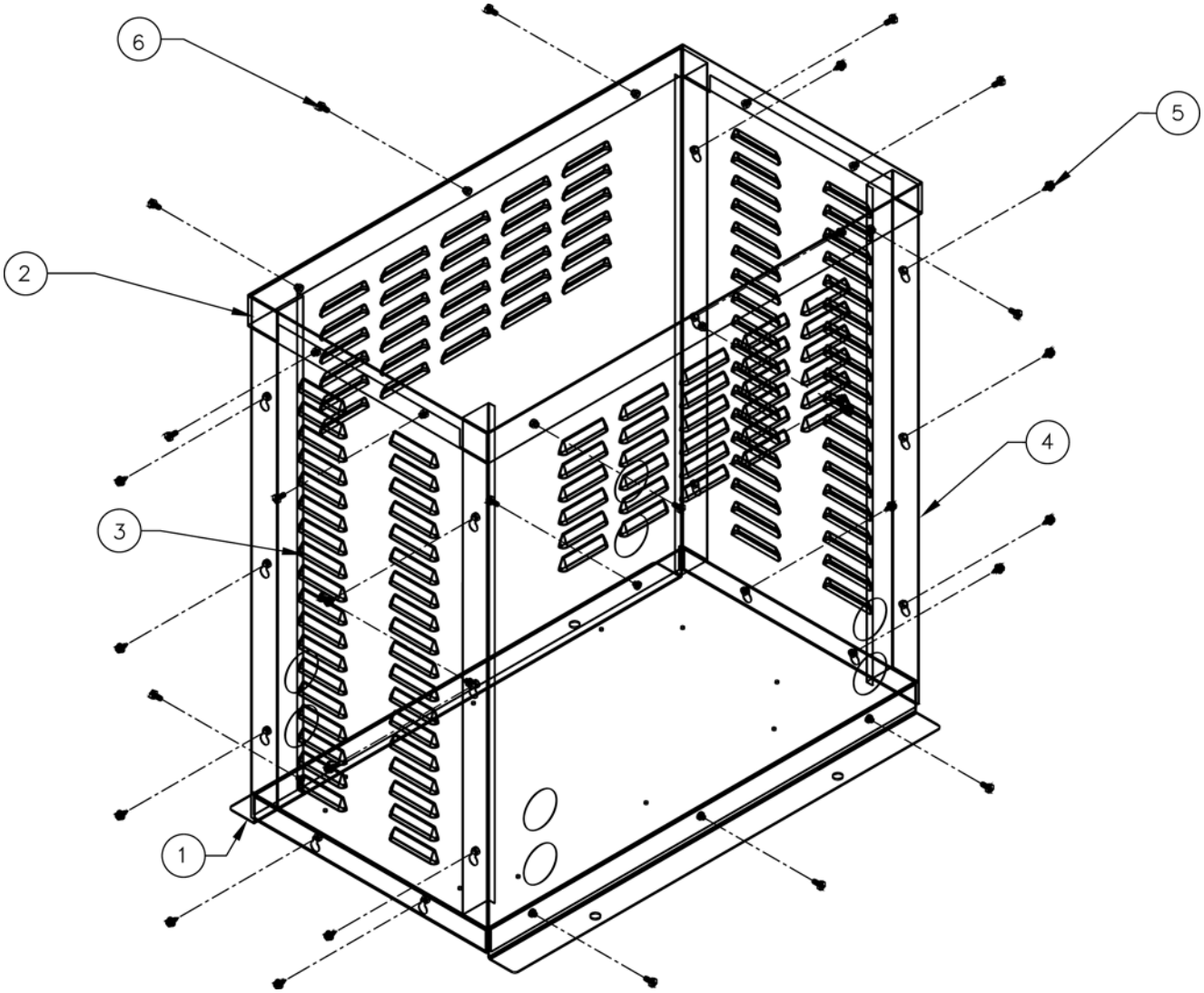

Power Connections and Transformer Configuration

TAPS 3 kVA model transformers are designed to accommodate different input and output needs (208, 220, 240, 416, 440, and 480 VAC). Before these units can be used, you must configure the input and output transformers to meet your voltage requirements.

TAPS 6 kVA-240 VAC and -480 VAC models do not require transformer configuration. Therefore, because no transformer configuration is possible, it is very important that the 6 kVA TAPS you received matches your line voltage. Refer to the silver label on the TAPS unit.

Note

The output voltage of the 6kVA UPS is configurable through UPS unit controls. The factory default setting for the UPS output is 220VAC. For most line voltages, this is optimal. However, if the line voltage feeding your elevator controller is 208 or 240VAC, the UPS output should be set accordingly. Please refer to “Startup” on page 21.

Before Beginning

Danger

High voltages may be present! Injury or death may result from contacting high voltages.

Installation and wiring must conform to applicable local and national codes. All work must be performed by qualified elevator contractors familiar with high voltage and rotating equipment safety precautions.

When making connections, observe torque ratings specified on the label adjacent to each terminal. Warranty will be void if connections are not torqued.

High current/high voltage connections must be run in a separate conduit from relay/control connections.

1. Disconnect (shut off) AC power at the main. Observe lockout requirements.
2. Set AC/TAPS Disconnect switch to OFF.

Note

The TAPS unit incorporates a lockable disconnect switch (lockable only in the OFF position). Observe lockout requirements.

3. Remove the TAPS enclosure cover.
4. Set the TAPS Bypass switch to the Bypass position.

Control Wires BS1 and BS2

1. A means is required to prevent the TAPS unit from delivering power to the elevator controller when AC power is deliberately shut off at the main disconnect. This is accomplished by disabling 24 VDC power to the TAPS-VF board by placing a switch or contact across terminals BS1 and BS2 on the front of the TAPS connector plate as shown below:

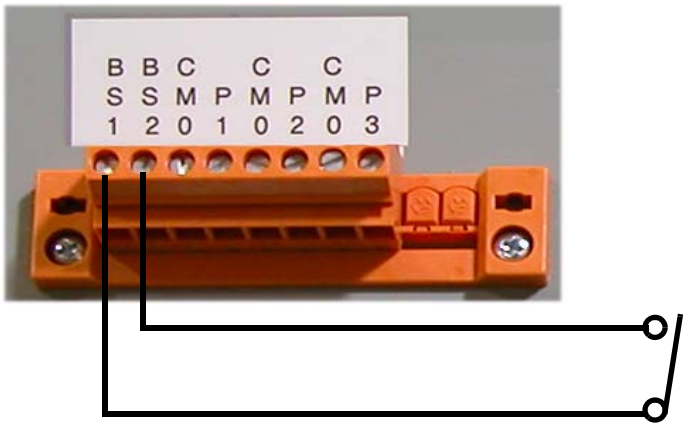

Auxiliary contact on the disconnecting means that is positively opened mechanically and whose opening is not solely dependent on springs. If shunt trip breaker is used, wire a contact in series with disconnect contact that will open if shunt trip breaker activates.

2. Wire the auxiliary contact of the main disconnect between BS1 and BS2 so that, when the main disconnect is opened, the connection between the two is likewise opened.

Transformer Configuration: 3 kVA Units ONLY

If you have a 6 kVA unit, skip this section. ONLY 3 kVA units require transformer configuration. Please refer to “Transformer Jumper Schedule, 3 kVA TAPS Units” on page 13.

Figure 7. 3 kVA TAPS Transformers

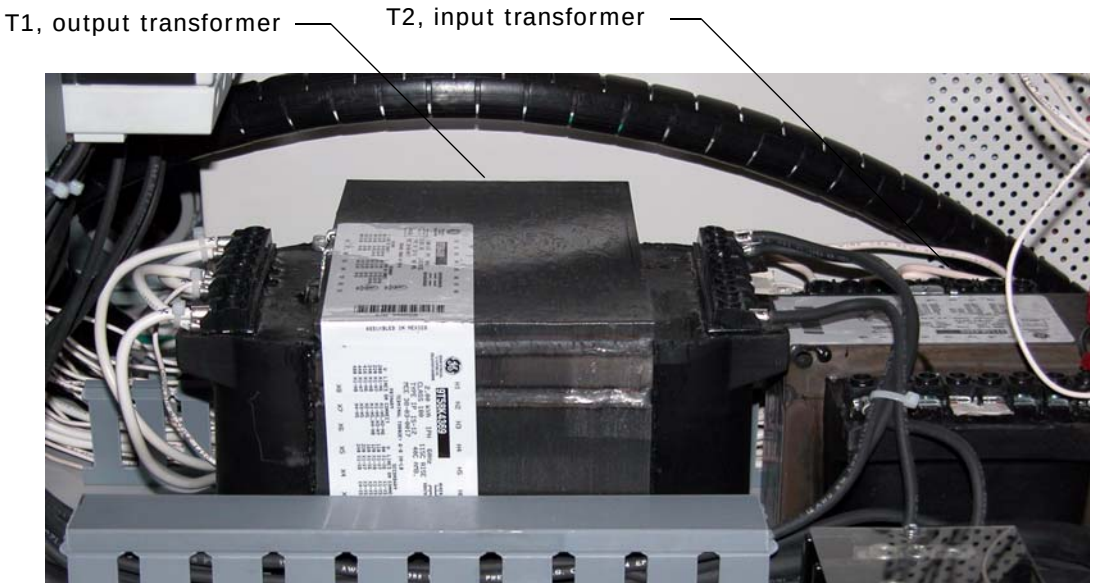

1. Check that factory wiring listed in the Connections On columns in the following table matches the voltages specific to your installation. If they do not match, move the connections to those specified for your voltage.
2. Connect the jumper wires (included in shipment) to transformers T1 and T2 according to the Jumpers column in the following table. Verify that the factory default line settings match your line voltage as indicated in the Connections column. Change if necessary.

Table 5. Transformer Jumper Schedule, 3 kVA TAPS Units

Line Voltage	Transformer T1		Transformer T2	
	Connections	**Jumpers**	**Connections**	**Jumpers**
208 VAC	H1, H6	H1 to H5 H2 to H6	H1, H6	H1 to H5 H2 to H6
220 VAC	H1, H7	H1 to H5 H3 to H7	H1, H7	H1 to H5 H3 to H7
240 VAC	H1, H8*	H1 to H5 H4 to H8	H1, H8*	H1 to H5 H4 to H8
416 VAC	H1, H6	H2 to H5	H1, H6	H2 to H5
440 VAC	H1, H7	H3 to H5	H1, H7	H3 to H5
480 VAC	H1, H8*	H4 to H5	H1, H8*	H4 to H5
* = Factory Default Setting				

Note

Jumpers used to configure the transformers are provided. They are in a plastic bag, usually taped to a transformer in the main TAPS enclosure.

TAPS to Controller Signal Connections

Figure 8. Relay Control Wiring Between TAPS and Elevator Controller

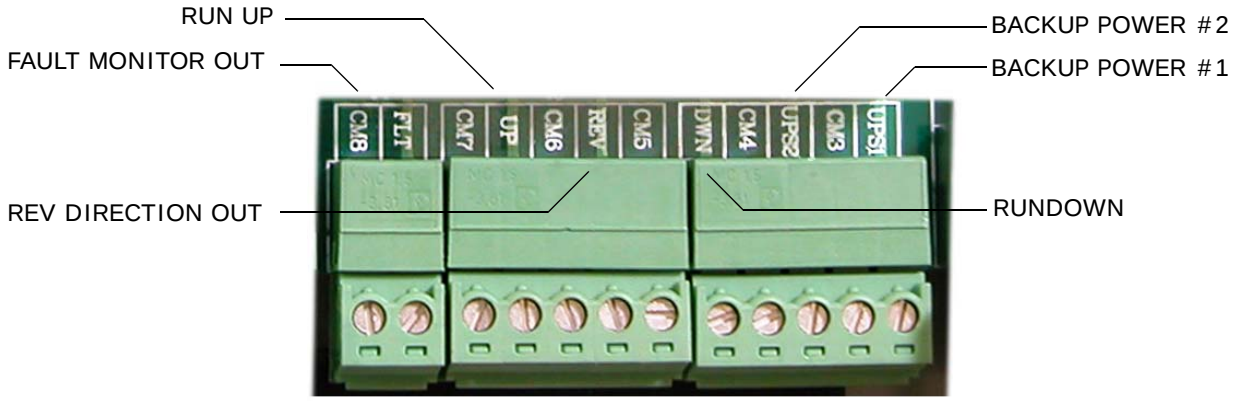

Output Signals

Note

Output Ratings: All outputs use single-pole relays with Normally Open (N.O.) contacts, each with its own common (dry contact) which can be used on non-ground referenced signals and have the following ratings: 3A maximum inductive load rating, 5A maximum resistive load rating, 125 VAC or 30 VDC maximum voltage.

- **BACKUP POWER ON #1 OUTPUT**: Terminals UPS1, CM3. This output contact will activate (close) when TAPS is in backup power mode. When this output activates, the control system must move the elevator to the next landing at approximately 10 fpm, and preferably with very low acceleration, deceleration, and jerk rates.
- **BACKUP POWER ON#2 OUTPUT**: Terminals UPS2, CM4. This output is identical to the BACKUP POWER ON #1 OUTPUT. This output is used with controllers that use the drive internal speed patterns. This contact should be wired to the drive to select a more relaxed profile, mainly with lower acceleration, deceleration, and jerk rates.

Note

The TAPS unit will attempt to provide the full current load demanded by the machine. In doing so, voltage may be reduced. If voltage falls below the undervoltage protection level set in your AC drive, an undervoltage condition will be reported. You may need to set the drive parameter for undervoltage detection to a lower value to prevent this.

- **REVERSE DIRECTION OUTPUT**: Terminals REV, CM6. This output contact will activate (close) when TAPS determines that the initial direction of travel is not the optimal direction because it will require excessive power. When the controller receives this signal, it must stop the elevator, then move in the opposite direction.
- **RUN UP OUTPUT**: Terminals UP, CM7. This output contact will activate (close) when TAPS determines that the controller must move in the up direction.

- **RUN DOWN OUTPUT**: Terminals DWN, CM5. This output contact will activate (close) when TAPS determines that the controller must move in the down direction.
- **FAULT MONITOR OUTPUT**: Terminals NF, CM8. TAPS constantly monitors the status of the UPS. This output contact will deactivate (open) when there is a problem with the UPS. This output can be used as part of the control monitoring system. Please refer to "Display Codes" on page 32.
  - E-01: The UPS has reported a failure. This error is displayed immediately.
  - E-03: Communication between UPS and TAPS has failed. This error is displayed after about 1 minute.

Note

Some elevator controllers will not require all TAPS outputs — some outputs may be unused for your application. Contact MCE Technical Support at 916 463 9200 if you have questions.

TAPS Connection Tables for MCE Controllers

The following tables provide TAPS relay closure output connection points for MCE elevator controls.

Table 6. TAPS Connections

TAPS Signal	TAPS Terminal	MCE Controller
Backup Power On	UPS1 CM3	BPCR input 2 Bus
Reverse Direction	REV CM6	REVD input 2 Bus
Fault Monitor	NF CM8	FLTM input 2 Bus

Note

For existing MCE controllers, a software upgrade will be required. Depending on the controller model, hardware modification may also be required. Please contact MCE with the type and software revision level of your controller.

Input Signals

REMOTE BACKUP OPERATION: Terminals CM0, P1. An optional input from the controller to initiate remote or periodic (e.g., once a month) testing of the TAPS systems. This is ideal for larger housing projects where some automation can reduce the workforce required to keep backup systems tested and operational. This input must come from an isolated "dry" relay contact from your elevator control system. This input operates identically to the built-in TEST BUTTON. Refer to Figure 9 for the location of these terminals.

Note

The REMOTE BACKUP OPERATION input must be active for the duration set by Parameter F1-9 (factory default is 2.0 seconds) before TAPS will enter test mode.

RESTART BACKUP POWER OPERATION: Terminals CM0, P2. Optional, isolated input. In the absence of commercial power, the RESTART BACKUP OPERATION input can be used to restart the TAPS unit after it has been shut down by Parameter F1-1. As an example of its intended usage, if a person did not initially leave the car after it was delivered to a landing and remained in the car until the doors closed and the TAPS unit powered down, pressing the Door Open Button would restart the TAPS unit and provide power to open the doors. A second example would be in the event of a TAPS failure during operation that caused the unit to shut down. Pressing the button would re-start the unit. Typically, the TAPS unit provides backup power for eight minutes (F1-1 factory default) from activation to shutdown. Pressing this button would restart that cycle.

Figure 9. Optional Door Open/Restart Button Input Connection

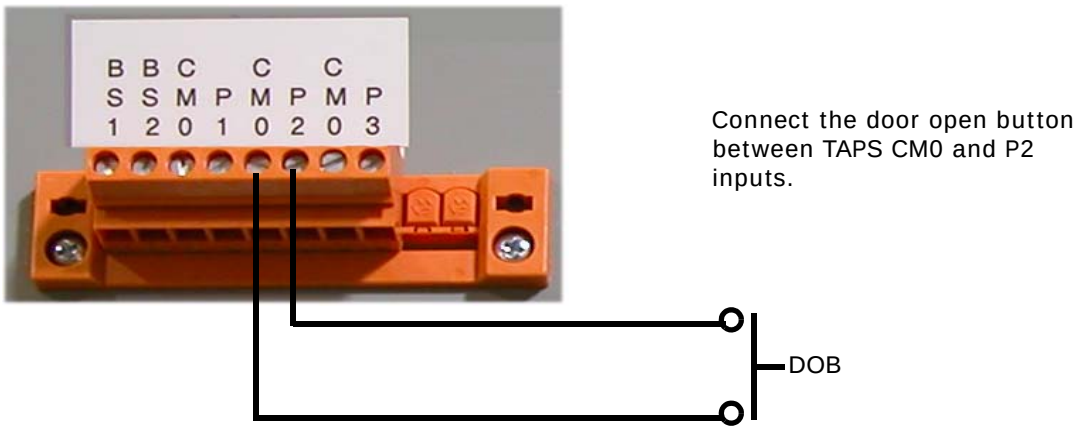

Note

Ensure that the button used for RESTART BACKUP POWER OPERATION is electrically isolated from other circuits to prevent potential damage to the TAPS control board.

RESCUE OPERATION COMPLETE INPUT: Terminals CM0, P3. An optional input is provided on the TAPS controller to signal that the rescue operation to a floor, and a door cycle, are complete. This is useful for two reasons:

- When a power outage occurs for a very short duration and the backup run timer, F1-1, is set to a relatively long time period (due perhaps to a long hatch or blind runs), this input will release the car from the F1-1 time period and put it back into normal commercial power operation.
- This input extends the useful running time of the backup system by shutting it down once the rescue operation is complete, reducing the energy used during backup and reducing the charge time required once commercial power is restored.

This input must come from an isolated “dry” relay contact from your elevator control system. Either short or long duration pulses are acceptable to activate the input. Refer to Figure 9 for the location of the terminals.

Installing the UPS

Installing the UPS in the base (3kVA) or expansion (6kVA) chassis includes:

- Power and I/O connections

Power and I/O Connections

Figure 10. 3kVA UPS Position on TAPS Baseplate

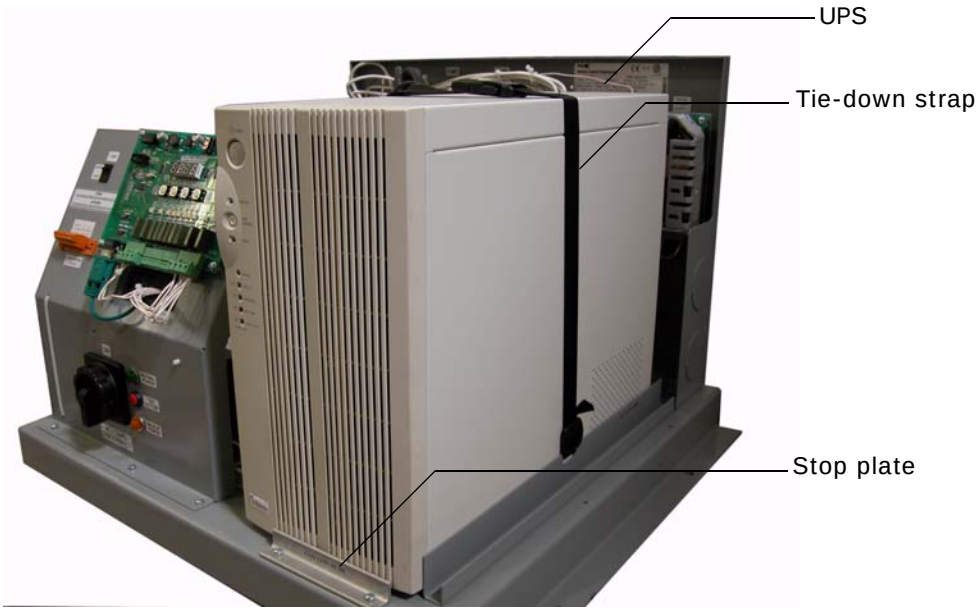

1. Check that the UPS on/off switch is in the OFF position. NO LEDs on the face of the UPS should be on.
2. Check that the AC/TAPS DISCONNECT switch is in the OFF position.
3. Remove the stop plate at the front of the chassis (see illustration above).
4. Position the 3kVA UPS on the TAPS baseplate as shown above and defined by rails on the baseplate. (Physically installing the 6kVA UPS in its separate enclosure is similar.)

Danger

High voltages may be present! Injury or death may result from contacting high voltages.

Installation and wiring must conform to applicable local and national codes. All work must be performed by qualified elevator contractors familiar with high voltage and rotating equipment safety precautions.

When making connections, observe torque ratings specified on the label adjacent to each terminal. Warranty will be void if connections are not torqued.

High current/high voltage connections must be run in a separate conduit from relay/control connections.

5. Make connections as shown in the illustration for your unit.
6. 3 and 6kVA units have voltage connection cover plates that must be installed.
   Note: The 9-pin serial cable is provided with the UPS unit.

Figure 11. 3 kVA Unit: UPS Power and I/O Connections

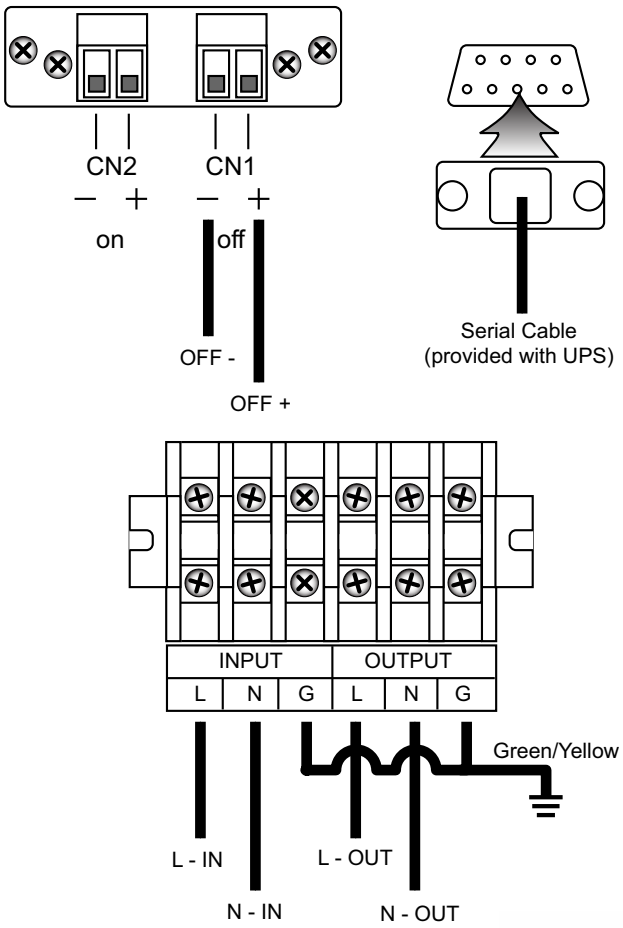

Typical 3kVA unit connections are shown to the right. Note that the voltage connection cover plates should be installed.

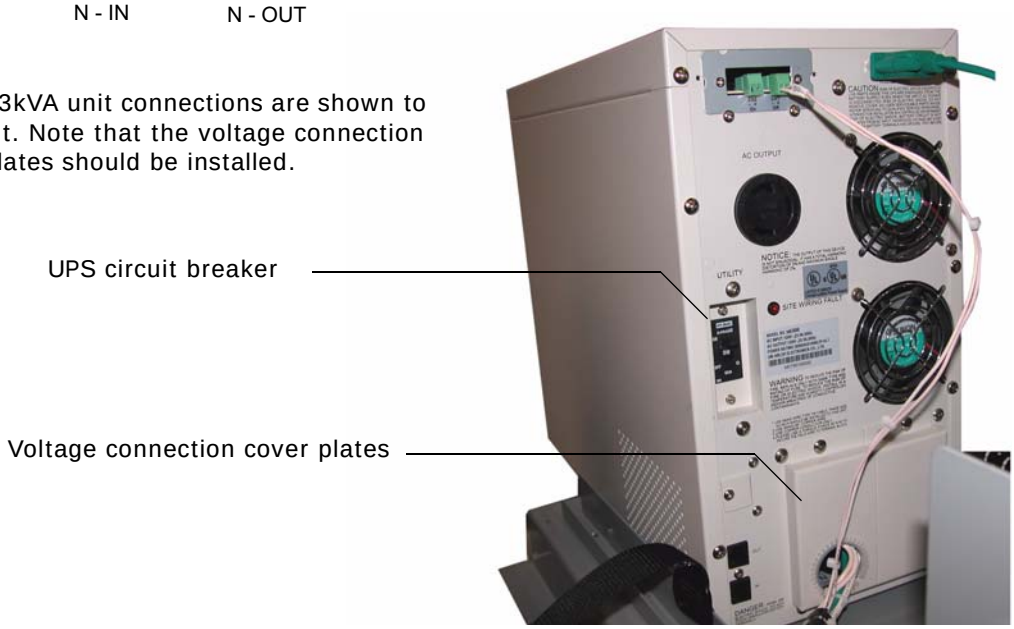

Figure 12. 6 kVA, 240/480VAC Unit: UPS Power and I/O Connections

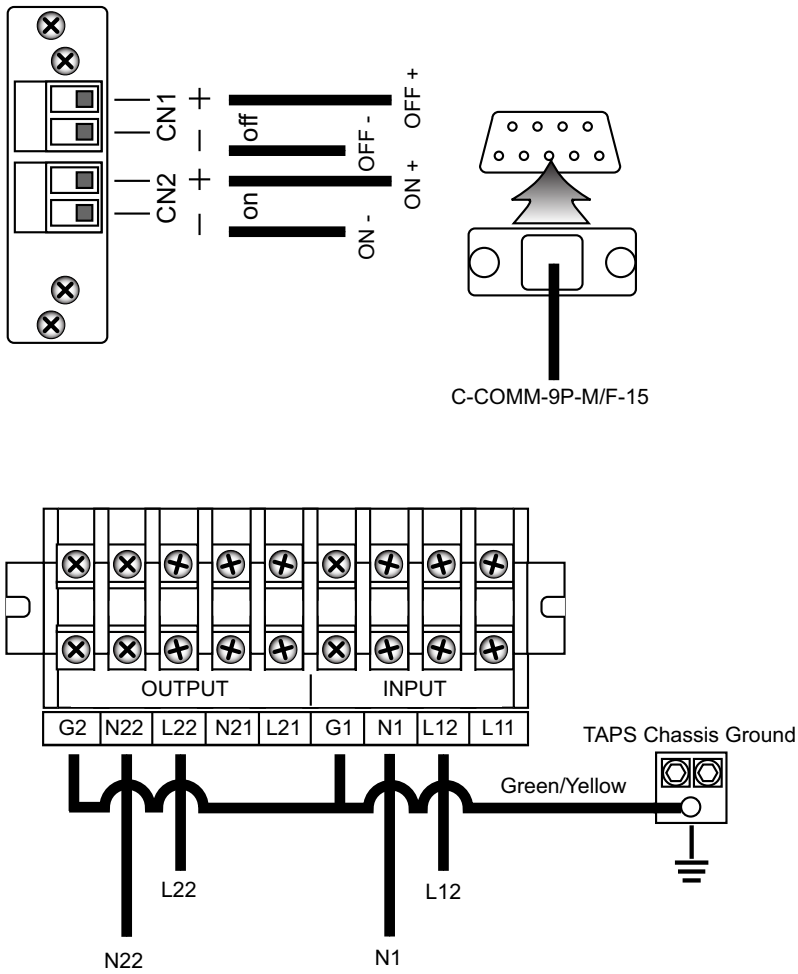

7. Once connections are made, slide the UPS back and install the stop plate you removed earlier.
8. Slide the UPS up to the stop plate, then use the tie-down to strap it into position securely.

Startup

1. Ensure that the AC/TAPS DISCONNECT switch is in the OFF position.
2. Check that all the connections (TAPS and UPS) have been properly made.
3. Position all necessary switches so that the elevator is in inspection mode during power up.
4. Make sure that the TAPS BYPASS switch is in the BYPASS position.
5. Turn on the main line disconnect.
6. Turn the AC/TAPS DISCONNECT switch to the ON position.
7. Set the utility breaker switch on the back of the UPS to the “ON” position.
8. Turn the UPS on.
   - For 3 kVA units, simply press the power button on the front. After a few seconds the UPS will begin the boot up sequence. Once boot up is complete, make sure the 100% utility and 75% inverter LEDs are on. (Both LEDs are on the front of the 3kVA UPS.) Note: If either the Fault, 50% Battery Low, or 25% Overload LEDs are on, see Troubleshooting on page 29.
   - For 6kVA units, press and hold the ON button for at least 3 seconds. After a few seconds the UPS will begin a self TEST, followed by an OK message, and then display:

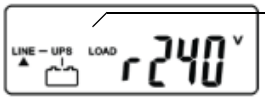

When the UPS has completing “booting”, the overbar displayed above LINE-UPS-LOAD will disappear.

Verify the UPS Utility and Bypass voltage LEDs are lighted. (If the Error LED lights, see Troubleshooting on page 29.)

9. Verify the TAPS NORMAL POWER indicator (green) is on (next to the AC/TAPS disconnect switch).
10. Verify contactor KM0 picks after a few seconds. When this contactor picks, there should be power to the controller.
11. Check for any AC phasing problems at the elevator controller and that the elevator computer, motor drive, and brake units have power.
12. **ONLY** if you have a **6kVA TAPS** unit **and** the line voltage feeding your elevator controller is 208 or 240VAC, you must set the UPS output to match. For all other units, skip to **Set Parameters** on page 23.

UPS Output Adjust for TAPS 6kVA Units Only

- TAPS 6kVA-480 VAC: UPS is correct at factory default setting (220VAC). No UPS output voltage adjustment is required.
- TAPS 6kVA-240 VAC: The UPS output is set to 220VAC at the factory. If the line voltage for your elevator controller is 208 or 240 VAC, you must set the UPS output voltage to match the controller line voltage.

Check Setting

First, with TAPS and the UPS powered on:

1. Press the Function button. The LCD will display:

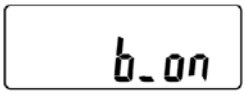

Note

If no button is pressed within 4 to 8 seconds, the LCD will return to the original display.

2. Press the Down Arrow repeatedly until the Output Voltage screen appears.

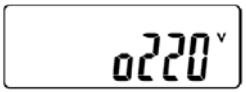

3. If output is set correctly (208 or 240VAC according to line voltage), skip to **Set Parameters** on page 23. If not, proceed with 6kVA UPS Output Setting.

Note

Press the Function button to exit the display screens or, if no button is pressed within 4 to 8 seconds, the LCD will return to the original display automatically.

6kVA UPS Output Setting

1. Press and hold the OFF button until you hear a click and the LCD displays:

2. Press the ON and Down Arrow buttons simultaneously for about 3 seconds. The UPS buzzer will sound twice and the unit will start in settings mode, displaying buzzer status:

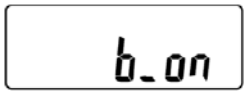

3. Press the Down Arrow button repeatedly until the UPS output voltage is displayed.

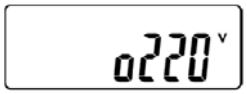

4. Press the Up Arrow button repeatedly until the correct voltage is displayed.

5. Press the Down Arrow button repeatedly until the Save screen appears.

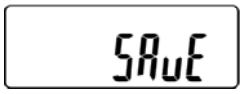

6. Press the Enter button to save your changes. The Save screen will flash for a few seconds then go back to the Off screen.
7. On the back of the UPS, locate the On/Off Utility Input Breaker switch. Use the breaker switch to shut the UPS off. Wait a few seconds, then set the breaker switch back to On. The UPS will display:

8. Press and hold the ON button on the front of the UPS. After a few seconds the UPS will begin a self TEST, followed by an OK message, and then display:

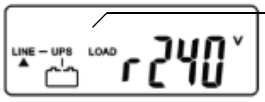

When the UPS has completing "booting", the overbar displayed above LINE-UPS-LOAD will disappear.

9. Re-check the UPS output as described in "Check Setting", page 22. Then, proceed to "Set Parameters" on page 23.

Set Parameters

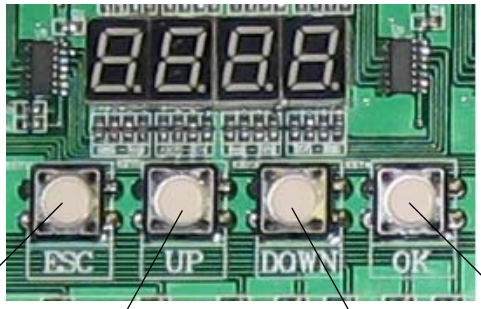

Move between menus

Increments value or advances to next parameter

Previous parameter or moves cursor to the left

Use to select a parameter or save a value. When saving a value, the word YES will be displayed only if the value was changed

Verify or set parameters to factory defaults using the keypad and LED display on the controller board. There are two Function menus, FUN1 and FUN2. Parameters within them are numbered F1-1 through F1-9 and F2-1 through F2-9 respectively. FUN1 values are adjustable; FUN2 values are display only.

Table 7. Menu Parameter Values

Param #	Parameter Name	Description	Units	Range	MCE	User Setting
		FUN1-TAPS Adjustment Settings				
F1-1	Backup Power run-time	Set number of minutes TAPS will run during back up operation. This can be determined by testing as below: 1. Move car to center of tallest floor. 2. Perform a back-up operation. 3. Increase the time taken by one minute and enter that time here.	Minutes	0000 - 0099	8	
F1-2	Backup power level	TAPS will first attempt to move car to nearest landing. If current drawn by that operation exceeds percentage set here, TAPS will pause car to reverse direction. Typically set to 65%. * See note following table.	%	0000 - 0099	65	
F1-3	Time from REV to DWN output	REV output is used to pause car if current setting is exceeded. The DWN output will then start car moving in down direction. This setting determines how long the car should be “paused” before it begins moving down.	Seconds	0000 - 0099	3	
F1-4	Time from UP to REV output	UP output starts initial, up movement of car. If current setting is exceeded, REV output will pause car. This setting determines how long TAPS should allow current setting to be exceeded before REV output is activated.	Seconds	0000 - 0099	3	
F1-5	Backup Power Start voltage	Minimum battery cell voltage required to start backup operation. If cell voltage falls below this setting, the TAPS unit will not attempt to start. Must be less than F2-06 battery voltage display.	Volts	0000–13.00	12.50	
F1-6	Backup Power voltage	During backup, the minimum battery cell voltage needed to continue backup operation. Must be less than F1-05 value. Error E-04 will be displayed.	Volts	0000 – F1-5	10.80	
F1-7	Backup Power Output Voltage Low Limit	If backup voltage drops below this level, the TAPS unit will shutdown. Error E-05 or E-07 will be displayed.	Volts	0000 - 0219	90 for 1 and 3kVA, 165 for 6kVA	
F1-8	Output Test	**FACTORY TEST ONLY!** Must be set to 0 at all times.				
F1-9	Commercial Power Loss Detection Time	Determines duration of power outage before TAPS will begin backup power operation.	Seconds	0000 - 0099	2	
F1-A*	UPS model selection	0 = 1 or 3kVA unit 1 = 6kVA unit		0 or 1		
F1-B	Rescue Complete (P3) execution delay timer	Sets a delay in responding to the Rescue Complete (P3) signal. The Rescue Complete input will be executed as soon as the timer expires or immediately if the timer has already expired.	Seconds	0 -60	0	

* If F1-A is incorrectly set, TAPS functions including UPS reset and backup power output voltage check will not function properly.

Table 8. Display Values

Param #	Parameter Name	Description	Units	Typical Value
		FUN2-Status Display		
F2-1	UPS Operating Current	Display shows UPS actual operating current as percentage of maximum	%	Zero when normal Power is present. Job dependent when backup power is operating
F2-2	UPS actual input Voltage	Display UPS actual input voltage	Volts	120 for 1 and 3kVA, 220 for 6kVA
F2-3	UPS actual input voltage when last fault occurred	Display UPS actual input voltage when last fault occurred	Volts	190
F2-4	UPS actual output Voltage	Display UPS actual output Voltage	Volts	120 for 1 and 3kVA, 220 for 6kVA
F2-5	UPS actual input frequency	Display UPS actual input frequency	Hz	60
F2-6	UPS battery voltage per cell	Display UPS battery voltage per cell	Volts	13.8
F2-7	UPS operating temperature	Display UPS operating temperature	C	25 to 30
F2-8	TAPS countdown from UP output to REV output	TAPS countdown from UP output to REV output	Seconds	Decrementing display

Note

If any displayed values are significantly different than those shown, contact MCE Technical Support.

Final Adjustment

- Ensure the TAPS BYPASS switch is in NORM position and that main line disconnect is on.
- Verify the AC/TAPS DISCONNECT switch is in the ON position.
- Verify OPER is displayed on the TAPS-VF board.
- Verify the NORMAL POWER light on the front panel is on.
- Verify the voltage at terminals L1X, L2X, and L3X.
- Temporarily remove any connection previously made to terminal P3.
- Make sure the elevator is on machine room inspection operation.
- Set the elevator inspection speed to the same value used for the backup operation (typically 12 fpm).
- Based on whether test weights are available, select one of the following two methods for the final adjustment:
  - Balanced load – Load the appropriate test weights into the elevator to achieve a balanced load.
  - Unbalanced/no load
- Press and hold the TEST button located on the front panel of the TAPS unit for the duration set in F1-9. This will force the TAPS unit into the backup power mode.
- Verify the BACKUP POWER light on the front panel is on.

Note

While TAPS is providing power in the backup power mode, the display will show the percentage of the full current capability that is being provided. The value displayed will help determine the value used for parameter F1-2.

Balanced load

1. Run the elevator in the up direction. Note value on the TAPS-VF board display ___.
2. Run the elevator in the down direction. Note value on the TAPS-VF board display ___.
3. The value from steps 1 and 2 should be very close. Set parameter F1-2 using the larger of the two values plus 10. Example: If we get 45 from step 1 and 55 from step 2, we should set the value for F1-2 to 65 (55+10 = 65).

Unbalanced/no load

1. Run the elevator in the up direction. Note value on the TAPS-VF board display ___.
2. Run the elevator in the down direction. Note value on the TAPS-VF board display ___.
3. Divide the sum of the values from steps 1 and 2 by 2, and add 10 to the result. Use this value to set parameter F1-2. Example: If we get 20 from step 1 and 80 from step 2, we should set the value for F1-2 to 60 (20+80 = 100, 100/2 = 50. 50+10 = 60). If the UPS unit trips on overload during step 1 or 2, set parameter F1-2 to 80.

Note

If at any time during the test, the backup run time expires, press the TEST button again to restart the backup power operation.

- Now that the adjustment is completed, reinstall any connection previously made to terminal P3.
- Change controller inspection speed back to its original value.

Functional Test

Mainline Disconnect Verification:

This verifies that the auxiliary contact on the main line disconnect is functional when power is intentionally shut off at the main line disconnect.

1. Verify BS1 and BS2 are connected to the auxiliary contact on the main line disconnect.
2. Set the AC/TAPS DISCONNECT switch to the ON position.
3. Shut off power at the main line disconnect.
4. Verify that the car is not energized and remains stopped.

TAPS and Controller Operation Verification:

1. Ensure the main line disconnect is in the ON position.
2. Ensure the AC/TAPS DISCONNECT switch is in the ON position.
3. Ensure the TAPS BYPASS switch is in the NORMAL position.
4. Verify the NORMAL POWER indicator is on.
5. With empty car, move the elevator on inspection slightly above the leveling zone of the floor with the longest floor distance moving in the up direction.
6. Push and hold the test button until TAPS is in backup power mode. Verify the BACKUP POWER indicator is on.
7. Quickly put the elevator back to normal operation.
8. The elevator should begin to move in the up direction until it reaches the floor above. Once the elevator reaches the floor, it shall cycle the door.
9. If TAPS shuts down before the elevator completes the rescue operation due to the timer set in parameter F1-1 “Backup Power Run Time,” extend the timer accordingly and perform the test again.
10. If TAPS shuts down before the elevator completes the rescue operation due to battery voltage drop below F1-5 (error code E-04), let the TAPS charge for 8 hours before performing this test again.
11. If input P3 “Rescue Operation Complete” is used, TAPS shall shut down once the rescue operation is complete and input P3 is energized. This will immediately cancel the parameter F1-1 “Backup Power Run Time.” If the command is not issued to the TAPS unit, please check wiring and controller output. Please refer to “Troubleshooting” on page 29.
12. If input P2 “Restart Backup Power Operation” is used, verify by pushing the DOB button in the COP to validate proper wiring and operation. This can be done once TAPS has been shut down by either P3 input or parameter F1-1 “Backup Run Time” having elapsed. TAPS shall then restart when the DOB is pressed and will operate until either P3 is activated or parameter F1-1 has expired.
13. If input P1 “Remote Backup Power Operation” is used, verify correct operation by triggering this input from the appropriate controller output or the source it is wired to. To do this, TAPS shall be on commercial power operation and “Normal Power” indicator shall be lighted. When the P1 input is triggered and held for the duration defined by F1-9 “Commercial Power Loss Detection” (factory default is 2 seconds), TAPS shall proceed to “BACK UP” power operation and indicator BACKUP POWER shall light. TAPS shall then operate until cancelled by either input P3 “Rescue operation Complete” or by parameter F1-1 “Backup Power Run Time” having elapsed. Note that shut down may also be caused by drained/discharged batteries, dead batteries, or an inoperative UPS unit. Please refer to “Troubleshooting” on page 29.

Place TAPS in Service

When you have completed startup and verification:

- Set the BYPASS/NORMAL switch to the NORMAL position.
- Ensure the AC/TAPS DISCONNECT switch is OFF.
- Install the TAPS cover.
- Turn the AC/TAPS DISCONNECT switch to ON.

Caution

If the BYPASS/NORMAL switch is in the BYPASS position, TAPS will not respond to a power failure.

Caution

Live voltage in the TAPS unit will now be present on the output wires of the UPS but will be blocked from the controller by the AC/TAPS DISCONNECT switch through contactor KM5.

Danger

Operate the TAPS unit only with the top cover in place to avoid contacting potentially lethal voltages present on internal components.

Periodic Maintenance

Each TAPS unit should be periodically tested at least every six months. See “Functional Test” on page 27.

Troubleshooting

Topics addressed:

- Normal Operation Review
- Utility power normal but UPS on battery mode
- Fault LED lighted; no output
- UPS fails to work when power fails
- No LEDs and no output
- Board troubleshooting
- UPS troubleshooting

TAPS Operation Review

Commercial Power Present

- TAPS backup power source charges automatically
- TDJ relay picks, enabling KMO contactor to pick and opening the feed to the P1 input on the TAPS-VF board
- KMO contactor picks, shunting power directly to the controller and disabling the KM5 contactor (KMO interlocked with KM5)
- Indicator NORMAL POWER lights green

Commercial Power Lost

- TDJ relay drops, disabling KMO contactor and closing feed to the P1 input on the TAPS-VF board
- UPS supplies single phase AC output to power transformer T1, KM5 contactor picks, providing backup power to control
- Indicator BACKUP POWER lights amber

Note

Elevator safety string remains functional when backup power is provided so that no electrical protective devices are rendered ineffective.

Main Line Disconnect Open

This disconnect is a contact between terminals BS1 and BS2. Please refer to “Control Wires BS1 and BS2” on page 12.

- 24V+ signal to TAPS-VF board removed via an auxiliary contact on the disconnect switch (pole 4), ensuring that the KMO and KM5 contactors will not pick.

Lockable AC/TAPS DISCONNECT switch in the OFF Position

- Power is removed from:
  - Elevator control because contactor KMO drops out
  - The internal power source (via this switch)
  - Output of internal power source (via this switch)
  - Power to TAPS-VF board via auxiliary contact on this switch, further ensuring the KMO and KM5 contactors will not pick

UPS Bypass Switch

When the UPS Bypass switch is in the BYPASS position, while commercial power is available, and the AC/TAPS Disconnect switch is on, the KM5 contactor will be disabled and the KMO contactor will pick, bypassing the UPS system in case of malfunction of the TAPS-VF board and/or the UPS system.

Utility Power Normal; UPS on Battery Mode

1. Check that utility voltage is within operating range:
   - 80 to 140 VAC for 120 VAC systems
   - 160 to 280 VAC for 230 VAC systems
2. Check fuses FL1 and FL2; replace if necessary.
3. Check power connections L1, L2, L3.
4. Verify transformer T2 jumpers are installed. Please refer to “Transformer Jumper Schedule, 3 kVA TAPS Units” on page 13.

UPS Fault LED lights; No Output

1. First:
   - Turn off the breaker on the back of the UPS unit.
   - Turn off UPS power (button on the front of the UPS unit).
   - Turn both the breaker and the power button back on.
2. Check for a short circuit on outputs L1X and L2X going to the elevator control.
3. Reduce output load by reducing rescue speed.
4. Check voltage of UPS batteries after 8 hours of charging. If under 12.00 volts, replace.
5. Check UPS fan for proper operation.
6. If all above are normal, contact MCE Technical Support.

TAPS Does Not Engage when Commercial AC Fails

1. Verify that the AC/TAPS DISCONNECT switch is turned ON.
2. Check that the TAPS BYPASS switch is in the NORMAL position.
3. Verify that the TAPS VF board is energized and displaying OPER. (Refer to Circuit Board Troubleshooting below for more detail.)
4. Check wiring connections at the back of the UPS unit.
5. Check fuses FO1 and FO2. Replace if necessary.
6. Verify that UPS switch is turned on. (Check on/off button on front of unit.)
7. Verify transformer T1 jumper wires are installed correctly. Please refer to “Transformer Jumper Schedule, 3 kVA TAPS Units” on page 13.

Utility Power Normal; No Feed-Through Operation

1. Check fuses FL1 and FL2. Replace if necessary.
2. Verify AC/TAPS DISCONNECT switch is ON.
3. Verify that the TAPS VF board is energized and displaying OPER. (Refer to Circuit Board Troubleshooting below for more detail.)
4. Verify relay TDJ is energized.
5. Check power connections L1, L2, L3 and L1X, L2X, L3X if KM0 contactor is picked.

Circuit Board Troubleshooting

Verify presence of 24V at terminals 24- and 24+ on the TAPS VF board. The measured voltage should range from 23 to 24 VDC. If not, check the following:

1. Remove the connector and measure the voltage with the board disconnected. If voltage is present and with 23 to 25 VDC, replace the TAPS-VF board. (MCE part number TAPS-VF.)
2. Verify UPS is turned ON.
3. Verify AC/TAPS DISCONNECT switch is in the ON position.
4. Verify that BS1 and BS2 contacts have continuity (closed) when the main breaker at the wall is in the ON position.
5. Replace 24 VDC power supply located at the back of the TAPS unit behind the UPS. (MCE part number 30-01-0010.)
6. Check for broken or loose wires.

UPS Troubleshooting

Indications:

- Fault indicator is lighted.
- UPS unresponsive to back up.

1. Turn OFF UPS.
2. Turn OFF AC feed to UPS as follows:
   - TAPS-3kVA: Turn OFF breaker at back of UPS (down position).
   - TAPS-6kVA: Turn OFF breaker at back of UPS.
3. Turn ON UPS.
4. Turn ON AC feed to UPS.

Reference

This section contains information useful in further understanding TAPS operation or in diagnosing faults in unit operation:

- Display Codes
- VF Board Output and Input Descriptions
- UPS Unit Information

Table 9. Display Codes

Codes	Description
OPER	TAPS is operational and ready for backup operation.
E-01	The UPS unit has reported a failure.
E-02	Drained batteries: Battery voltage (per unit) has fallen below F1-6 setting.
E-03	Serial communication between the UPS and the TAPS-VF board has failed.
E-04	Battery voltage (per unit) has fallen below the F1-5 setting.
E-05	UPS battery voltage at or below F1-7 setting; checked between normal power dropping out and backup power being provided.
E-06	UPS output voltage missing but UPS/TAPS-VF communication good. Temporarily shut TAPS off to reset UPS.
E07	UPS output voltage has fallen below F1-7 setting during back-up operation.
E-r	Parameter set outside of range during Save operation.
STOP	Operation of TAPS unit prohibited due to one of the errors above.

Table 10. TAPS VF Board Outputs

Outputs	Description
KM1/CM1	KM0 contactor pilot relay: Feed through operation is controlled by this relay output when commercial power is functional. KM0 is interlocked with KM5 contactor so that only one may be closed at a time. Closes when commercial power is present.
KM5/CM2	KM5 contactor pilot relay: TAPS backup operation is controlled by this relay output when commercial power has failed. KM5 is interlocked with KM0 contactor so that only one may be closed at a time. Closes when commercial power is absent.
UPS1/CM3	Closes when backup power mode is operating.
UPS2/CM4	Closes when backup power mode is operating.
DWN/CM5	Closes when down command is active and backup mode is active.
REV/CM6	Closes when REVERSE command is active and backup mode is active.
UP/CM7	Closes when up command is active and backup mode is active.
NF/CM8	Opens after one minute of a persistent fault detected by TAPS VF Board.
ON/CM9	Not applicable for 3 kVA units. Works in conjunction with OFF to reset the 6 kVA unit. One minute after the OFF output has been sent, this output closes for six seconds.
OFF/CM10	UPS reset. When a UPS fault is detected, output closes to reset UPS.

Table 11. TAPS VF Board Inputs

Inputs	Description
P1	Remote backup operation input - A test switch connected at the factory to TAPS input P1 or on-site to a remote test button allows you to initiate a run cycle to periodically determine that TAPS is functioning properly. Please refer to “REMOTE BACKUP OPERATION:” on page 16.
P2	Restart backup operation input - Optional input that can be used to restart the TAPS unit after it has been shut down when the user defined operating time parameter has expired. Please refer to “RESTART BACKUP POWER OPERATION:” on page 16.
P3	Rescue operation complete input - When high (+24V) this input forces the KM5 relay to de-energize and prevent the TAPS unit from providing backup power. This input is activated by the elevator control once the TAPS recall/rescue cycle is complete Please refer to “RESCUE OPERATION COMPLETE INPUT:” on page 17.

UPS Unit Information

Refer to the manual shipped with the UPS unit in addition to the following.

3kVA Units

UPS unit front panel indicators are similar from one size unit to the next.

- Power switch: On/Off — CAUTION: Even when disconnected from input power, high voltage may be present on UPS output connections when this switch is On (battery provided voltage).
- Test OK LED: For stand-alone UPS, lights green when self-test is complete after Test/Silence button is pressed. NOT USED with TAPS unit; use TAPS test instead. Refer to Test Button information on page 4.
- Test/Silence button: Initiates test described above. Silences alarm tone from UPS.
- Fault LED: Lights if the UPS detects an internal fault.
- Bypass LED: Lights when UPS is in bypass mode.
- Utility LED: Lights green when AC power is present and to indicate 100% battery/load level when supplying power.
- Inverter LED: Lights green when inverter is on and to indicate 75% battery/load level when supplying power.
- Battery Low LED: Lights red when battery is low and to indicate 50% battery/load level when supplying power.
- Overload LED: Lights red to indicate an overload and to indicate 25% battery/load level when supplying power.

6kVA Units

The 6kVA unit uses an LCD as well as LEDs.

Item	Symbol	Description
1	*LINE*	Utility or Bypass Supply
2	LOW	Battery Low
3		Battery Abnormal
4		UPS Overload
5		UPS Working in specified mode*
6		A Blackout Transfer occurred in UPS Output
7		Bypass Input Abnormal, UPS failed to transfer to bypass, Bypass Abnormal at ECO mode
8		Utility Input Abnormal
9	**OFF**	UPS Shutdown
10	LINE OFF	UPS Abnormal Lock
11	LINE – UPS – LOAD LOW	UPS Operating Flow Chart
12	°C 88.8.8 V Hz A %	4 Digits Measurement Display
13	▲ ▶	Indications of the measurements
14	J1	Utility Input Normal LED
15	J2	Bypass Input Normal LED
16	N+1	UPS under Redundancy Mode
17	ECO	UPS in ECO Mode
18		UPS Fault or Abnormal Warning LED
19	**EPO**	Emergency Power Off
20	**Er05**	Battery Weak or faulty
21	**Er06**	Output Short Circuit
22	**Er10**	Inverter Over-current
23	**Er11**	UPS Overheat
24	**Er12**	UPS Output Overload
25	**Er15**	Wrong Procedure to Enter Maintenance Mode
26	**Er16**	Parallel System Output Parameters Setting Error
27	**Er17**	ID Numbers are in conflict in Parallel System or ID number Error in single unit
28	**Er21**	Parallel communication error (communication wire disconnected or failure to locate ID1 UPS unit)
29	**Er24**	Bypass Voltage detected when in CVCF mode
30	**Er27**	The UPS must be operated in normal mode in parallel system
31	**Er28**	Bypass Overload Time out, cut off output supply.
32	**Er30**	Inverter Balance Error
33	**Er31**	The settings of both control board and driver board in conflict with each other.
34	**Er****	Other Error code

From the top down, LEDs indicate:

- #1 Lighted green: Utility input voltage within 176 - 280 VAC tolerance. Flashing indicates input voltage within 160 - 175 VAC tolerance.
- #2 Lighted green: Bypass input normal.
- N+1 Lighted green: UPS has sufficient capability to operate under redundancy mode.
- ECO Lighted: UPS working under Economic, Line-interactive mode.
- UPS faulty or abnormal operation.

Button functions:

- Top row, left-to-right:
  - UPS ON/Alarm silence switch
  - Go to previous page or change setting
  - Confirm changes to settings
- Second row, left-to-right:
  - UPS shut down switch
  - Go to next page
- Bottom button: Special functions log in/log out

TAPS Drawings

Drawings to help you troubleshoot each of the TAPS units are included on the following pages.

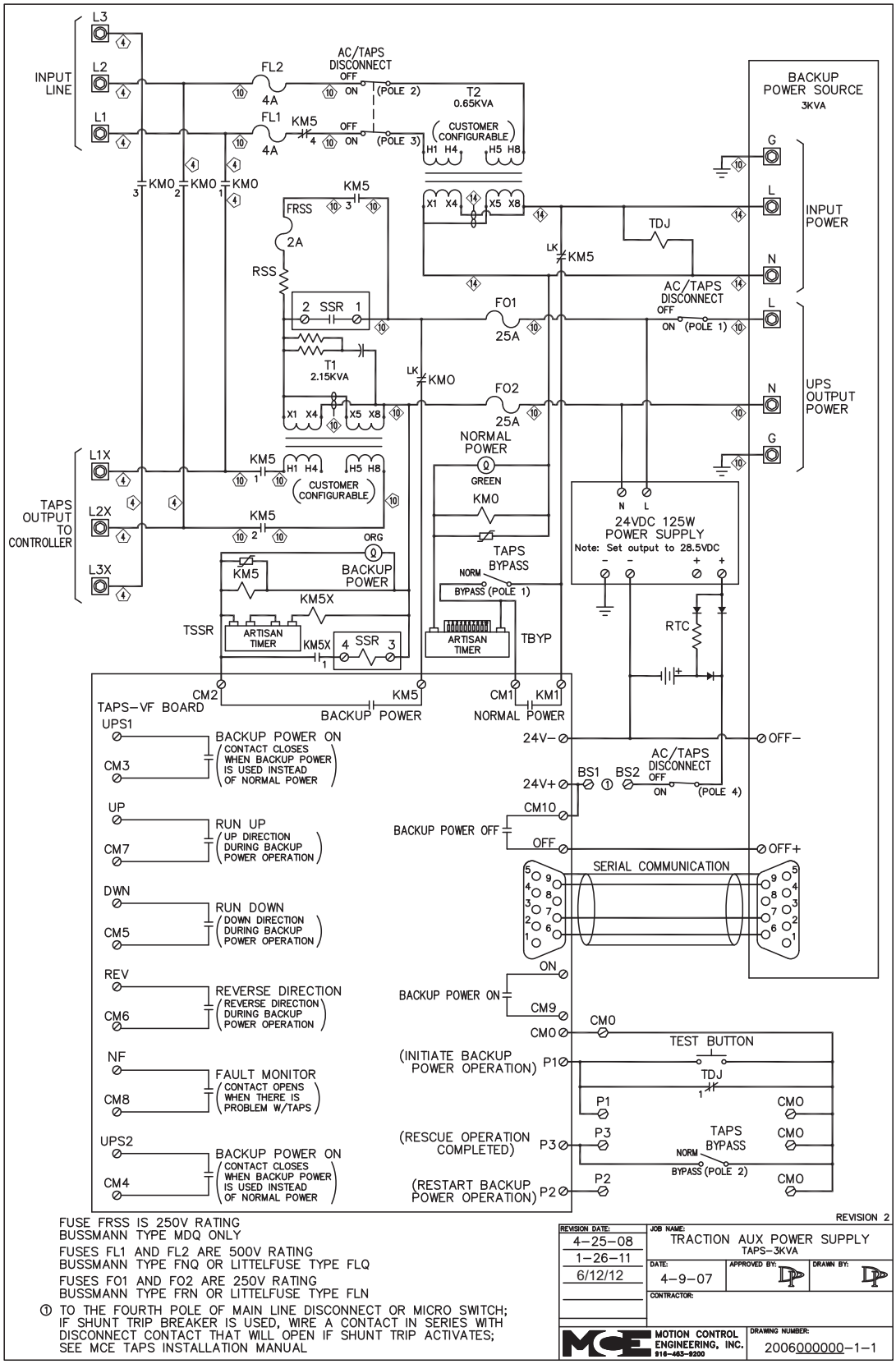
INPUT LINE
L3
L2
L1
FL2
4A
FL1
4A
KM5
AC/TAPS DISCONNECT
OFF
ON
(POLE 2)
(POLE 3)
T2
0.65KVA
CUSTOMER CONFIGURABLE
H1 H4
H5 H8
KM0
FRSS
2A
RSS
SSR
T1
2.15KVA
X1 X4
X5 X8
LK
FO1
25A
FO2
25A
TDJ
(POLE 1)
BACKUP POWER SOURCE
3KVA
G
L
N
INPUT POWER
UPS OUTPUT POWER
NORMAL POWER
GREEN
TAPS OUTPUT TO CONTROLLER
L1X
L2X
L3X
ORG
BACKUP POWER
KM5X
TSSR
ARTISAN TIMER
TAPS BYPASS
NORM
BYPASS (POLE 1)
TBYP
24VDC 125W POWER SUPPLY
Note: Set output to 28.5VDC
RTC
TAPS-VF BOARD
CM2
CM1
KM1
UPS1
CM3
BACKUP POWER ON
(CONTACT CLOSES WHEN BACKUP POWER IS USED INSTEAD OF NORMAL POWER)
UP
CM7
RUN UP
(UP DIRECTION DURING BACKUP POWER OPERATION)
DWN
CM5
RUN DOWN
(DOWN DIRECTION DURING BACKUP POWER OPERATION)
REV
CM6
REVERSE DIRECTION
(REVERSE DIRECTION DURING BACKUP POWER OPERATION)
NF
CM8
FAULT MONITOR
(CONTACT OPENS WHEN THERE IS PROBLEM W/TAPS)
UPS2
CM4
24V−
24V+
BS1
BS2
(POLE 4)
OFF−
OFF
OFF+
CM10
BACKUP POWER OFF
SERIAL COMMUNICATION
ON
BACKUP POWER ON
CM9
CM0
TEST BUTTON
(INITIATE BACKUP POWER OPERATION)
P1
P3
P2
(RESCUE OPERATION COMPLETED)
(RESTART BACKUP POWER OPERATION)
REVISION 2
FUSE FRSS IS 250V RATING
BUSSMANN TYPE MDQ ONLY
FUSES FL1 AND FL2 ARE 500V RATING
BUSSMANN TYPE FNQ OR LITTELFUSE TYPE FLQ
FUSES FO1 AND FO2 ARE 250V RATING
BUSSMANN TYPE FRN OR LITTELFUSE TYPE FLN
① TO THE FOURTH POLE OF MAIN LINE DISCONNECT OR MICRO SWITCH; IF SHUNT TRIP BREAKER IS USED, WIRE A CONTACT IN SERIES WITH DISCONNECT CONTACT THAT WILL OPEN IF SHUNT TRIP ACTIVATES; SEE MCE TAPS INSTALLATION MANUAL
REVISION DATE:
4-25-08
1-26-11
6/12/12
JOB NAME:
TRACTION AUX POWER SUPPLY
TAPS-3KVA
DATE:
4-9-07
APPROVED BY:
DRAWN BY:
CONTRACTOR:
MOTION CONTROL ENGINEERING, INC.
916-463-9200
DRAWING NUMBER:
2006000000-1-1

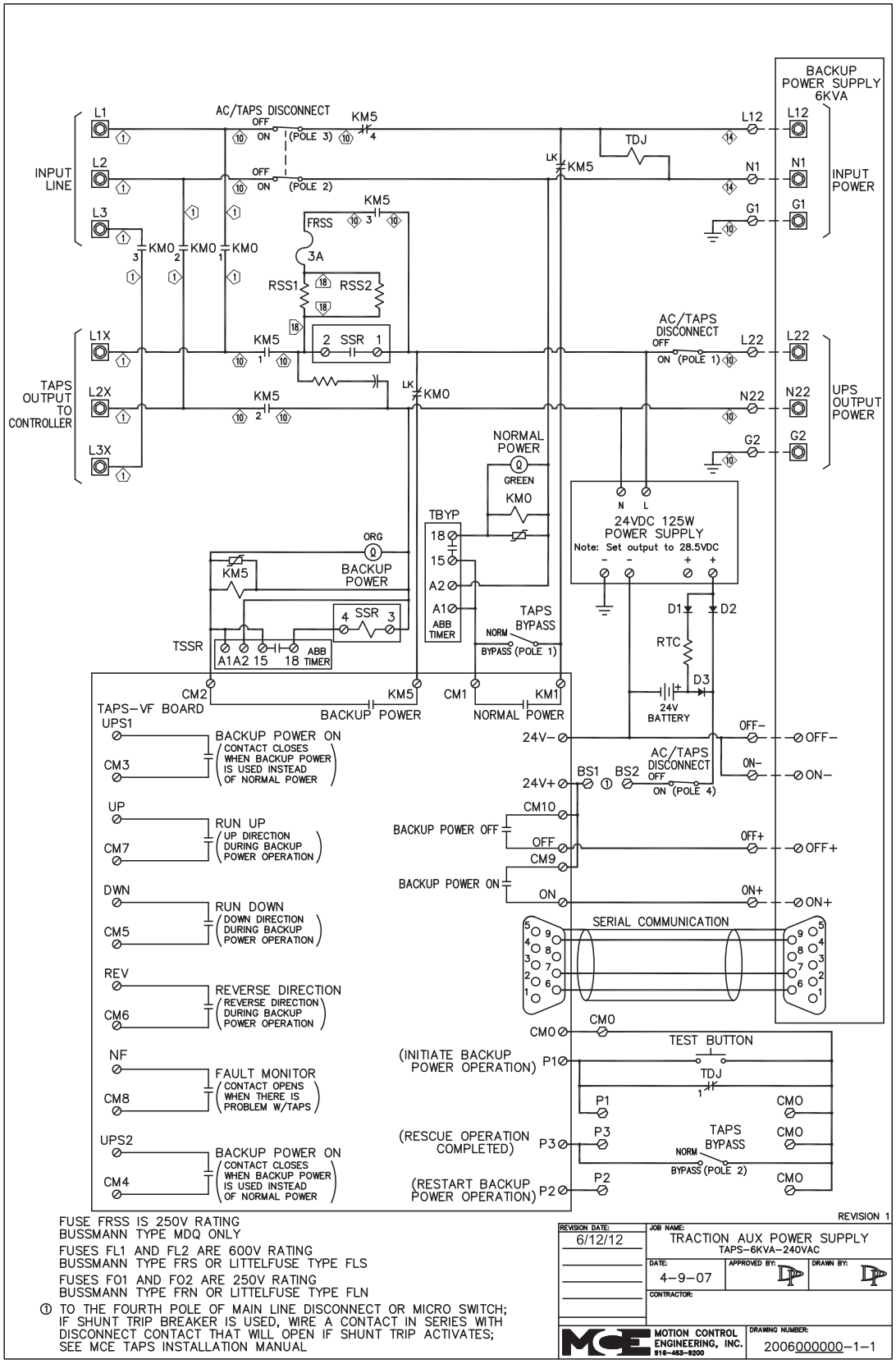
BACKUP POWER SUPPLY 6KVA
INPUT LINE
INPUT POWER
AC/TAPS DISCONNECT
OFF ON (POLE 3)
OFF ON (POLE 2)
KM5
TDJ
LK KM5
L1
L2
L3
L12
N1
G1
KM0
FRSS
3A
RSS1
RSS2
SSR
TAPS OUTPUT TO CONTROLLER
L1X
L2X
L3X
L22
N22
G2
UPS OUTPUT POWER
AC/TAPS DISCONNECT
OFF ON (POLE 1)
LK KM0
NORMAL POWER
GREEN
KM0
TBYP
ORG
BACKUP POWER
24VDC 125W POWER SUPPLY
Note: Set output to 28.5VDC
N L
D1 D2
RTC
D3
24V BATTERY
TAPS BYPASS
NORM
BYPASS (POLE 1)
ABB TIMER
TSSR
A1 A2 15 18 ABB TIMER
CM2
TAPS-VF BOARD
KM5
BACKUP POWER
CM1
KM1
NORMAL POWER
UPS1
CM3
BACKUP POWER ON
CONTACT CLOSES WHEN BACKUP POWER IS USED INSTEAD OF NORMAL POWER
UP
CM7
RUN UP
UP DIRECTION DURING BACKUP POWER OPERATION
DWN
CM5
RUN DOWN
DOWN DIRECTION DURING BACKUP POWER OPERATION
REV
CM6
REVERSE DIRECTION
REVERSE DIRECTION DURING BACKUP POWER OPERATION
NF
CM8
FAULT MONITOR
CONTACT OPENS WHEN THERE IS PROBLEM W/TAPS
UPS2
CM4
BACKUP POWER ON
CONTACT CLOSES WHEN BACKUP POWER IS USED INSTEAD OF NORMAL POWER
24V-
24V+
BS1 BS2
AC/TAPS DISCONNECT
OFF ON (POLE 4)
OFF-
ON-
OFF+
ON+
CM10
BACKUP POWER OFF
OFF
CM9
BACKUP POWER ON
ON
SERIAL COMMUNICATION
CM0
TEST BUTTON
(INITIATE BACKUP POWER OPERATION) P1
TDJ
P1
CM0
(RESCUE OPERATION COMPLETED) P3
P3
TAPS BYPASS
NORM
BYPASS (POLE 2)
CM0
(RESTART BACKUP POWER OPERATION) P2
P2
CM0
REVISION 1
FUSE FRSS IS 250V RATING
BUSSMANN TYPE MDQ ONLY
FUSES FL1 AND FL2 ARE 600V RATING
BUSSMANN TYPE FRS OR LITTELFUSE TYPE FLS
FUSES F01 AND F02 ARE 250V RATING
BUSSMANN TYPE FRN OR LITTELFUSE TYPE FLN
① TO THE FOURTH POLE OF MAIN LINE DISCONNECT OR MICRO SWITCH; IF SHUNT TRIP BREAKER IS USED, WIRE A CONTACT IN SERIES WITH DISCONNECT CONTACT THAT WILL OPEN IF SHUNT TRIP ACTIVATES; SEE MCE TAPS INSTALLATION MANUAL
REVISION DATE: 6/12/12
JOB NAME: TRACTION AUX POWER SUPPLY
TAPS-6KVA-240VAC
DATE: 4-9-07
APPROVED BY:
DRAWN BY:
CONTRACTOR:
MOTION CONTROL ENGINEERING, INC.
916-465-9200
DRAWING NUMBER: 2006000000-1-1

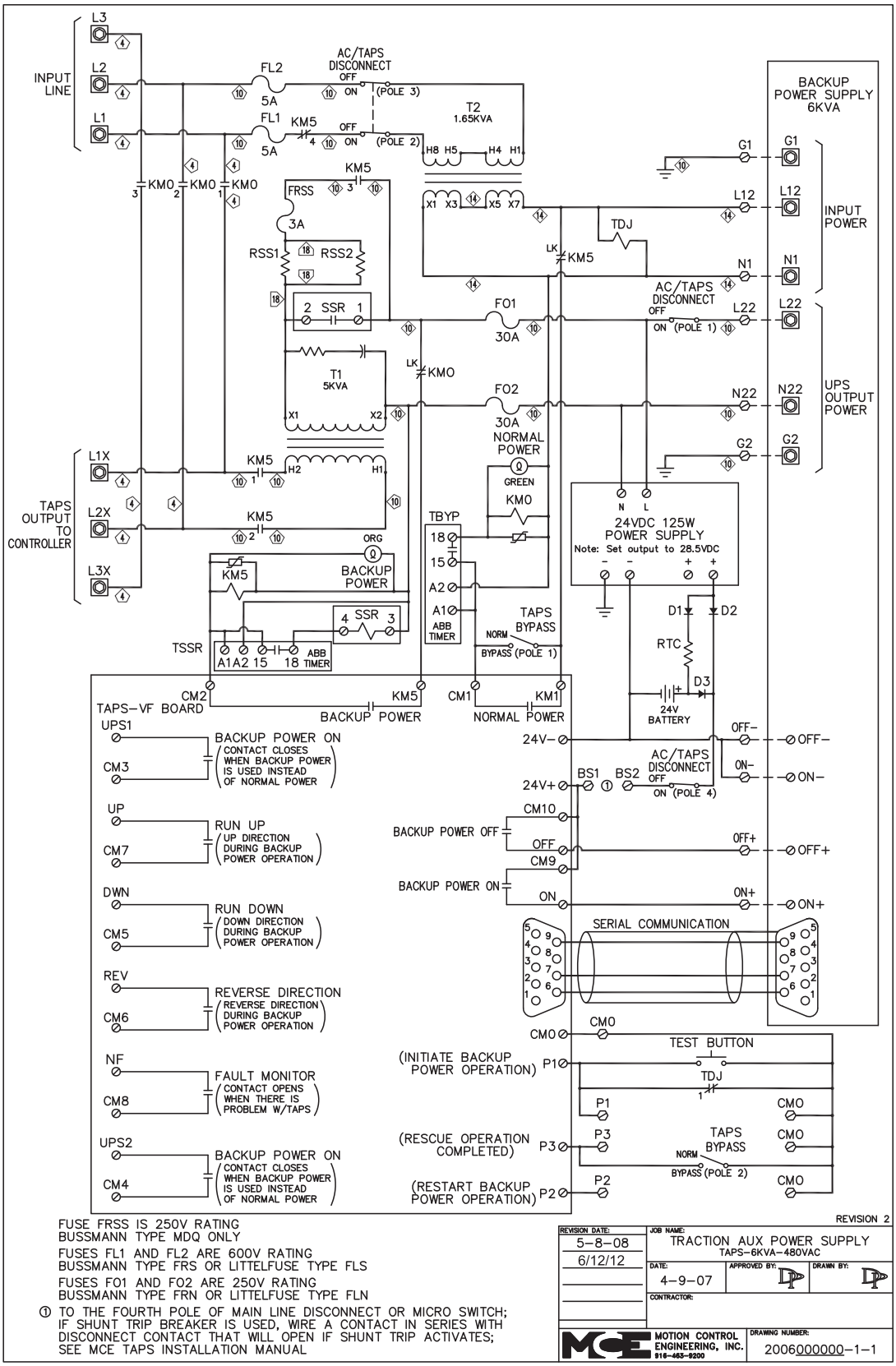

FUSE FRSS IS 250V RATING
BUSSMANN TYPE MDQ ONLY

FUSES FL1 AND FL2 ARE 600V RATING
BUSSMANN TYPE FRS OR LITTELFUSE TYPE FLS

FUSES FO1 AND FO2 ARE 250V RATING
BUSSMANN TYPE FRN OR LITTELFUSE TYPE FLN

① TO THE FOURTH POLE OF MAIN LINE DISCONNECT OR MICRO SWITCH; IF SHUNT TRIP BREAKER IS USED, WIRE A CONTACT IN SERIES WITH DISCONNECT CONTACT THAT WILL OPEN IF SHUNT TRIP ACTIVATES; SEE MCE TAPS INSTALLATION MANUAL