Nidec Drives

Commander C

0.25 kW - 132 kW (0.33 hp to 200 hp)

100 V | 200 V | 400 V | 575 V | 690 V

Commander C Highlights

- Set just 4 parameters to get your drive started.
- Plug-in options for advanced control.
- Dual Safe Torque Off (STO).
- Up to 180 % overload for high torque applications.
- On board PLC.
- Straight forward installation and commissioning.
- Easy motor pairing and performance control.
- Robust and reliable design.
- Induction and Permanent Magnet (SPM) Motor Control.

Commander C Drive Specifications

Power & Control	
Supply Requirements	100 V to 120 V ±10 % 200 V to 240 V ±10 % 380 V to 480 V ±10 % 500 V to 575 V ±10 % 500 V to 690 V ±10 % Maximum supply imbalance: 2 % negative phase sequence (equivalent to 3 % voltage imbalance between phases)
Input Displacement Power Factor	0.97
Phase	1 and 3 (model dependent)
Power Range	0.25 to 132 kW / 0.33 to 200 hp
Input Frequency Range	45 to 66 Hz
Output Frequency/Speed Range	0 to 599 Hz (C200, C300, C300PM, C300 Laundry), 0 to 3,000 Hz (HS30)
Switching Frequency	Size 1 - 4: 0.667, 1, 2, 3, 4, 6, 8 12 & 16 kHz Size 5 - 9: 2, 3, 4, 6, 8 12 & 16 kHz C300 PM: 2, 3, 4, 6, 8 & 12 kHz (Factory default = 3kHz)
Heavy Duty Overload Capability	150 % for 60 s (open-loop mode), 180 % for 3 s (RFC-A or PM mode)
Motor Control	Asynchronous (induction) motors (C200, C300, C300PM, HS30. C300 Laundry) Sensorless permanent magnet motors (C300PM)
Operating Modes	Linear V to F Square V to F Energy Optimiser (Dynamic V to F) Set Point V to F Stator Resistance Compensation RFC-A (enhanced open-loop performance) Sensorless Permanent Magnet Motor Control (C300 PM Only)
Stopping Modes	C200, C300, HS30, C300 Laundry: Coast, Ramp, Ramp & DC Injection Braking, DC Injection Braking with 0 Hz detect, Timed DC Injection Braking, No Ramp C300 PM: Coast, Ramp, No Ramp, Distance Stop
Communication & Interfaces	
Communications	MODBUS RTU, EtherCAT, PROFIBUS, EtherNet IP, DeviceNET, CANopen, PROFINET, POWERLINK, BACnet IP, INTERBUS (all available with AI/SI-options)
Keypads	Fixed LED keypad Remote IP66 Keypad (available as an accessory) Remote IP54 RTC Keypad (available as an accessory) HMI (available as an accessory)
User Software Tools (Free To Download)	**Connect (PC commissioning & cloning tool):** • Project based commissioning tool • Clone and share parameter files • Compare to defaults • Trouble-shoot systems • Run scope traces • Parameter help & tips **Machine Control Studio for on-board PLC programming** • CODESYS based • Included programming languages: ladder diagram, structure text, function block diagram, instruction list, sequential function chart, continuous function chart • Function block libraries • Online monitoring of program variables with user defined watch windows • Support for online change of program

Nidec Drives

Programmable Inputs & Outputs

Functional Safety STO	Dual STO SIL 3 PLe (C300, C300PM, HS30, C300 Laundry)
Analogue	2 x Analogue input Analogue input 1 possible settings: 0-10 V, 0-20 mA, 4-20 mA (Hold), 4-20 mA (Low), 4-20 mA (Stop), 4-20 mA (Error) Analogue input 2 possible settings: 0-10 V, Digital 1 x Analogue Output 0-10 V
Digital	4 x Digital inputs (1 frequency or thermistor input) 1 x Digital input / output (can be used as a frequency or PWM output to represent analogue value)
Digital Input Logic	Positive
Relay	1 x Relay (single pole, single throw)
Accuracy	Frequency 0.02 %, Analogue input 1: 11 bit plus sign, Analogue input 2: 11 bit, Current typical 2 %.
Extra I/O with SI-I/O Option Module (Available as an Accessory)	3 x Analogue inputs (default) / Digital inputs 4 x Digital input / output 1 x Digital input 2 x Relays (single pole, single throw) Positive or Negative Logic (PNP or NPN)
Supported Encoders with SI-Encoder (Available as an Accessory)	Incremental AB (5 V, 8 V, or 15 V)

Mounting & Environment

IP Rating	IP20 Conduit Box UL Type 1 ingress protection (available as an accessory)
Storage Temperature	-40 °C to 60 °C (-40 °F to 140 °F)
Operating Temperature without De-Rate	-20 °C to 40 °C (-4 °F to 104 °F)
Operating Temperature with De-Rate	-20 °C to 60 °C (-4 °F to 140 °F) Frames 1 to 4 -20 °C to 55 °C (-4 °F to 131 °F) Frames 5 to 9
Cooling	Integral cooling fan
Altitude	≤3000 m (≤1000 m no de-rate; 1000 m to 3000 m derate 1 % every 100 m)
Humidity	95 % non-condensing at 40 °C / 104 °F - EN61800-2(3k3)
Pollution	Pollution degree 2 - dry, non-conducting pollution only
Vibration	Reference standard IEC60068-2-27, IEC60068-2-29 bump test, IEC60068-2-64 random vibration test, IEC60068-2-6, EN61800-5-1 sinusoidal vibration test. Tested to Environmental Category ENV3
Mechanical Shock	Tested in accordance with IEC 60068-2-27 and IEC 60068-2-29
Mounting Methods	Frame 1 to 4 – Surface mount via mounting holes or DIN Rail mount Frame 5 to 9 – Surface mount via mounting brackets or through-panel mount via through-panel mounting kit
Mounting Clearance	0 mm either side, 100 mm above and below
Overvoltage Category	Category III
Corrosive Environments	EN 60721-3-3 ISO9223 Class C3
Maximum Motor Cable Length	75 m Frame 1 100 m Frames 2 to 4 200 m Frames 5 to 6 250 m Frames 7 to 9

Standards

Approvals	CE (European Union), cUL Listed (USA and Canada), DNV (marine applications), KC (Korea), RCM (Australia/ New Zealand), EAC (Russian Customs Union), UKCA (United Kingdom), C-Tick (Australia)
Product Safety Standards	UL 508C IEC/EN/KN 61800-5-1 CSA C22.2 No.274 GB12668.501-2013
TÜV	C300, C300PM, HS30, C300 Laundry models only: The Safe Torque Off (STO) function may be used as a safety component of a machine. Type examination certificates by TÜV Rheinland: Frame sizes 1 - 4: No. 01/205/5383.03/18 Frame sizes 5 - 9: No. 01/205/5387.02/18

Product EMC Standards	IEC/ EN 61800-3 Immunity and Emissions (Meets equipment category C3 with internal filter, with an external EMC filter C1 or C2 can be achieved) EN 61000-6-2: Immunity for industrial environments (Complies) EN 61000-6-4: Emissions for industrial environments (External EMC filter required to comply) EN 61000-3-2: Harmonic current emissions (External line reactor required to comply)
RoHS	Complies with the Restriction of Hazardous Substances Directive (2011/65/EU)
Immunity Compliance	Second environment (Industrial)
ISO	Manufacturing facilities comply with ISO 9001:2015 and ISO 14001
Warranty	
Warranty	5 Years (warranty terms and conditions apply)
Accessories	
Remote Interfaces	Remote keypad IP66, Remote keypad RTC, HMI
Filters & Cables	External EMC filters, line reactors
PC Tools Programming Cable	CT communications cable
Communication & Feedback, SI-Options	AI-485 24 V Adaptor (MODBUS), SI-EtherCAT, SI-PROFIBUS, SI-Ethernet , SI-DeviceNET, SI-CANopen, SI-PROFINET , SI-POWERLINK, SI-Encoder, SI-I/O, SI-BACnet IP, SI-Interbus (500 kBd or 2 MBd)
Back-up & Cloning	AI-Back-up Adaptor AI-Smart Adaptor (Includes 4GB SD card)
Conduit Box	For UL Type 1 ingress protection
Protection	
Conformal Coating	✓
Fire Mode	✓
DC Bus Undervoltage Error Level	100 V models: 175 Vdc | 200 V models: 175 Vdc | 400 V models: 330 Vdc | 575 V models: 435 Vdc | 690 V models: 435 Vdc
DC Bus Overvoltage Error Level	Frame sizes 1 - 4: 100 V models: 510 Vdc | 200 V models: 510 Vdc | 400V models: 870 Vdc Frame size 5 - 9: 200V models: 415 Vdc | 400 V models: 830 Vdc | 575 V models: 990 Vdc | 690 V models: 1190 Vdc
Drive Overload Error	Programmable: Default settings: 180% for 3s, 150% for 60s
Instantaneous Overcurrent Error/Limit	220% of rated motor current
Phase Loss Error	DC Bus Ripple Threshold Exceeded
Overtemperature Error	Control Board Over Temperature, Inverter Model Temperature, Inverter Thermistor Temperature, Drive heatsink temperature exceeds 95°C (203°F)
Short Circuit Error	Protection against output phase-to-phase fault
Ground Fault Error	Protection against output phase-to-ground fault
Motor Thermal Protection	Electronically protects the motor from over-heating due to loading conditions
Keep Running	Parameter set to avoid errors and machine downtime
Dedicated Thermistor Input	Avoid downtime or machine damage due to overheated motor
General	
Items supplied with the drive	Step-By-Step Guide, Safety Information, Grounding bracket, Surface mounting brackets (frame 5 to 9)

Nidec Drives

Functionality

Modbus RTU Communications (available with AI-485 Adaptor)	
Control Word Control	✓
Serial Baud Rate	600 to 115200 bps
Modbus RTU Mode	8.2NP, 8.1NP, 8.1EP, 8.1OP, 7.1 EP, & 7.1 OP
On Board PLC	
User Memory Space	30 KB
Pre-set Programs (Available on Request)	Unbalanced Load Detection (Laundry drive variant), Solar Pump (Available in Connect)
Custom Application Parameters	64
Reference	
Selectable References	Analogue input 1, analogue input 2, pre-set speeds, keypad reference, motorised pot reference, frequency input, PID output or communication control
Jog Reference	✓
Up / Down % Reference (Motorised Pot)	✓
Bi-Polar Reference	✓
Pre-set Speeds	8
Pre-set Timer	✓
Skip Frequencies	3
Skip Frequencies Dead Band	✓
Local/Remote	✓
S-Ramp	✓
Acceleration Rates	8
Deceleration Rates	8
Frequency Input Reference (Pulse Train)	0 Hz to 100 kHz
Torque Reference	✓
Application Specific	
PID Controller	PID Control
PID Feedforward	✓
PID Threshold Detector	✓
PID Slew Rate	✓
Input Scaling	✓
Run Permit (Latching Run)	✓
Control	
Motor Stability Optimiser	✓
Slip Compensation	✓

Auto-tune	Static, Rotating & Inertia
Catch an Already Spinning Motor	✓
Speed Feedback via SI-Encoder Option	✓
Second Motor Set-up	✓
Motor Pre-Heat Control	✓
Built-in Braking Transistor (External Resistor Required)	✓
Mechanical Brake Controller	✓
Supply Loss Detection	✓
Motor Phase Loss Detection	✓
Low D.C. Link Operation	✓
Analogue Input Control	✓
Analogue Output Control	✓
Digital Input Control	✓
Digital Output Control	✓
Relay Control	✓
Logic Function Control	✓
Timer Function Control	✓
Limit Switch Control	✓
Temperature Monitoring	✓
Keypad Button Assignment	✓
Programmable Output Current Limit	✓
General	
Error History Log	10
Auto-Reset After Error	✓
Error Time Stamping	✓
Power Loss Ride Through	✓
Run Time Log	✓
Cloning	Via: SD Card, Connect
Energy Meter	✓
Security PIN	✓

Nidec Drives

Dimensions

Commander C Dimensions

Frame Size	Overall Dimensions						Mounting Dimensions				Mounting Hole Dia.		Weight	
	mm			in			mm		in		mm	in	kg	lb
	H	W	D	H	W	D	H	W	H	W				
1	160	75	130	6.30	2.95	5.1	143	53	5.7	2.08	5.0	0.20	0.75	1.65
2	205	75	150	8.07	2.95	5.9	194	55	7.63	2.17	5.0	0.20	1.3	3.0
3	226	90	160	8.90	3.54	6.3	215	70.7	8.46	2.80	5.0	0.20	1.5	3.3
4	277	115	175	10.90	4.50	6.9	265	86	10.43	3.40	6.0	0.23	3.13	6.9
5	391	143	200	15.39	5.63	7.87	375	106	14.76	4.17	6.5	0.26	7.4	16.3
6	391	210	227	15.39	8.27	8.94	378	v19614.88	14.88	7.72	7.0	0.28	14.0	30.9
7	557	270	280	21.93	10.63	11.02	538	220	21.18	8.66	9.0	0.35	28.0	61.7
8	804	310	290	31.65	12.21	11.42	784	259	30.87	10.20	9.0	0.35	52.0	114.6
9E	1069	310	290	42.09	12.21	11.42	1051	259	41.38	10.20	9.0	0.35	46.0	101.4
9A	1108	310	290	43.62	12.21	11.42	1090	259	42.91	10.20	9.0	0.35	66.5	146.6

Documentation & Downloads

Product documentation and PC tools available for download from:

www.controltechniques.com/support

Connections

Typical Power Connections

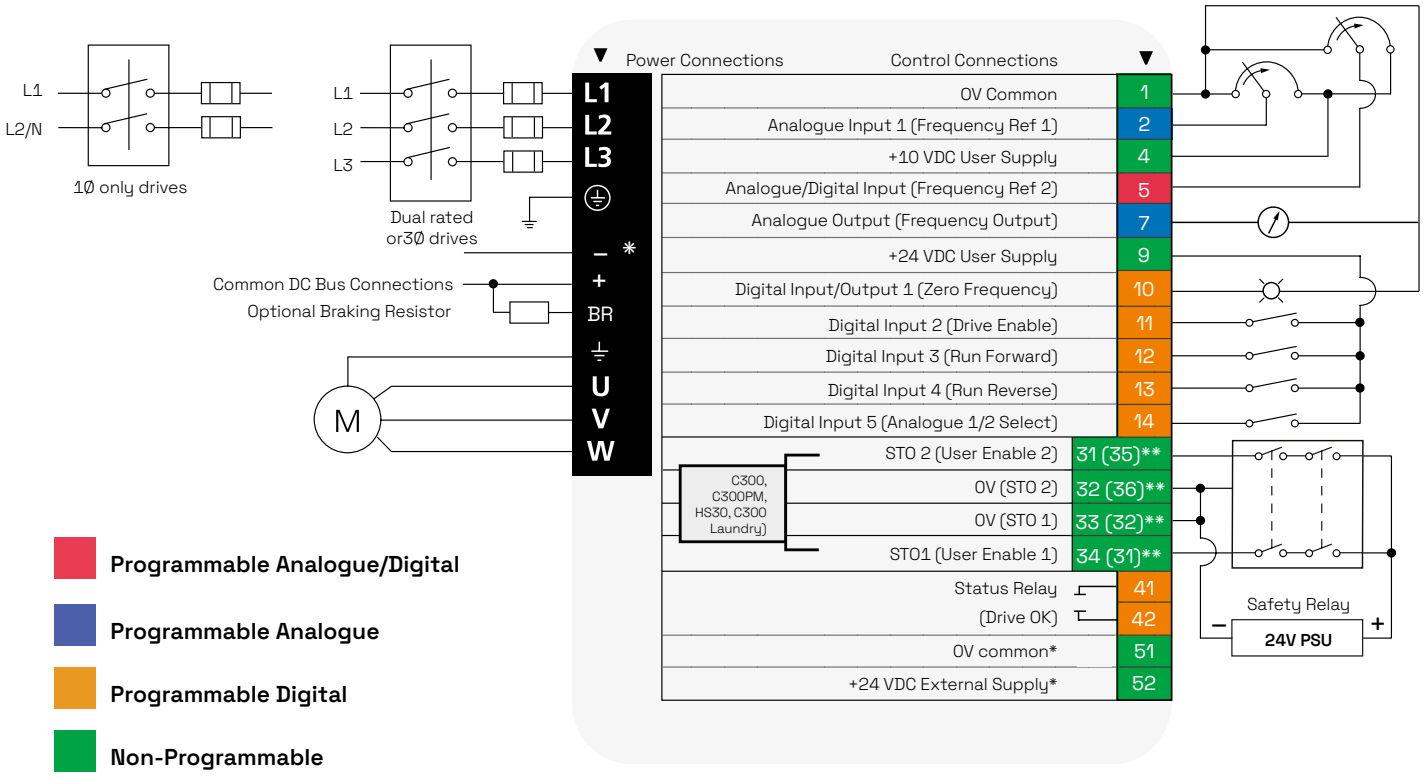

Programmable Analogue/Digital

Programmable Analogue

Programmable Digital

Non-Programmable

*** Only frame size 6 to 9**

Product codes

C200- 03 4 00073 A - 101 00 AB100

Model:
C200
Without STO
C300
With Dual STO for C300, C300PM, C300 Laundry Variants
HS30 - High Speed Variant

Frame Size
1 to 9

Voltage Rating:
1: 100 V drive (100 V to 120 V ±10 %)
2: 200 V drive (200 V to 240 V ±10 %)
4: 400 V drive (380 V to 480 V ±10 %)
5: 575 V drive (500 V to 575 V ±10 %)
6: 690 V drive (500 V to 690 V ±10 %)

Current Rating:
Heavy Duty current rating x 10

Drive Format:
A – AC in AC out
E – AC in AC out, External line reactor

Control Version:
101 - C200, C300, HS30, C300 Laundry Variants
141 - C300PM

Regional Default Setting:
00 – 50 Hz
01 – 60 Hz

Product Variant:
AB100- Standard for C200, C300, C300PM, HS30 Variants
KLD00 - Laundry Drive for C300 Laundry Variant

Model number and ratings

Product Code	Supply Phases	Frame Size	Heavy Duty			Normal Duty		
			Max Continuous Current (A)	Motor Shaft Power (kW)	Motor Shaft Power (hp)	Max Continuous Current (A)	Motor Shaft Power (kW)	Motor Shaft Power (hp)
100/120 Vac +/-10%								
C200-01100017A10100AB100	1	01	1.7	0.25	0.33	For Normal Duty applications, use Heavy Duty ratings.		
C200-01100024A10100AB100	1	01	2.4	0.37	0.5			
C200-02100042A10100AB100	1	02	4.2	0.75	1			
C200-02100056A10100AB100	1	02	5.6	1.1	1.5			
200/240 Vac +/-10%								
C200-01200017A10100AB100	1	01	1.7	0.25	0.33	For Normal Duty applications, use Heavy Duty ratings.		
C200-01200024A10100AB100	1	01	2.4	0.37	0.5			
C200-01200033A10100AB100	1	01	3.3	0.55	0.75			
C200-01200042A10100AB100	1	01	4.2	0.75	1			
C200-02200024A10100AB100	1 | 3	02	2.4	0.37	0.5			
C200-02200033A10100AB100	1 | 3	02	3.3	0.55	0.75			
C200-02200042A10100AB100	1 | 3	02	4.2	0.75	1			
C200-02200056A10100AB100	1 | 3	02	5.6	1.1	1.5			
C200-02200075A10100AB100	1 | 3	02	7.5	1.5	2			
C200-03200100A10100AB100	1 | 3	03	10	2.2	3			
C200-04200133A10100AB100	1 | 3	04	13.3	3	3			
C200-04200176A10100AB100	3	04	17.6	4	5			
C200-05200250A10100AB100	3	05	25	5.5	7.5	30	7.5	10
C200-06200330A10100AB100	3	06	33	7.5	10	50	11	15
C200-06200440A10100AB100	3	06	44	11	15	58	15	20
C200-07200610A10100AB100	3	07	61	15	20	75	18.5	25
C200-07200750A10100AB100	3	07	75	18.5	25	94	22	30
C200-07200830A10100AB100	3	07	83	22	30	117	30	40
C200-08201160A10100AB100	3	08	116	30	40	149	37	50
C200-08201320A10100AB100	3	08	132	37	50	180	45	60
C200-09201760A10100AB100	3	09	176	45	60	216	55	75
C200-09202190A10100AB100	3	09	219	55	75	266	75	100
C200-09201760E10100AB100	3	09	176	45	60	216	55	75
C200-09202190E10100AB100	3	09	219	55	75	266	75	100
380/480 Vac +/-10%								
C200-02400013A10100AB100	3	02	1.3	0.37	0.5	For Normal Duty applications, use Heavy Duty ratings.		
C200-02400018A10100AB100	3	02	1.8	0.55	0.75			
C200-02400023A10100AB100	3	02	2.3	0.75	1			
C200-02400032A10100AB100	3	02	3.2	1.1	1.5			
C200-02400041A10100AB100	3	02	4.1	1.5	2			
C200-03400056A10100AB100	3	03	5.6	2.2	3			
C200-03400073A10100AB100	3	03	7.3	3	3			
C200-03400094A10100AB100	3	03	9.4	4	5			
C200-04400135A10100AB100	3	04	13.5	5.5	7.5			
C200-04400170A10100AB100	3	04	17	7.5	10			

C200-05400270A10100AB100	3	05	27	11	20	30	15	20
C200-05400300A10100AB100	3	05	30	15	20	30	15	20
C200-06400350A10100AB100	3	06	35	15	25	38	18.5	25
C200-06400420A10100AB100	3	06	42	18.5	30	48	22	30
C200-06400470A10100AB100	3	06	47	22	30	63	30	40
C200-07400660A10100AB100	3	07	66	30	50	79	37	60
C200-07400770A10100AB100	3	07	77	37	60	94	45	60
C200-07401000A10100AB100	3	07	100	45	75	112	55	75
C200-08401340A10100AB100	3	08	134	55	100	155	75	100
C200-08401570A10100AB100	3	09	157	75	125	184	90	150
C200-09402000A10100AB100	3	09	200	90	150	221	110	150
C200-09402240A10100AB100	3	09	224	110	150	266	132	200
C200-09402000E10100AB100	3	09	200	90	150	221	110	150
C200-09402240E10100AB100	3	09	224	110	150	266	132	200
500/575 Vac +/-10%								
C200-05500030A10100AB100	3	05	3	1.5	2	3.9	2.2	3
C200-05500040A10100AB100	3	05	4	2.2	3	6.1	4	5
C200-05500069A10100AB100	3	05	6.9	4	5	10	5.5	7.5
C200-06500100A10100AB100	3	06	10	5.5	7.5	12	7.5	10
C200-06500150A10100AB100	3	06	15	7.5	10	17	11	15
C200-06500190A10100AB100	3	06	19	11	15	22	15	20
C200-06500230A10100AB100	3	06	23	15	20	27	18.5	25
C200-06500290A10100AB100	3	06	29	18.5	25	34	22	30
C200-06500350A10100AB100	3	06	35	22	30	43	30	40
C200-07500440A10100AB100	3	07	44	30	40	53	45	50
C200-07500550A10100AB100	3	07	55	37	50	73	55	60
C200-08500630A10100AB100	3	08	63	45	60	86	75	75
C200-08500860A10100AB100	3	08	86	55	75	108	90	100
C200-09501040A10100AB100	3	09	104	75	100	125	110	125
C200-09501310A10100AB100	3	09	131	90	125	155	110	150
C200-09501040E10100AB100	3	09	104	75	100	125	110	125
C200-09501310E10100AB100	3	09	131	90	125	155	110	150
500/690 Vac +/-10%								
C200-07600190A10100AB100	**3**	07	19	15	20	23	18.5	25
C200-07600240A10100AB100	**3**	07	24	18.5	25	30	22	30
C200-07600290A10100AB100	**3**	07	29	22	30	36	30	40
C200-07600380A10100AB100	**3**	07	38	30	40	46	37	50
C200-07600440A10100AB100	**3**	07	44	37	50	52	45	60
C200-07600540A10100AB100	**3**	07	54	45	60	73	55	75

Notes: The listed ordering codes are for C200, 50 Hz default setting.
For C300 change the model digits from C200 to C300 (C300-xxxxxxxxxxxxxxxxxxx).
For C300PM, change the control version digits to 141 and the model to C300: (C300-xxxxxxxxx141xxxxxxx).
For HS30 change the model digits from C200 to HS30 (HS30-xxxxxxxxxxxxxxxxxxx).
For C300 Laundry change change the model digits from C200 to C300 and the product variant digits from AB100 to KLD00 (C300-xxxxxxxxxxxxxxKLD00).
For 60Hz change the regional default setting digits from 00 to 01 (xxxx-xxxxxxxxxxxx01xxxxx).

Nidec
All for dreams

Connect with us

www.controltechniques.com

© 2025 Nidec Control Techniques Limited. The information contained in this brochure is for guidance only and does not form part of any contract. The accuracy cannot be guaranteed as Nidec Control Techniques Ltd have an ongoing process of development and reserve the right to change the specification of their products without notice.

Nidec Control Techniques Limited. Registered Office: The Gro, Newtown, Powys SY16 3BE. Registered in England and Wales. Company Reg. No. 01236886

DS_Commander C_Iss 06_EN 02/25