Nidec Drives

HVAC Drive H300

HVAC drive H300 highlights

- Seamless integration with Building Automation Systems.
- Flexibility without a Building Management System
- Onboard Fire mode.
- Quiet operation with Rotor Flux Control modes, high switching frequencies (up to 16 kHz).
- Intelligent 10 speed drive cooling fan.
- Conformally coated PCBs as standard.
- Among the most compact VFD in its class.
- Built-in dual process PID loops that can operate independently or be combined to provide more complex functionality.
- Exponential energy savings through fitting a Control Techniques Variable Frequency Drive into the application.
- HVAC Drive H300 provides high energy efficiency, up to 98% where very little energy is lost in the conversion.
- Dynamic Volts/Hertz energy optimisation minimises power loss under low load conditions.

Key functions

Function		Function	
Guided set-up via 'Connect' commissioning software	✓	Temperature monitoring	✓
On Board Comms ModBus RTU, BACnet MSTP	✓	Digital inputs	3-6
Control mode: Induction motor operation	✓	Digital outputs	0-3
Control Mode: Sensor-less RFCA Induction Motor Operation	✓	Relays (normally open/normally closed)	2
Control mode: Sensor-less Permanent magnet motor operation	✓	Motorised potentiometer	✓
Auto-tune static	✓	Logic function control	✓
Auto-tune rotating	✓	Timer function control	✓
Filter Change Timer	✓	Variable selector/ Threshold Detectors	✓
Time before Filter Change Due	✓	PID controllers	2
Hand/Off/Auto control	✓	Energy meter	✓
User Security Access	✓	Trip time stamping	✓
Supply loss detection	✓	Trip logging	10
Low DC link operation	✓	Skip frequency dead bands	✓
Catch a spinning motor	✓	Control word	✓
Stop mode: Ramp	✓	Auto reset	✓
Stop mode: Coast	✓	Parameter cloning	✓
Stop mode: Fast ramp	✓	Additional application parameters	148
Programmable braking	✓	On-board oscilloscope function	✓
Motor pre-heat mode	✓	On-board PLC	✓
Bi-polar references	✓	SD card adapter	✓
Skip frequencies	✓	SMARTCARD	✓
Fire Mode	✓	Acceleration rates	4
Demand based sleep mode	✓	Deceleration rates	4
Analogue inputs	2	S Ramp	✓
Analogue outputs	2		

Nidec Drives

Specification

H300	
Items supplied with the drive	Step-By-Step Guide, safety information, grounding bracket, grounding clamp, DC terminal cover grommets, terminal nuts, supply and motor connector, surface mounting brackets, control terminals, relay connectors, 24Vpower supply connector and finger guard grommets
Storage temperature	-40°C to 55°C, -40°F to 131°F
Operating temperature without de-rate	-20°C to 40°C, -4°F to 104°F
Operating temperature with de-rate	40°C to 55°C, 104°F to 131°F
Supply requirements	Maximum supply imbalance: 2 % negative phase sequence (equivalent to 3 % voltage imbalance between phases). Input frequency 45 to 66Hz
Switching frequency range	2,3,4,6,8,12,16kHz (Factory default = 3kHz)
Approvals	CE (European Union), cUL Listed (USA and Canada), RCM (Australia/ New Zealand), EAC (Russian Customs Union), UKCA
Product safety standard	EN61800-5-1
Functional safety	Single STO Function
Altitude	1000m – No de-rate. 1000m to 3000m - 1% de-rate/100m
Humidity	95% Non-condensing
Pollution	Degree 2. Dry, non-conducting pollution only
IP Rating	IP20 – Pollution degree 2
Vibration	Reference standard IEC60068-2-29 bump test, IEC60068-2-64 random vibration test, IEC60068-2-6, EN61800-5-1 sinusoidal vibration test.
Mounting methods	Surface mount or through-panel mount via mounting brackets
Output frequency/speed range	599Hz
Braking	In-built braking transistor, external resistor required.
Operating modes	Open Loop Induction Motor V/F, RFC-A (sensorless induction motor) RFC-S (sensorless, and feedback via option module)
Overload capability	110% for 165s from cold or for 9s from 100% load
Overvoltage category	Evaluated for OVC III.

Corrosive environments	Concentrations not exceeding levels set in: EN 50178:1998 Table A2 IEC 60721-3-3 Class 3C2
Immunity Compliance	IEC61800-3, EN60800-6-2, IEC 61000-4-2, IEC 61000-4-3, IEC61000-4-4, IEC61000-4-5, IEC61000-4-6,
	IEC61000-4-11, IEC61000-6-1, IEC 61000-6-2.
Emission compliance	Capable of meeting the requirements of Equipment Category C3 without external filters or line reactors. Capable of meeting the requirements of Equipment Category C2 when installed with the recommended filters and line reactors. IEC61800-3, EN61000-6-4, EN61000-3-2, EN61000-3-12, EN61000-3-3, EN12015
Cooling	Forced cooled
Safe Torque off	Single STO. SIL 3
Communications	- RS485 with Modbus RTU - BACnet MS/TP - EtherNet/IP, PROFIBUS, PROFINET, DeviceNET, POWERLINK and CANopen via option modules
Control I/O	2 x analogue input, 2 x analogue outputs, 3 x Digital I/O programmable, 3 x Digital input, 2 x NO relay 250Vac Max., 5 x 0V common, 1 x 24V user output, 1 x 24V external input, 1 x STO input. Additional I/O available with SI-I/O option module.
Accuracy	Frequency 0.01%, Analogue input 1 and 2: 11 bits plus sign, Current accuracy typical 2%.
On-Board user program capability	N/A, Only via additional MCI200/ 210 Option Module
Keypad (LCD)	KI- HOA keypad RTC (real time clock), optional HOA Remote Keypad
PC Tools	'Connect' commissioning and cloning tool including CT Oscilloscope, Machine Control Studio for On-board PLC programming.
Warranty	5 Years (warranty terms and conditions apply)
Supported options	HMI, Remote Keypad RTC, SI-I/O, Remote I/O, SI-Encoder (speed feedback), SI-Universal Encoder, MCi200 (second processor), MCi210 (second processor), SI-Ethernet, SI-DeviceNET, SI-PROFIBUS, SI-PROFINET, SI-POWERLINK, SI-CANopen, KI-485 comms adapter, SD card adapter, SMARTCARD
Accessories	Through-hole IP65 (frame 3 to 8) or IP55 (frame 9 to 11) mounting kits, UL type conduit kits, retrofit mounting brackets, external EMC filters and grounding bracket (supplied with the drive)

Documentation & Downloads

Product documentation and PC tools available for download from:
www.controltechniques.com/support

Dimensions

Frame Size	Overall Dimensions						Mounting Dimensions				Mounting Hole Diameter		Weight	
	mm			in			mm		in		mm	in	kg	lb
	H	W	D	H	W	D	H	W	H	W				
3	382	83	200	15.03	3.26	7.87	365	73	14.37	2.87	5.5	0.21	4.5	9.92
4	391	124	200	15.39	4.88	7.87	365	106	14.37	4.17	6.5	0.26	6.5	14.33
5	391	143	200	15.39	5.63	7.87	365	106	14.37	4.17	6.5	0.26	7.4	16.3
6	391	210	287	15.39	8.27	11.29	365	196	14.37	7.72	7	0.28	14	30.9
7	552	270	280	21.73	10.63	11.02	508	220	20	8.66	9	0.35	28	61.70
8	804	310	290	31.65	12.21	11.42	753	259	29.64	10.20	9	0.35	52	114.6
9A	1108	320	290	43.62	12.59	11.42	1049	259	41.29	10.20	9	0.35	46	101.4
9E and 10E	1069	310	290	42.08	12.21	11.42	1010	259	39.76	10.20	9	0.35	46	101.4
11E	1242	310	313	48.89	12.21	12.32	1189	259	46.81	10.20	9	0.35	63	138.8
12	1750	295	526	68.90	11.61	20.71	N/A	N/A	N/A	N/A	N/A	N/A	130	287

Connections

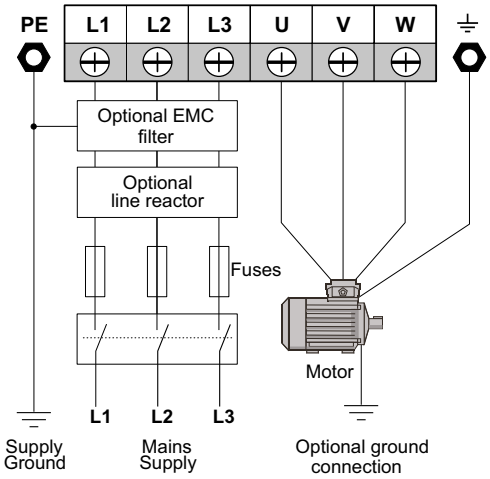

Typical Power Connections

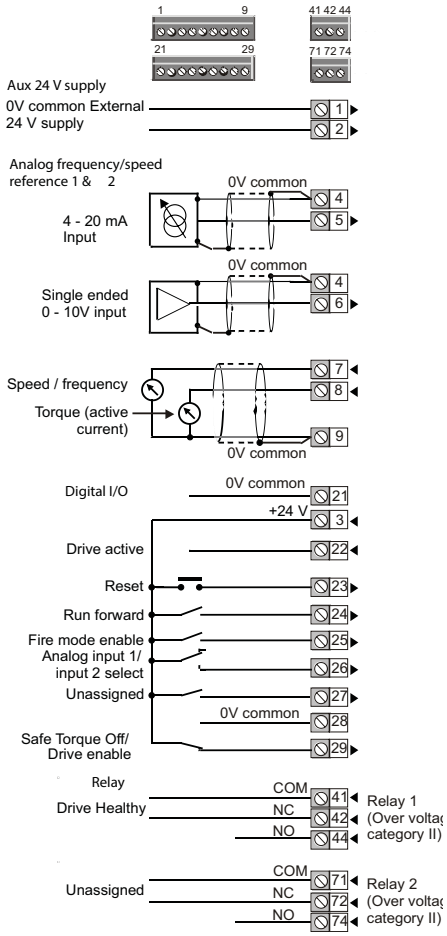

Default Control Connections

Part numbers

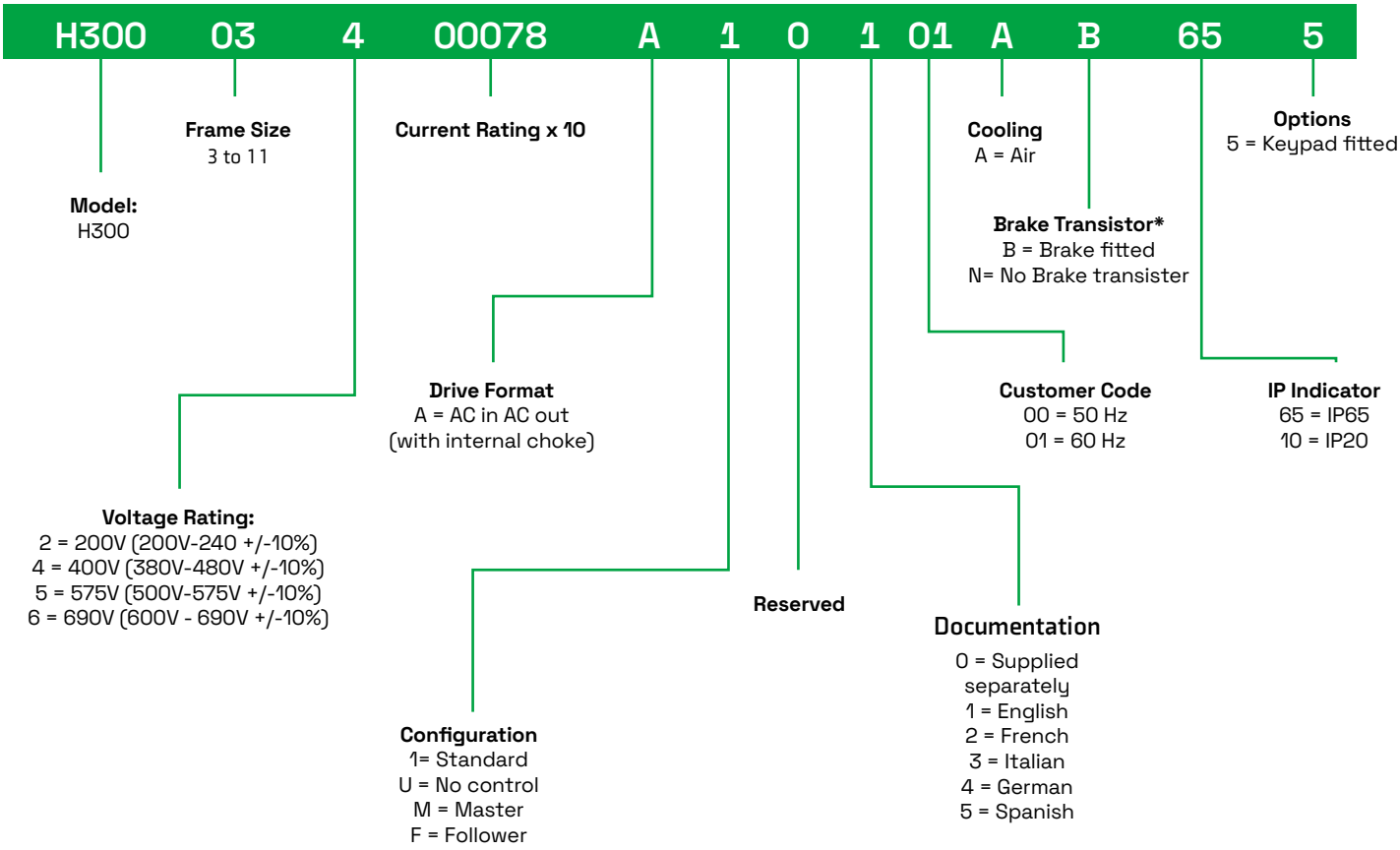

*B only for frames 3 – 8. N only for frames 9 – 11.

Manuals

H300 is supplied with a Step-by-Step Setup Guide to assist with fast, efficient commissioning. A detailed user guide is also available to download online, or can be requested from Control Techniques Drive Centres and Partners.

Model number and ratings

200/240 Vac ±10%				
Product Code	Normal Duty			
	IP20 Max continuous current (A)	Motor shaft power (kW)	Motor shaft power (hp)	IP65 Max continuous current (A)
H300-03200066A	6.6	1.1	1.5	6.6
H300-03200080A	8	1.5	2	8
H300-03200110A	11	2.2	3	11
H300-03200127A	12.7	3	3	12.7
H300-04200180A	18	4	5	18
H300-04200250A	25	5.5	7.5	22
H300-05200300A	30	7.5	10	30
H300-06200500A	50	11	15	50
H300-06200580A	58	15	20	
H300-07200750A	75	18.5	25	
H300-07200940A	94	22	30	
H300-07201170A	117	30	40	
H300-08201490A	149	37	50	
H300-08201800A	180	45	60	
H300-09202160A	216	55	75	
H300-09202660A	266	75	100	
H300-09202160E	216	55	75	
H300-09202660E	266	75	100	
H300-10203250E	325	90	125	
H300-10203600E	360	110	150	

380/480 Vac ±10%				
Product Code	Normal Duty			
	IP20 Max continuous current (A)	Motor shaft power (kW)	Motor shaft power (hp)	IP65 Max continuous current (A)
H300-03400034A	3.4	1.1	1.5	3.4
H300-03400045A	4.5	1.5	2	4.5
H300-03400062A	6.2	2.2	3	6.2
H300-03400077A	7.7	3	5	7.7
H300-03400104A	10.4	4	5	10.4
H300-03400123A	12.3	5.5	7.5	11
H300-04400185A	18.5	7.5	10	18.5
H300-04400240A	24	11	15	21
H300-05400300A	30	15	20	29
H300-06400380A	38	18.5	25	38
H300-06400480A	48	22	30	48
H300-06400630A	63	30	40	
H300-07400790A	79	37	50	
H300-07400940A	94	45	60	
H300-07401120A	112	55	75	
H300-08401550A	155	75	100	
H300-08401840A	184	90	125	
H300-09402210A	221	110	150	
H300-09402660A	266	132	200	
H300-09402210E	221	110	150	
H300-09402660E	266	132	200	
H300-10403200E	320	160	250	
H300-10403610E	361	200	300	
H300-11404370E	437	225	350	
H300-11404870E	487	250	400	
H300-11405070E	507	280	450	

500/575 Vac ±10%				
Product Code	Normal Duty			
	IP20 Max continuous current (A)	Motor shaft power (kW)	Motor shaft power (hp)	IP65 Max continuous current (A)
H300-05500039A	3.9	2.2	3	3.9
H300-05500061A	6.1	4	5	6.1
H300-05500100A	10	5.5	7.5	10
H300-06500120A	12	7.5	10	12
H300-06500170A	17	11	15	17
H300-06500220A	22	15	20	22
H300-06500270A	27	18.5	25	27
H300-06500340A	34	22	30	34
H300-06500430A	43	30	40	
H300-07500530A	53	37	50	
H300-07500730A	73	45	60	
H300-08500860A	86	55	75	
H300-08501080A	108	75	100	
H300-09501250A	125	90	125	
H300-09501550A	155	110	150	
H300-09501250E	125	90	125	
H300-09501500E	150	110	150	
H300-10502000E	200	130	200	
H300-11502480E	248	175	250	
H300-11502880E	288	225	300	
H300-11503150E	315	250	350	

500/690 Vac ±10%				
Product Code	Normal Duty			
	IP20 Max continuous current (A)	Motor shaft power (kW)	Motor shaft power (hp)	IP65 Max continuous current (A)
H300-07600230A	23	18.5	25	
H300-07600300A	30	22	30	
H300-07600360A	36	30	40	
H300-07600460A	46	37	50	
H300-07600520A	52	45	60	
H300-07600730A	73	55	75	
H300-08600860A	86	75	100	
H300-08601080A	108	90	125	
H300-09601250A	125	110	150	
H300-09601500A	150	132	175	
H300-09601250E	125	110	150	
H300-09601550E	155	132	175	
H300-10601720E	172	160	200	
H300-10601970E	197	185	250	
H300-11602250E	225	200	250	
H300-11602750E	275	250	300	
H300-11603050E	305	280	400	

Product Code**	Frame Size	Heavy Duty					Normal Duty			
		Rated Current (A)	Motor Shaft Power		Peak Current Open Loop (A)	Peak Current RFC (A)	Rated Current (A)	Motor Shaft Power		Peak Current (A)
			(kW)	(HP)				(kW)	(HP)	
380 - 480 V										
M000-12404800T	12	480 *	250	400	672	672	608 *	315	500	668
M000-12405660T	12	566 *	315	450	792	792	660 *	355	550	726
M000-12406600T	12	660 *	355	550	924	924	755 *	400	650	831
M000-12407200T	12	720 *	400	600	1008	1008	865 *	500	700	952
500 - 575 V										
M000-12503150T	12	315 *	250	350	441	441	360 *	250	350	396
M000-12503600T	12	360 *	250	350	504	504	410 *	300	400	451
M000-12504100T	12	410 *	300	400	574	574	460 *	330	450	506
M000-12504600T	12	460 *	330	450	644	644	510 *	370	500	561
500 - 690 V										
M000-12603150T	12	315 *	280	500	441	441	360 *	355	550	396
M000-12603600T	12	360 *	355	550	504	504	410 *	400	600	451
M000-12604100T	12	410 *	400	600	574	574	460 *	450	650	506
M000-12604600T	12	460 *	450	650	644	644	510 *	500	700	561

Notes:
**Frame 12 is only available as an unassigned power module (M000) and an F600 control module must also be ordered
Internal 125 kw brake chopper included as standard.
* Continuous currents at 2 kHz switching frequency
Implement 2.8 MW drive systems by connecting this module in parallel
For more information on these features and the rest of the capabilities of this module. please see the latest issue of the Modular Power brochure

© 2025 Nidec Control Techniques Limited. The information contained in this brochure is for guidance only and does not form part of any contract. The accuracy cannot be guaranteed as Nidec Control Techniques Ltd have an ongoing process of development and reserve the right to change the specification of their products without notice.

Nidec Control Techniques Limited. Registered Office: The Gro, Newtown, Powys SY16 3BE. Registered in England and Wales. Company Reg. No. 01236886