Nidec Drives

# Pump Drive F600

**0.75 kW – 2.8 MW (1.0 - 4,200 hp)**

**200 V | 400 V | 575 V | 690 V**

## Pump Drive F600 Highlights

- Multi-language LCD Keypad
- Dedicated pump functions:
- Low Load Power Saving
- Demand-based sleep mode
- Cascade and Multi-leader control modes for parallel pump systems
- No-flow detection
- Over-cycling protection
- Pipe fill
- Cleaning / de-ragging
- Guided setup screens for pumps within Connect software tool
- Endless flexibility and connectivity via System Integration modules
- Additional features added as standard:
- Sensor-less PM Motor Control
- Conformal coating
- Modbus RTU
- Fire mode

## Key functions

| Function | | Function | |
|---|---|---|---|
| Pump multi-leader mode for up to 3 drives | ✓ | Low DC link operation | ✓ |
| Pump cascade mode for up to 4 assist pumps | ✓ | Analogue inputs | 2 |
| Control mode: Induction motor operation | ✓ | Analogue outputs | 2 |
| Control mode: Permanent magnet motor operation | ✓ | Temperature monitoring | ✓ |
| Pump pipe fill mode | ✓ | Digital inputs | 3 |
| Pump dry well detection | ✓ | Digital I/O programmable | 3 |
| Pump low load detection | ✓ | Relays (normally open/ normally closed) | 2 |
| Pump no-flow detection | ✓ | PID Control | 2 |
| Pump over-cycle protection | ✓ | Energy meter | ✓ |
| Pump cleaning function | ✓ | Trip time stamping | ✓ |
| Hand/Off/Auto control | ✓ | Trip logging | 10 |
| Pump volume monitoring | ✓ | Run time log | ✓ |
| Pump flow monitoring | ✓ | Control word control | ✓ |
| Pump Wake/sleep operation | ✓ | Auto reset | ✓ |
| Pump flow switch input | ✓ | Cloning | ✓ |
| Pump assist over-cycle detection | ✓ | SD card adapter | ✓ |
| Auto-tune static | ✓ | SMARTCARD | ✓ |
| Stop mode: Coast | ✓ | On-board PLC | 64 kB |
| Stop mode: Fast ramp | | Acceleration rates | 4 |
| Motor pre-heat mode | ✓ | Deceleration rates | 4 |
| Bi-polar reference | ✓ | Fire Mode configurable over-ride function | ✓ |
| Skip frequencies | ✓ | Guided set-up via 'Connect' commissioning software | ✓ |
| Skip frequency dead bands | ✓ | Sleep Mode | ✓ |
| HMI support | ✓ | Supply loss detection | ✓ |

Nidec Drives

# Specification

| F600 | |
|---|---|
| **Items supplied with the drive** | Step-By-Step Guide, safety information, grounding bracket, grounding clamp, DC terminal cover grommets, terminal nuts, supply and motor connector, surface mounting brackets, control terminals, relay connectors, 24Vpower supply connector and finger guard grommets |
| **Storage temperature** | -40°C to 55°C, -40°F to 131°F |
| **Operating temperature without de-rate** | -20°C to 40°C, -4°F to 104°F |
| **Operating temperature with de-rate** | 40°C to 55°C, 104°F to 131°F |
| Supply requirements | Maximum supply imbalance: 2 % negative phase sequence (equivalent to 3 % voltage imbalance between phases). Input frequency 45 to 66Hz |
| Switching frequency range | 2,3,4,6,8,12,16kHz (Factory default = 3kHz) |
| Approvals | CE (European Union), cUL Listed (USA and Canada), RCM (Australia/ New Zealand), EAC (Russian Customs Union), UKCA |
| Product safety standard | EN61800-5-1 |
| Functional safety | Single STO Function |
| Altitude | 1000m – No de-rate. 1000m to 3000m - 1% de-rate/100m |
| Humidity | 95% Non-condensing |
| Pollution | Degree 2. Dry, non-conducting pollution only |
| IP Rating | IP20 / NEMA1 / UL Type 1 |
| Vibration | Reference standard IEC60068-2-29 bump test, IEC60068-2-64 random vibration test, IEC60068-2-6, EN61800-5-1 sinusoidal vibration test. |
| Mounting methods | Surface mount or through-panel mount via mounting brackets |
| Output frequency/speed range | 599Hz |
| Braking | In-built braking transistor, external resistor required. |
| Operating modes | Open Loop Induction Motor V/F, RFC-A (sensorless induction motor) RFC-S (Sensorless, and feedback via option module) |
| Overload capability | 110% for 165s from cold or for 9s from 100% load |
| Overvoltage category | Evaluated for OVC III. |

| | |
|---|---|
| Corrosive environments | Concentrations not exceeding levels set in:<br>EN 50178:1998 Table A2<br>IEC 60721-3-3 Class 3C2 |
| Immunity Compliance | IEC61800-3, EN60800-6-2, IEC 61000-4-2, IEC 61000-4-3, IEC61000-4-4, IEC61000-4-5, IEC61000-4-6, IEC61000-4-11, IEC61000-6-1, IEC 61000-6-2. |
| Emission compliance | Capable of meeting the requirements of Equipment Category C3 without external filters or line reactors. Capable of meeting the requirements of Equipment Category C2 when installed with the recommended filters and line reactors.<br>IEC61800-3, EN61000-6-4, EN61000-3-2, EN61000-3-12, EN61000-3-3, EN12015 |
| Cooling | Forced cooled |
| Safe Torque off | Single STO. SIL 3 |
| Communications | RS485 with Modbus RTU<br>EtherNet/IP, EtherCAT, PROFIBUS, PROFINET, DeviceNET, POWERLINK and CANopen via option modules |
| Control I/O | 2 x analogue input, 2 x analogue outputs, 3 x Digital I/O programmable, 3 x Digital input, 2 x NO relay 250Vac Max., 5 x 0V common, 1 x 24V user output, 1 x 24V external input, 1 x STO input.<br>Additional I/O available with SI-I/O option module. |
| Accuracy | Frequency 0.01%, Analogue input 1 and 2: 11 bits plus sign,<br>Current accuracy typical 2%. |
| On-Board user program capability | 64kB, IEC 61131-3 compliant |
| Keypad (LCD) | KI- HOA keypad RTC (real time clock), optional HOA Remote Keypad |
| PC Tools | 'Connect' commissioning and cloning tool including CT Oscilloscope, Machine Control Studio for second processor module programming. |
| Warranty | 5 Years (warranty terms and conditions apply) |
| Supported options | HMI, Remote Keypad RTC, SI-I/O, Remote I/O, SI-Encoder (speed feedback), SI-Universal Encoder, MCi200 (second processor), MCi210 (second processor), SI-Ethernet, SI-EtherCAT, SI-DeviceNET, SI-PROFIBUS, SI-PROFINET, SI-POWERLINK, SI-CANopen, KI-485 comms adapter, SD card adapter, SMARTCARD |
| Accessories | Through-hole IP65 (frame 3 to 8) or IP55 (frame 9 to 11) mounting kits, UL type conduit kits, retrofit mounting brackets, external EMC filters and grounding bracket (supplied with the drive) |

## Documentation & Downloads

Product documentation and PC tools available for download from:
**www.controltechniques.com/support**

# Dimensions

| Frame Size | Overall Dimensions | | | | | | Mounting Dimensions | | | | Mounting Hole Diameter | | Weight | |
|---|---|---|---|---|---|---|---|---|---|---|---|---|---|---|
| | mm | | | in | | | mm | | in | | mm | in | kg | lb |
| | H | W | D | H | W | D | H | W | H | W | | | | |
| 3 | 382 | 83 | 200 | 15.03 | 3.26 | 7.87 | 365 | 73 | 14.37 | 2.87 | 5.5 | 0.21 | 4.5 | 9.92 |
| 4 | 391 | 124 | 200 | 15.39 | 4.88 | 7.87 | 365 | 106 | 14.37 | 4.17 | 6.5 | 0.26 | 6.5 | 14.33 |
| 5 | 391 | 143 | 200 | 15.39 | 5.63 | 7.87 | 365 | 106 | 14.37 | 4.17 | 6.5 | 0.26 | 7.4 | 16.3 |
| 6 | 391 | 210 | 287 | 15.39 | 8.27 | 11.29 | 365 | 196 | 14.37 | 7.72 | 7 | 0.28 | 14 | 30.9 |
| 7 | 552 | 270 | 280 | 21.73 | 10.63 | 11.02 | 508 | 220 | 20 | 8.66 | 9 | 0.35 | 28 | 61.70 |
| 8 | 804 | 310 | 290 | 31.65 | 12.21 | 11.42 | 753 | 259 | 29.64 | 10.20 | 9 | 0.35 | 52 | 114.6 |
| 9A | 1108 | 320 | 290 | 43.62 | 12.59 | 11.42 | 1049 | 259 | 41.29 | 10.20 | 9 | 0.35 | 46 | 101.4 |
| 9E and 10E | 1069 | 310 | 290 | 42.08 | 12.21 | 11.42 | 1010 | 259 | 39.76 | 10.20 | 9 | 0.35 | 46 | 101.4 |
| 11E | 1242 | 310 | 313 | 48.89 | 12.21 | 12.32 | 1189 | 259 | 46.81 | 10.20 | 9 | 0.35 | 63 | 138.8 |
| 12 | 1750 | 295 | 526 | 68.90 | 11.61 | 20.71 | N/A | N/A | N/A | N/A | N/A | N/A | 130 | 287 |

# Connections

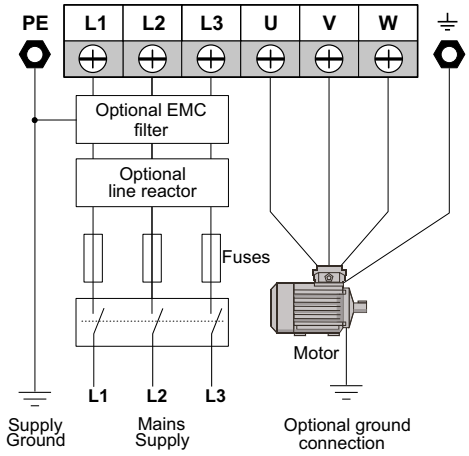


**Typical Power Connections**

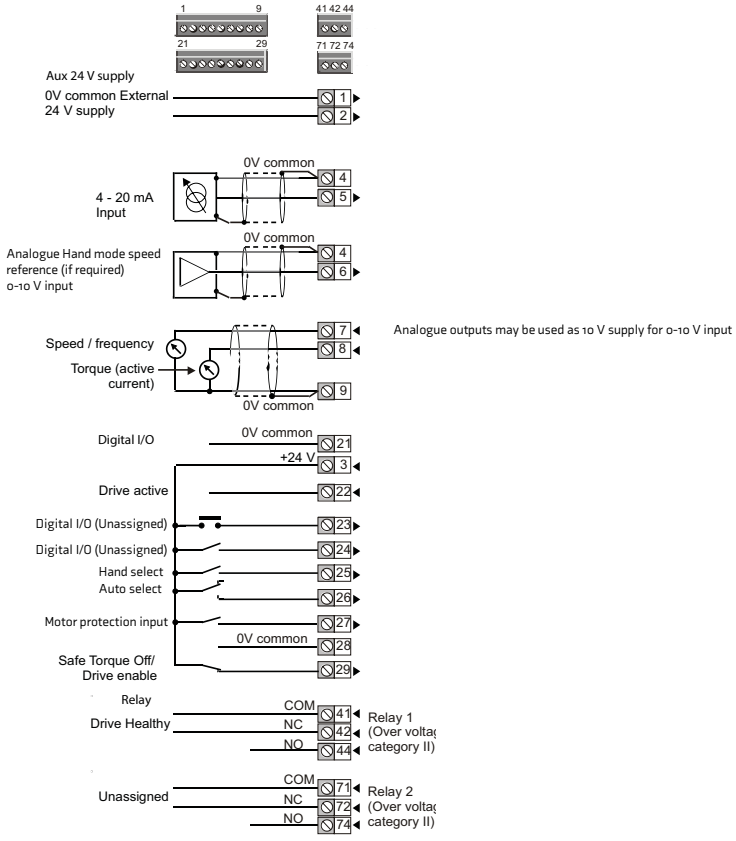


**Default Control Connections**

Nidec Drives

# Product Code Structure

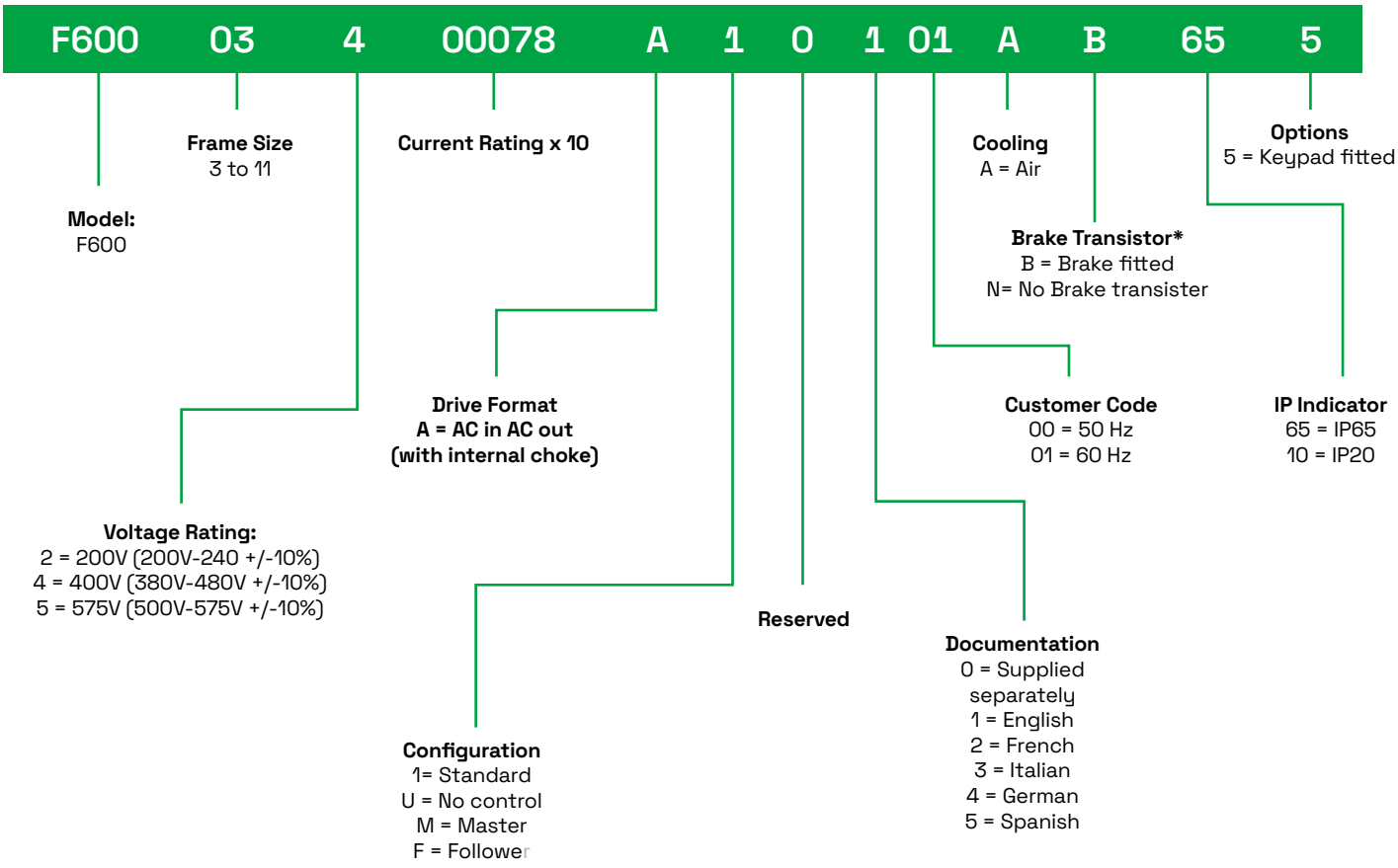


*B only for frames 3 – 8. N only for frames 9 – 11.

## Manuals

F600 is supplied with a Step-by-Step Setup Guide to assist with fast, efficient commissioning. A detailed user guide is also available to download online, or can be requested from Control Techniques Drive Centres and Partners.

# Model number and ratings

| 200/240 Vac ±10% | | | |
|---|---|---|---|
| Product Code | Normal Duty | | |
| | IP20 Max continuous current (A) | Motor shaft power (kW) | Motor shaft power (hp) |
| F600-03200066A | 6.6 | 1.1 | 1.5 |
| F600-03200080A | 8 | 1.5 | 2 |
| F600-03200110A | 11 | 2.2 | 3 |
| F600-03200127A | 12.7 | 3 | 3 |
| F600-04200180A | 18 | 4 | 5 |
| F600-04200250A | 25 | 5.5 | 7.5 |
| F600-05200300A | 30 | 7.5 | 10 |
| F600-06200500A | 50 | 11 | 15 |
| F600-06200580A | 58 | 15 | 20 |
| F600-07200750A | 75 | 18.5 | 25 |
| F600-07200940A | 94 | 22 | 30 |
| F600-07201170A | 117 | 30 | 40 |
| F600-08201490A | 149 | 37 | 50 |
| F600-08201800A | 180 | 45 | 60 |
| F600-09202160A | 216 | 55 | 75 |
| F600-09202660A | 266 | 75 | 100 |
| F600-09202160E | 216 | 55 | 75 |
| F600-09202660E | 266 | 75 | 100 |
| F600-10203250E | 325 | 90 | 125 |
| F600-10203600E | 360 | 110 | 150 |

| 380/480 Vac ±10% | | | |
|---|---|---|---|
| Product Code | Normal Duty | | |
| | IP20 Max continuous current (A) | Motor shaft power (kW) | Motor shaft power (hp) |
| F600-03400034A | 3.4 | 1.1 | 1.5 |
| F600-03400045A | 4.5 | 1.5 | 2 |
| F600-03400062A | 6.2 | 2.2 | 3 |
| F600-03400077A | 7.7 | 3 | 5 |
| F600-03400104A | 10.4 | 4 | 5 |
| F600-03400123A | 12.3 | 5.5 | 7.5 |
| F600-04400185A | 18.5 | 7.5 | 10 |
| F600-04400240A | 24 | 11 | 15 |
| F600-05400300A | 30 | 15 | 20 |
| F600-06400380A | 38 | 18.5 | 25 |
| F600-06400480A | 48 | 22 | 30 |
| F600-06400630A | 63 | 30 | 40 |
| F600-07400790A | 79 | 37 | 50 |
| F600-07400940A | 94 | 45 | 60 |
| F600-07401120A | 112 | 55 | 75 |
| F600-08401550A | 155 | 75 | 100 |
| F600-08401840A | 184 | 90 | 125 |
| F600-09402210A | 221 | 110 | 150 |
| F600-09402660A | 266 | 132 | 200 |
| F600-09402210E | 221 | 110 | 150 |
| F600-09402660E | 266 | 132 | 200 |
| F600-10403200E | 320 | 160 | 250 |
| F600-10403610E | 361 | 200 | 300 |
| F600-11404370E | 437 | 225 | 350 |
| F600-11404870E | 487 | 250 | 400 |
| F600-11405070E | 507 | 280 | 450 |

| 500/575 Vac ±10% | | | |
|---|---|---|---|
| Product Code | Normal Duty | | |
| | IP20 Max continuous current (A) | Motor shaft power (kW) | Motor shaft power (hp) |
| F600-05500039A | 3.9 | 2.2 | 3 |
| F600-05500061A | 6.1 | 4 | 5 |
| F600-05500100A | 10 | 5.5 | 7.5 |
| F600-06500120A | 12 | 7.5 | 10 |
| F600-06500170A | 17 | 11 | 15 |
| F600-06500220A | 22 | 15 | 20 |
| F600-06500270A | 27 | 18.5 | 25 |
| F600-06500340A | 34 | 22 | 30 |
| F600-06500430A | 43 | 30 | 40 |
| F600-07500530A | 53 | 37 | 50 |
| F600-07500730A | 73 | 45 | 60 |
| F600-08500860A | 86 | 55 | 75 |
| F600-08501080A | 108 | 75 | 100 |
| F600-09501250A | 125 | 90 | 125 |
| F600-09501550A | 155 | 110 | 150 |
| F600-09501250E | 125 | 90 | 125 |
| F600-09501500E | 150 | 110 | 150 |
| F600-10502000E | 200 | 130 | 200 |
| F600-11502480E | 248 | 175 | 250 |
| F600-11502880E | 288 | 225 | 300 |
| F600-11503150E | 315 | 250 | 350 |

| 500/690 Vac ±10% | | | |
|---|---|---|---|
| Product Code | Normal Duty | | |
| | IP20 Max continuous current (A) | Motor shaft power (kW) | Motor shaft power (hp) |
| F600-07600230A | 23 | 18.5 | 25 |
| F600-07600300A | 30 | 22 | 30 |
| F600-07600360A | 36 | 30 | 40 |
| F600-07600460A | 46 | 37 | 50 |
| F600-07600520A | 52 | 45 | 60 |
| F600-07600730A | 73 | 55 | 75 |
| F600-08600860A | 86 | 75 | 100 |
| F600-08601080A | 108 | 90 | 125 |
| F600-09601250A | 125 | 110 | 150 |
| F600-09601500A | 150 | 132 | 175 |
| F600-09601250E | 125 | 110 | 150 |
| F600-09601550E | 155 | 132 | 175 |
| F600-10601720E | 172 | 160 | 200 |
| F600-10601970E | 197 | 185 | 250 |
| F600-11602250E | 225 | 200 | 250 |
| F600-11602750E | 275 | 250 | 300 |
| F600-11603050E | 305 | 280 | 400 |

| Product Code** | Frame Size | Heavy Duty | | | | | Normal Duty | | | |
|---|---|---|---|---|---|---|---|---|---|---|
| | | Rated Current (A) | Motor Shaft Power | | Peak Current Open Loop (A) | Peak Current RFC (A) | Rated Current (A) | Motor Shaft Power | | Peak Current (A) |
| | | | (kW) | (HP) | | | | (kW) | (HP) | |
| 380 - 480 V | | | | | | | | | | |
| M000-12404800T | 12 | 480 * | 250 | 400 | 672 | 672 | 608 * | 315 | 500 | 668 |
| M000-12405660T | 12 | 566 * | 315 | 450 | 792 | 792 | 660 * | 355 | 550 | 726 |
| M000-12406600T | 12 | 660 * | 355 | 550 | 924 | 924 | 755 * | 400 | 650 | 831 |
| M000-12407200T | 12 | 720 * | 400 | 600 | 1008 | 1008 | 865 * | 500 | 700 | 952 |
| 500 - 575 V | | | | | | | | | | |
| M000-12503150T | 12 | 315 * | 250 | 350 | 441 | 441 | 360 * | 250 | 350 | 396 |
| M000-12503600T | 12 | 360 * | 250 | 350 | 504 | 504 | 410 * | 300 | 400 | 451 |
| M000-12504100T | 12 | 410 * | 300 | 400 | 574 | 574 | 460 * | 330 | 450 | 506 |
| M000-12504600T | 12 | 460 * | 330 | 450 | 644 | 644 | 510 * | 370 | 500 | 561 |
| 500 - 690 V | | | | | | | | | | |
| M000-12603150T | 12 | 315 * | 280 | 500 | 441 | 441 | 360 * | 355 | 550 | 396 |
| M000-12603600T | 12 | 360 * | 355 | 550 | 504 | 504 | 410 * | 400 | 600 | 451 |
| M000-12604100T | 12 | 410 * | 400 | 600 | 574 | 574 | 460 * | 450 | 650 | 506 |
| M000-12604600T | 12 | 460 * | 450 | 650 | 644 | 644 | 510 * | 500 | 700 | 561 |

Notes:
* Continuous currents at 2 kHz switching frequency
**Frame 12 is only available as an unassigned power module (M000) and an F600 control module must also be ordered
Internal 125 kw brake chopper included as standard.
Implement 2.8 MW drive systems by connecting this module in parallel
For more information on these features and the rest of the capabilities of this module. please see the latest issue of the Modular Power brochure

© 2025 Nidec Control Techniques Limited. The information contained in this brochure is for guidance only and does not form part of any contract. The accuracy cannot be guaranteed as Nidec Control Techniques Ltd have an ongoing process of development and reserve the right to change the specification of their products without notice.

Nidec Control Techniques Limited. Registered Office: The Gro, Newtown, Powys SY16 3BE. Registered in England and Wales. Company Reg. No. 01236886